CASTLE 360EX

360mm Liquid CPU Cooler

DeepCool

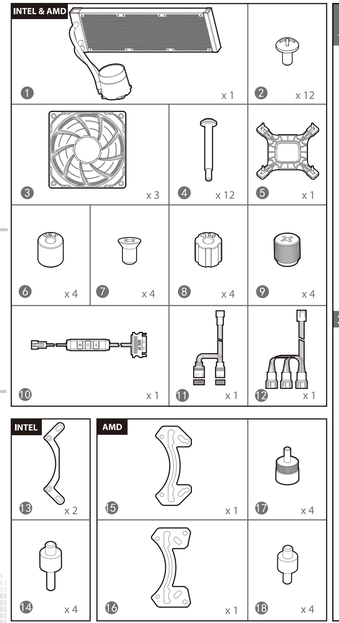

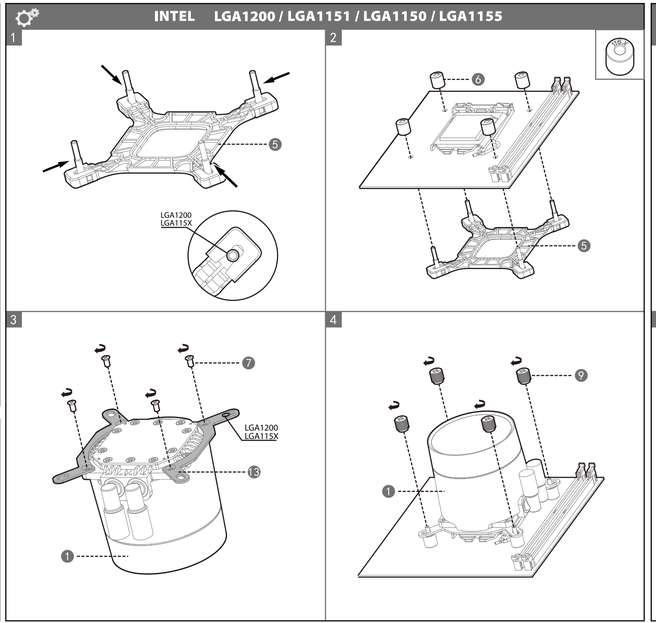

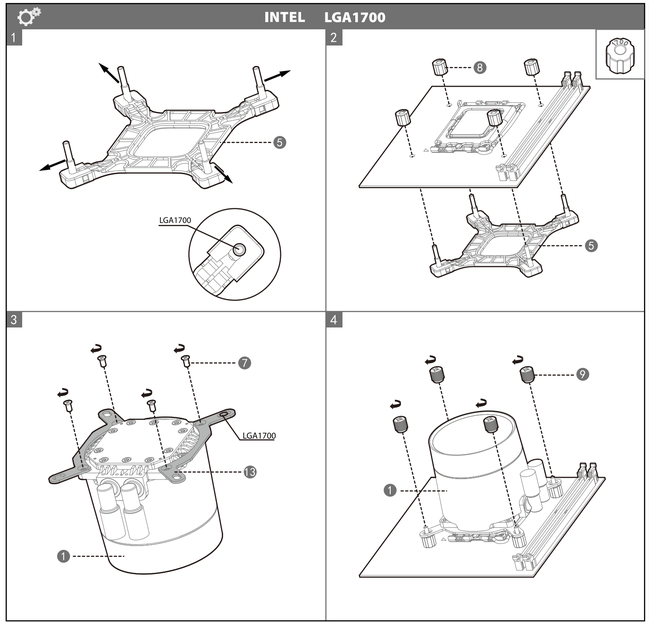

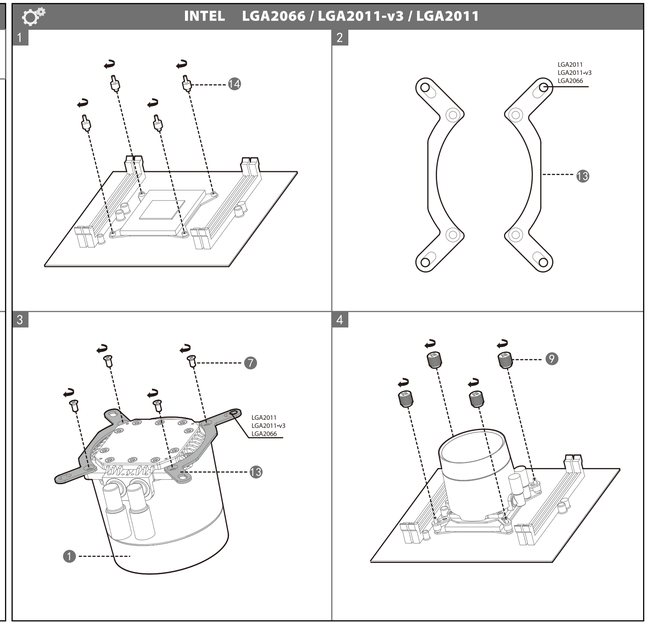

DeepCool USA Inc.
11650 Mission Park Drive Suite 108, Rancho Cucamonga, CA 91730
Beijing DeepCool Industries Co., Ltd.
Building 10, No. 9 Dijin Road Haidian District, Beijing 100095, China
© 2021 Beijing DeepCool Industries Co., Ltd. All rights reserved.
"DeepCool" and other commercial identities are legitimate registered trademarks and commercial identities of the trademarks owner and its affiliates in China and other countries or regions.
Pictures on this package are for reference only, please refer to the actual product.

EN	For more information, please check our website at: www.deepcool.com
DE	Für weitere Informationen besuchen Sie bitte unsere Website unter: www.deepcool.com
FR	Pour plus d'informations, merci de visiter notre site internet: www.deepcool.com
ES	Para más información, por favor visite nuestra página en: www.deepcool.com
IT	Per ulteriori informazioni, visitate il nostro sito web: www.deepcool.com
PT	Para mais informação, visite o nosso website em: www.deepcool.com
PL	Więcej informacji można znaleźć na naszej stronie internetowej: www.deepcool.com
RU	Больше информации на сайте: www.deepcool.com
JA	詳細は、ウェブ上で、以下の取り扱いをご覧ください: www.deepcool.com
XO	对相关信息请访问: www.deepcool.com 或有关信息请访问: www.deepcool.com
AR	www.deepcool.com ,,Jc Luaga ojlj ,,Jc ,,Jcgiaoll ,,Jo ,,Jlall
ZH	如需要更多信息，请浏览网站: www.deepcool.com

AMD AM4

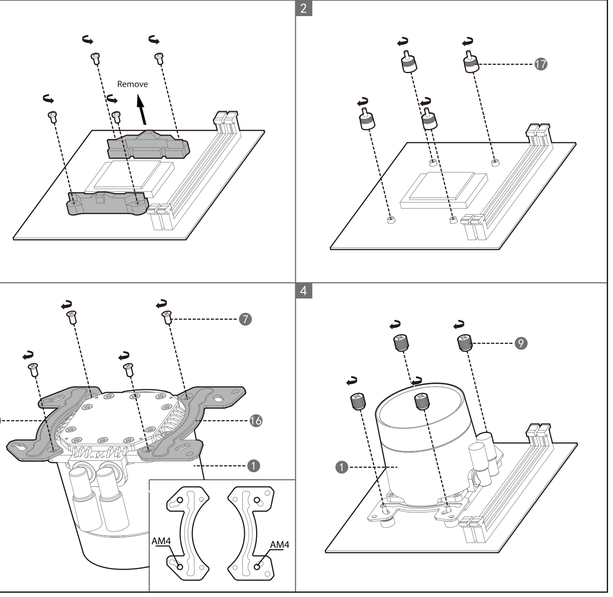

AMD TRX4/TR4

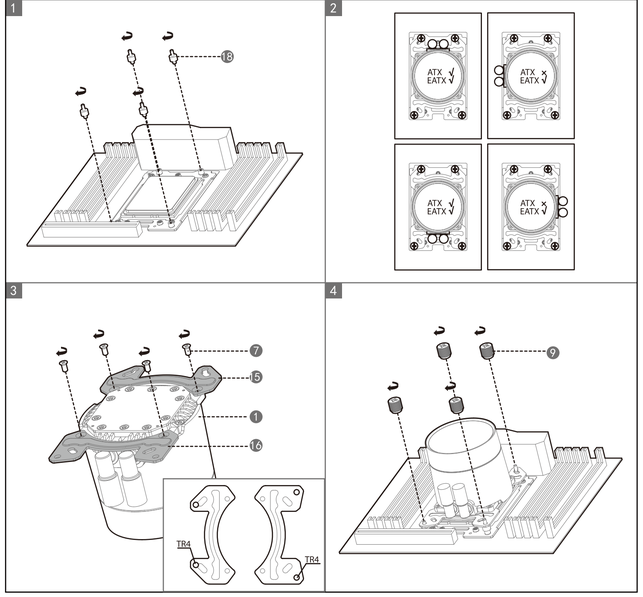

Fan & Radiator

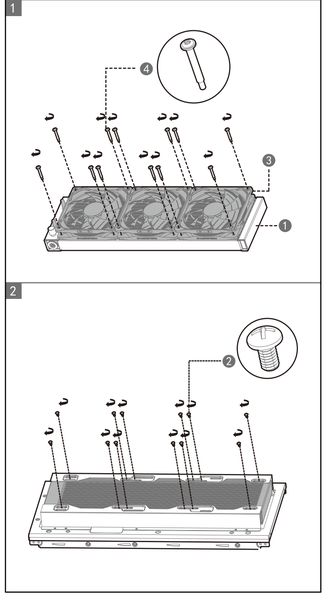

LOGO

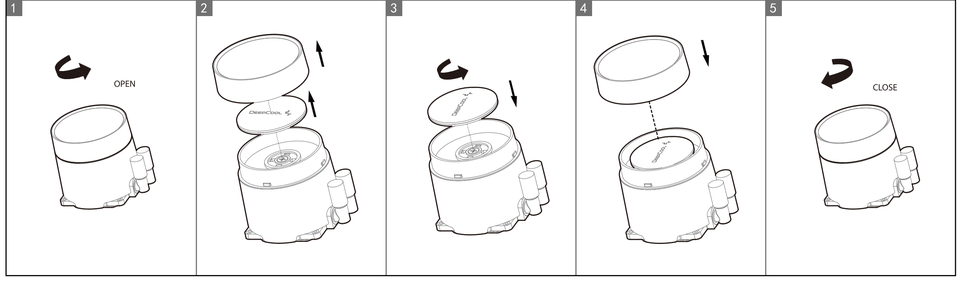

Connection

