STEP by STEP INSTALLATION GUIDE



GAMDIAS

BOREAS | E1 410WH

CPU Air Cooler

GAMDIAS

BOREAS | E1 410

CPU Air Cooler

Package Contents

A

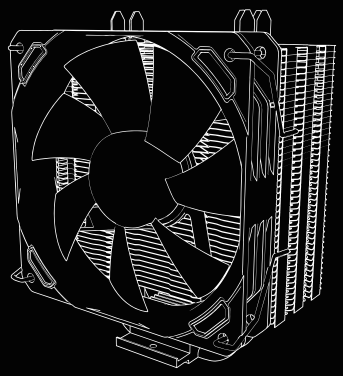

×1

E

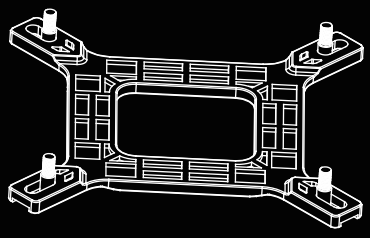

×1

B

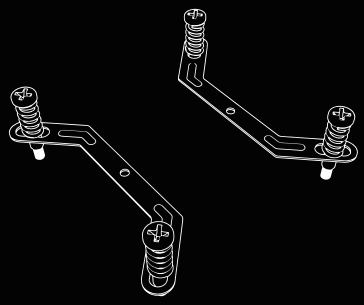

×1

F



×4

C

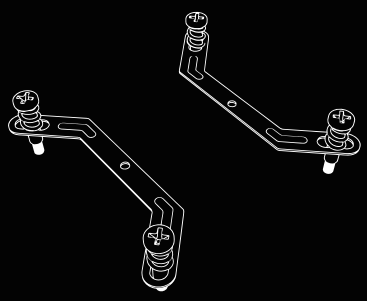

×1

G

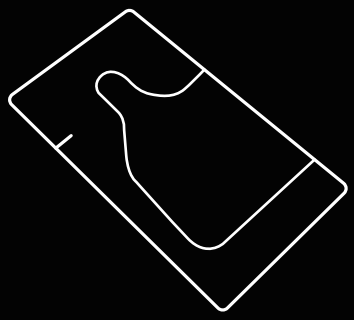

×1

D

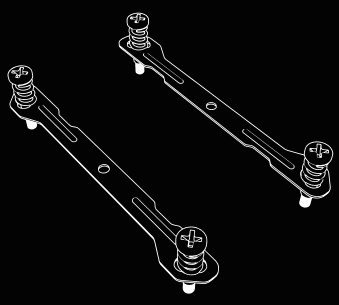

×1

INTEL / AMD

1 Turn off the computer before installing

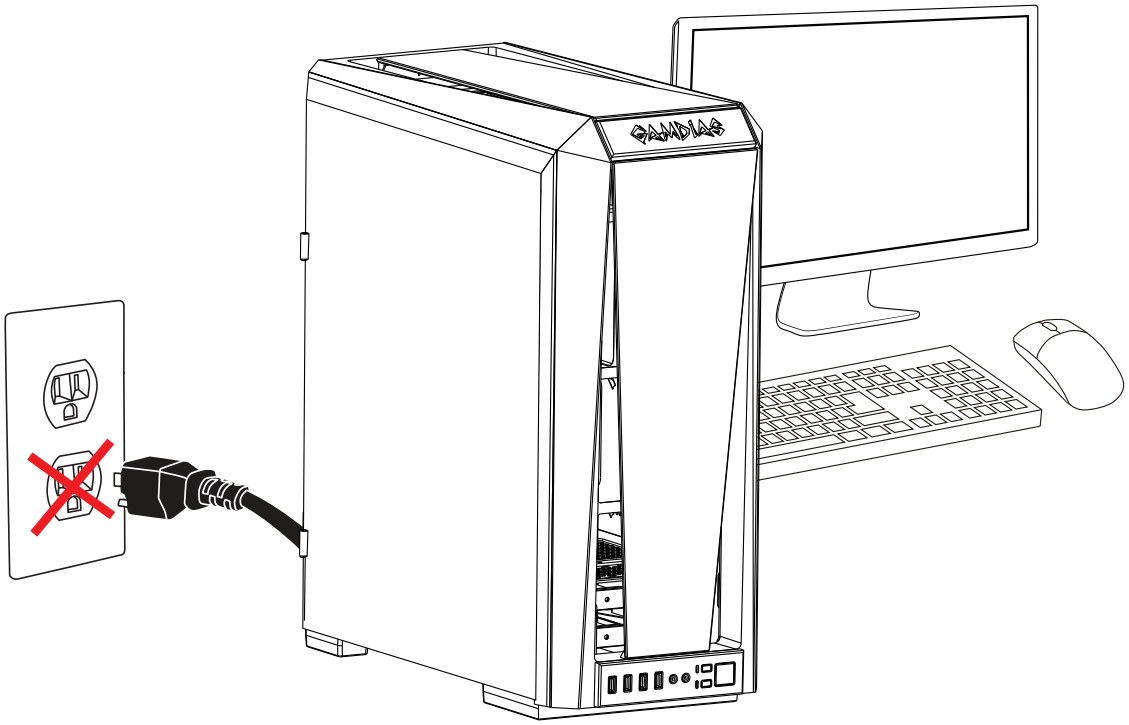

2

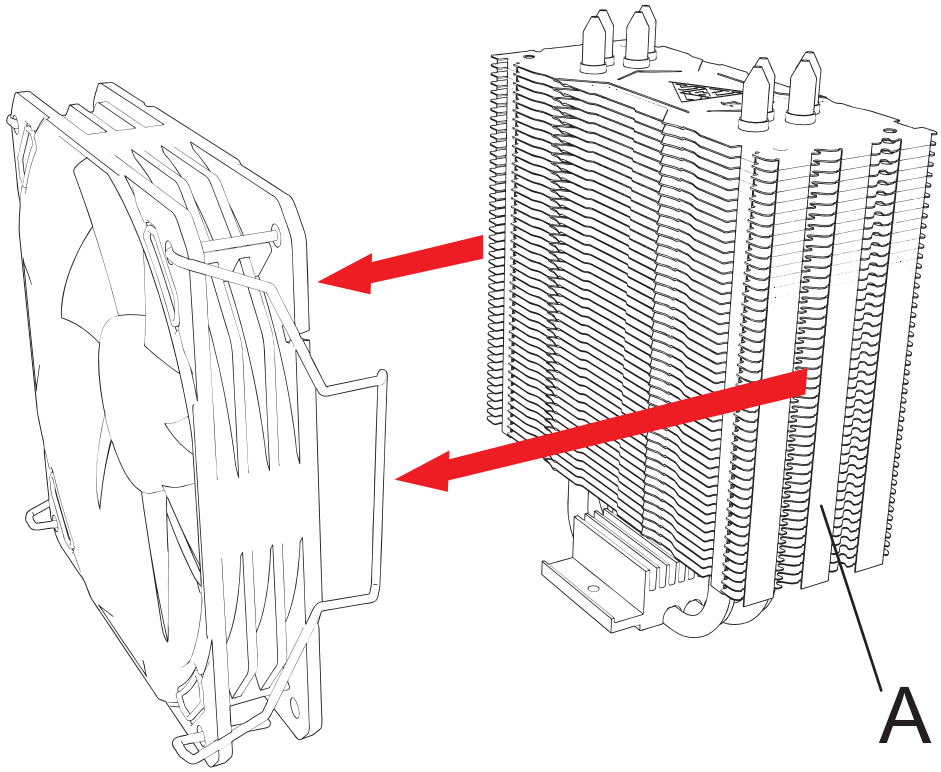

3

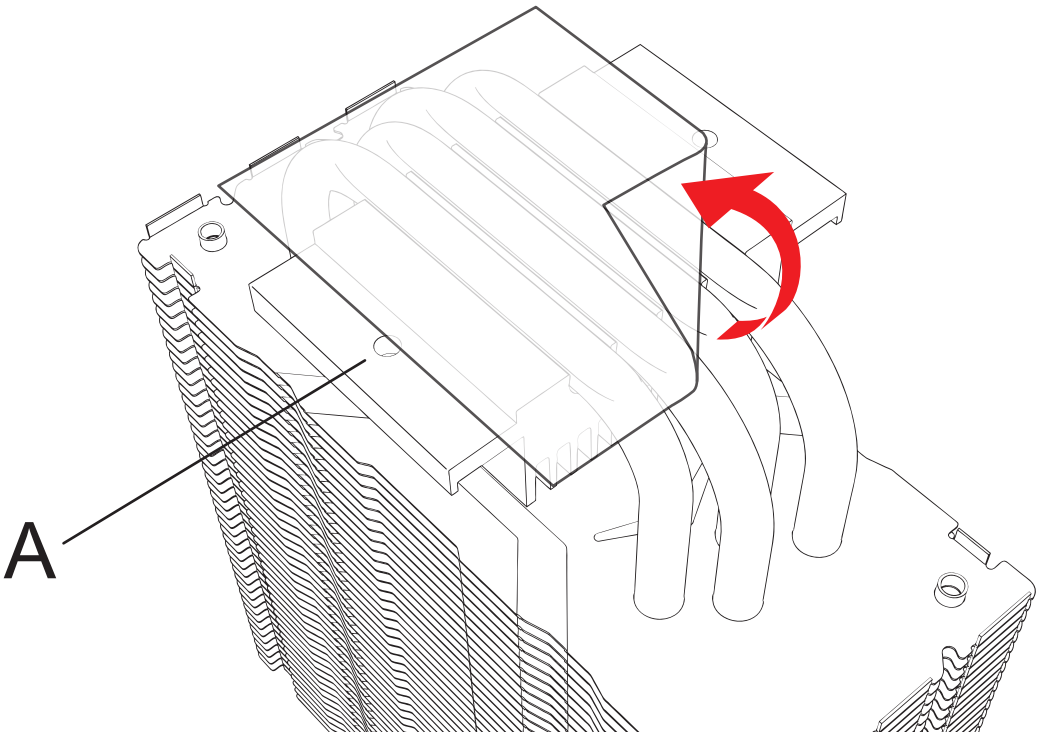

4

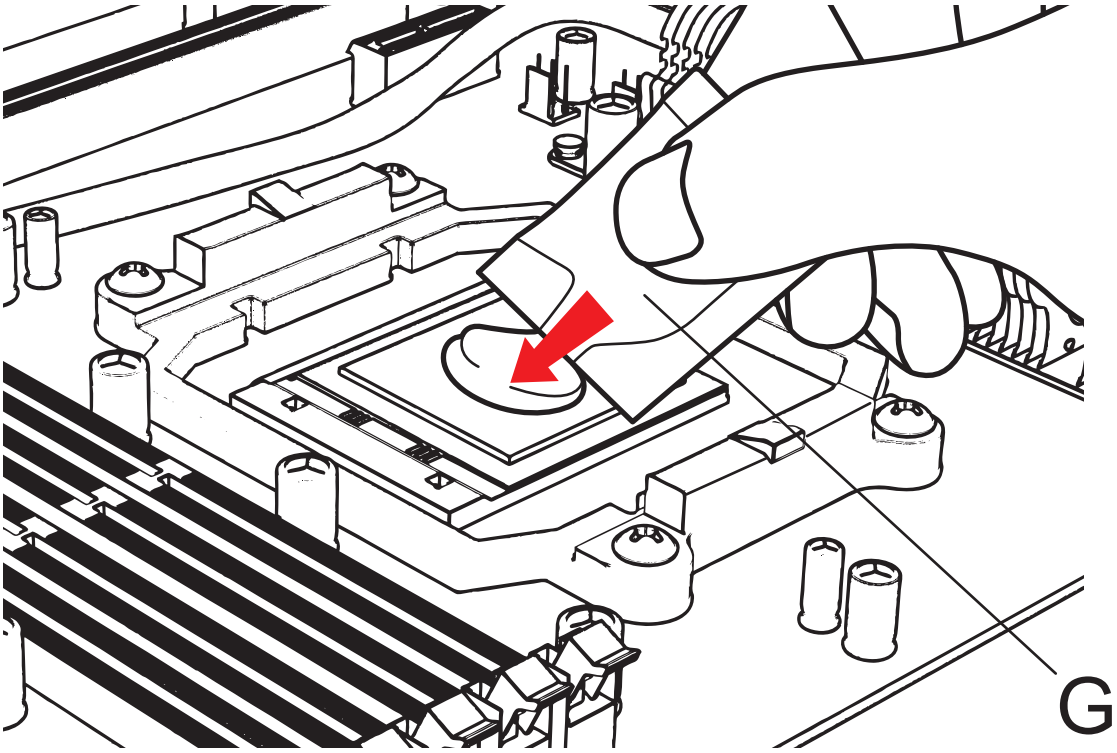

INTEL (LGA1366 / 1200 / 115X / 775)

5

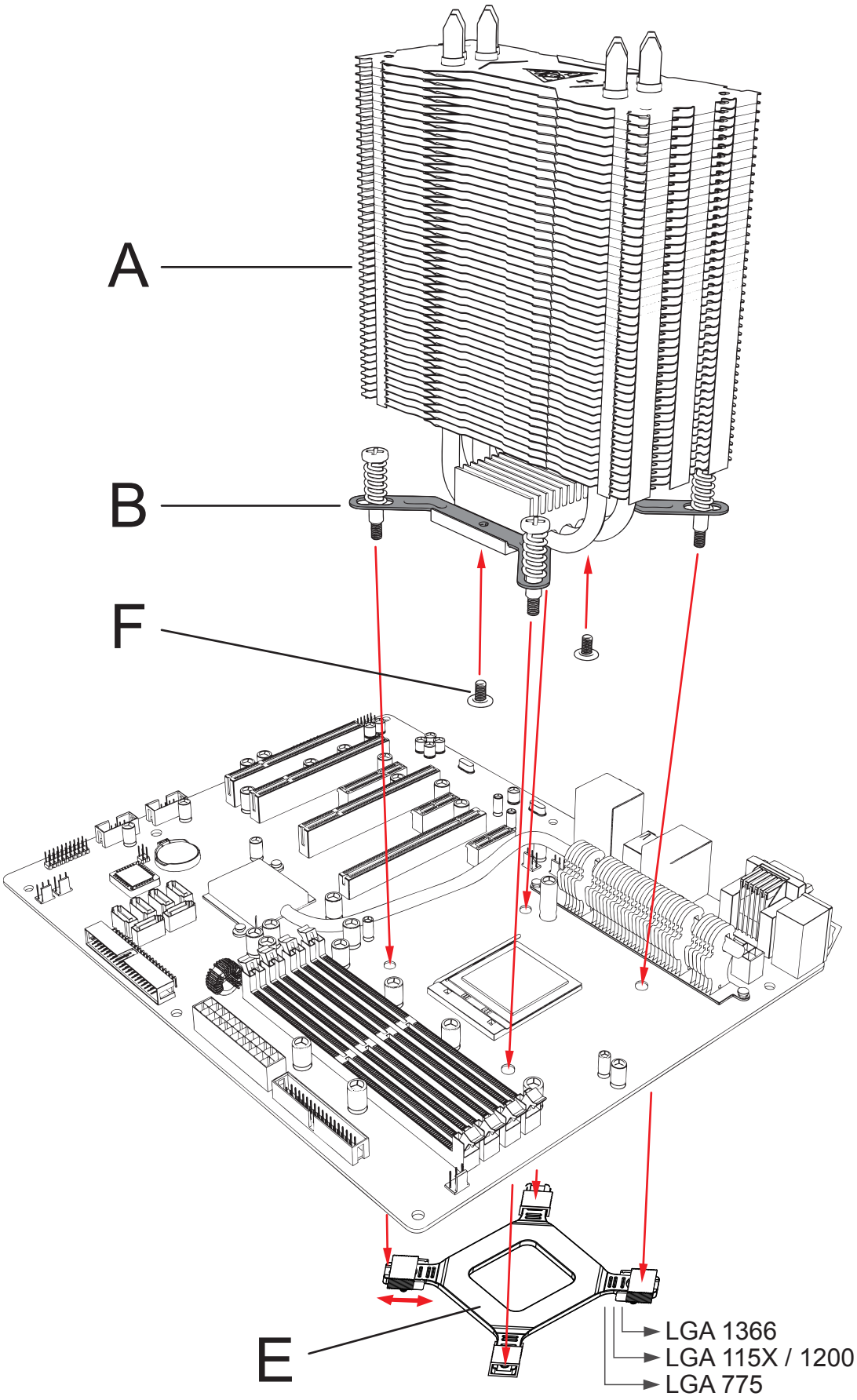

INTEL (LAG2066 / 2011 / 2011-3)

5

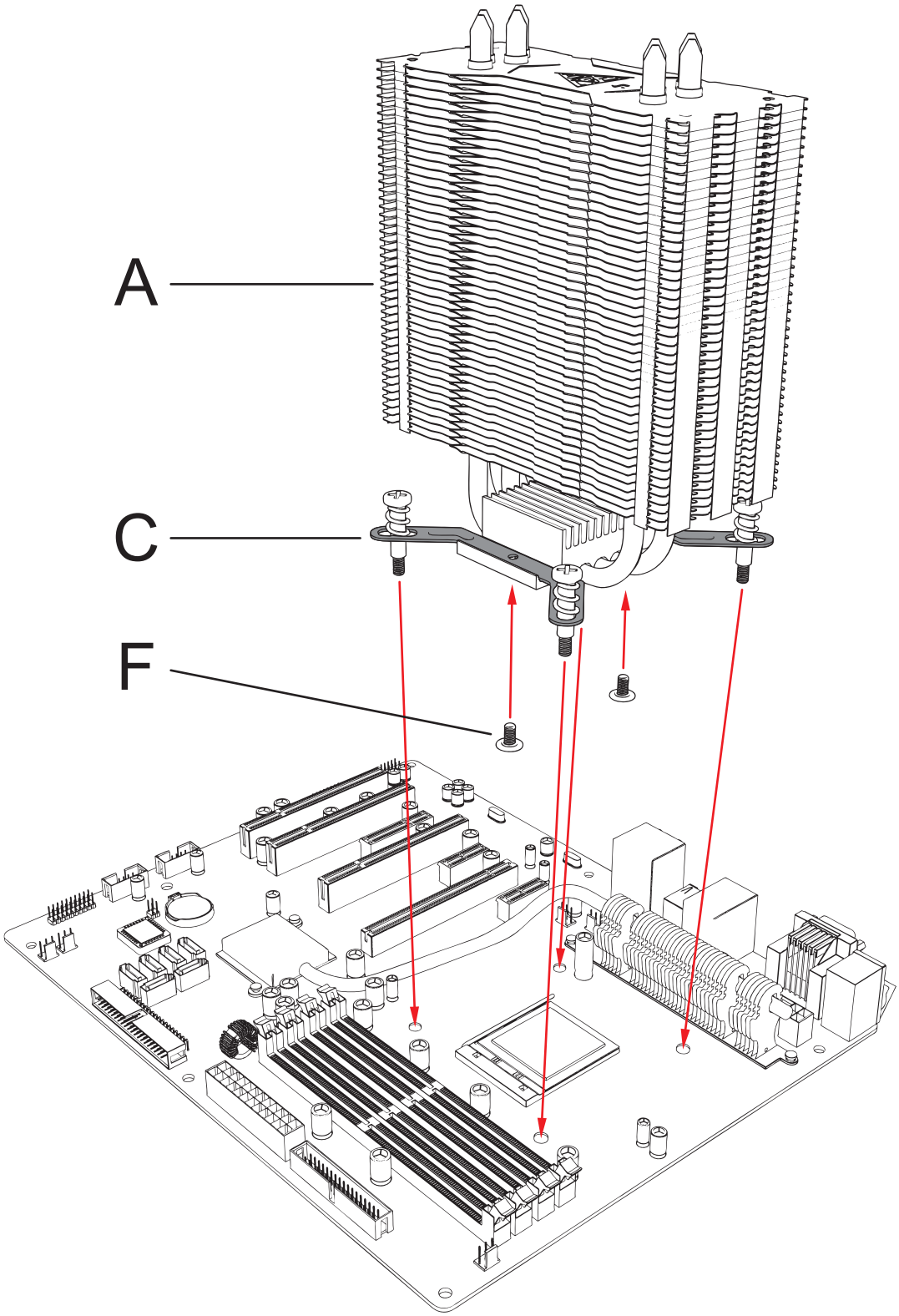

AMD (AM4 / AM3+ / AM3 / AM2+ / AM2 / FM2+ / FM2 / FM1)

5

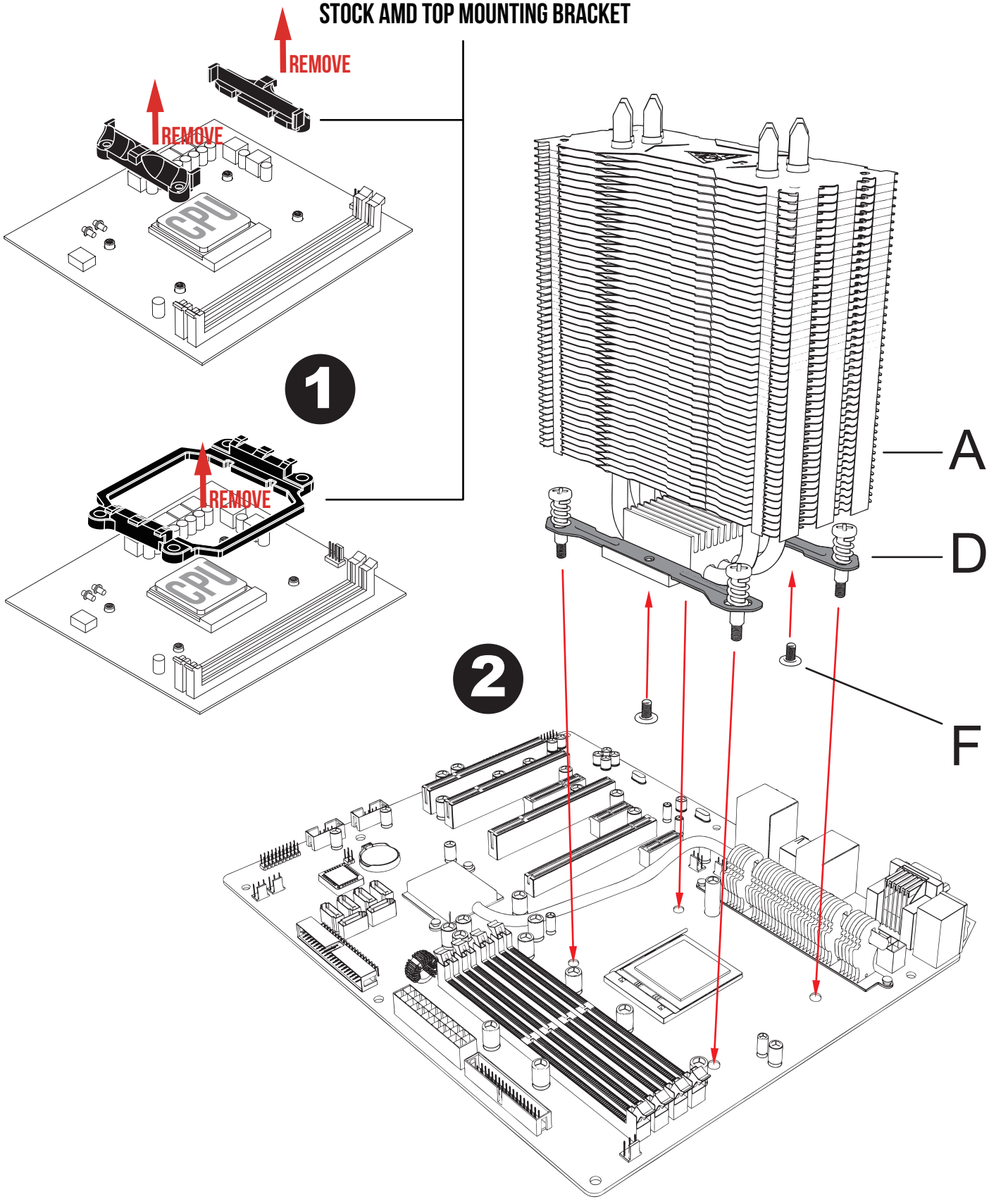

6

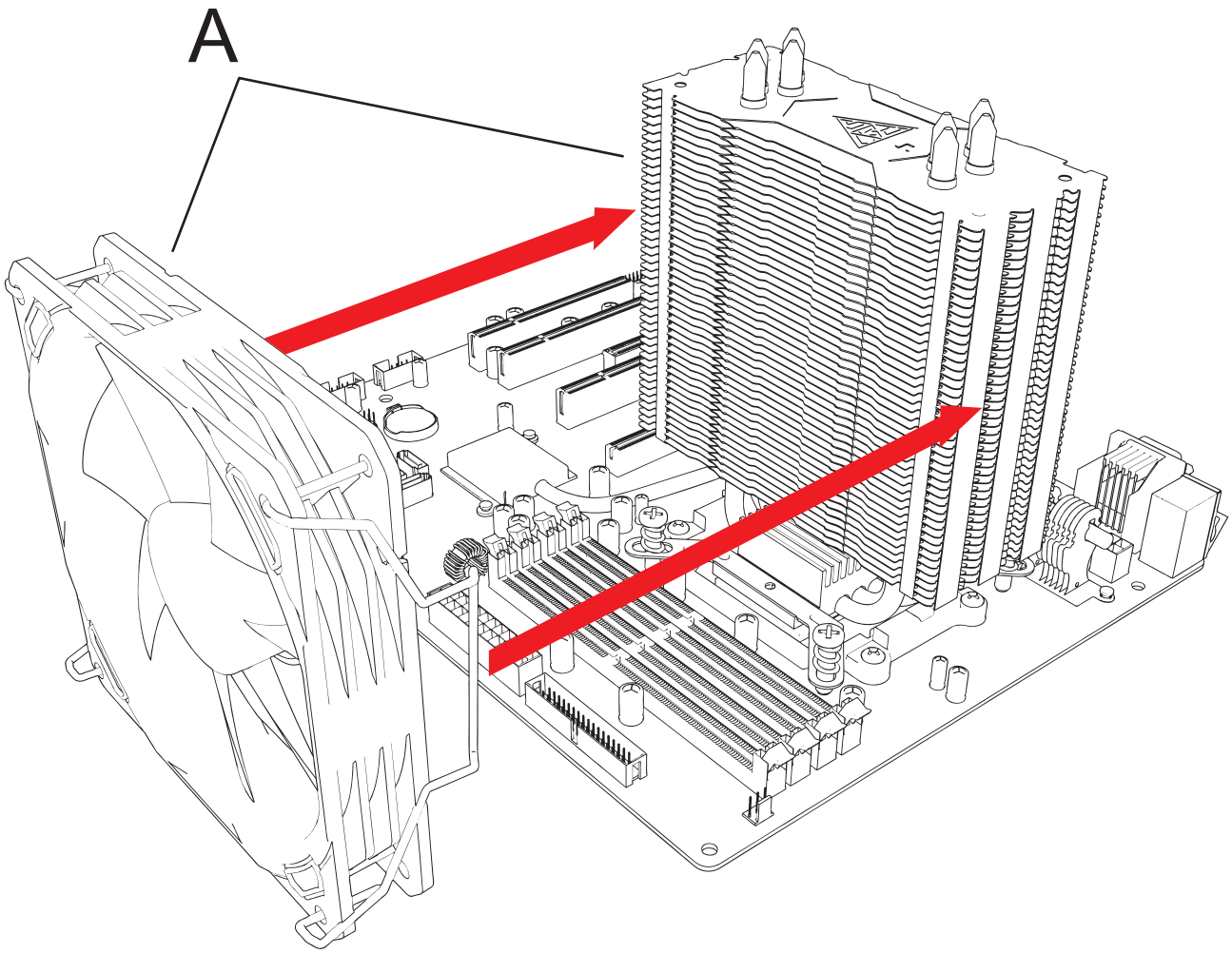

7

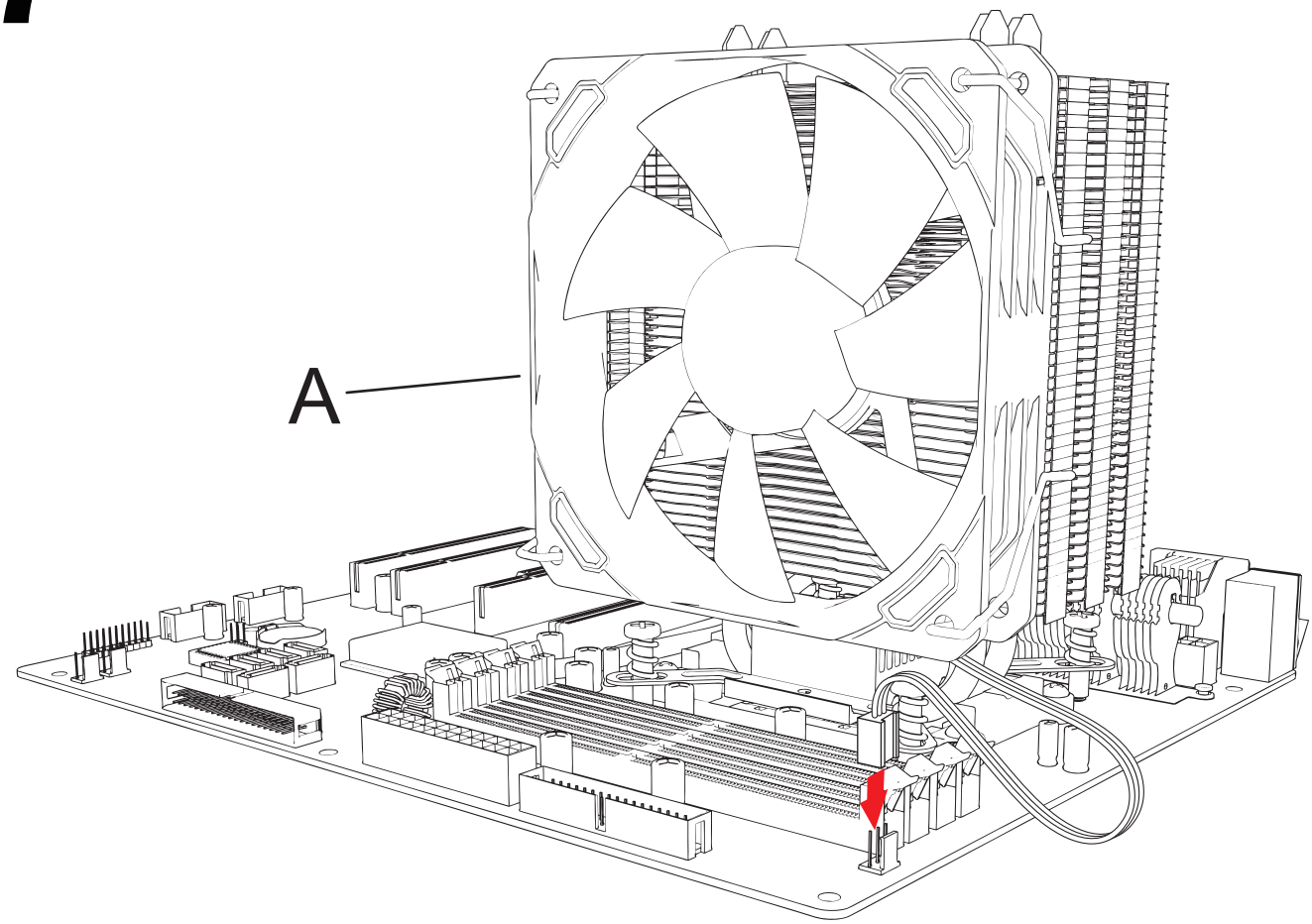

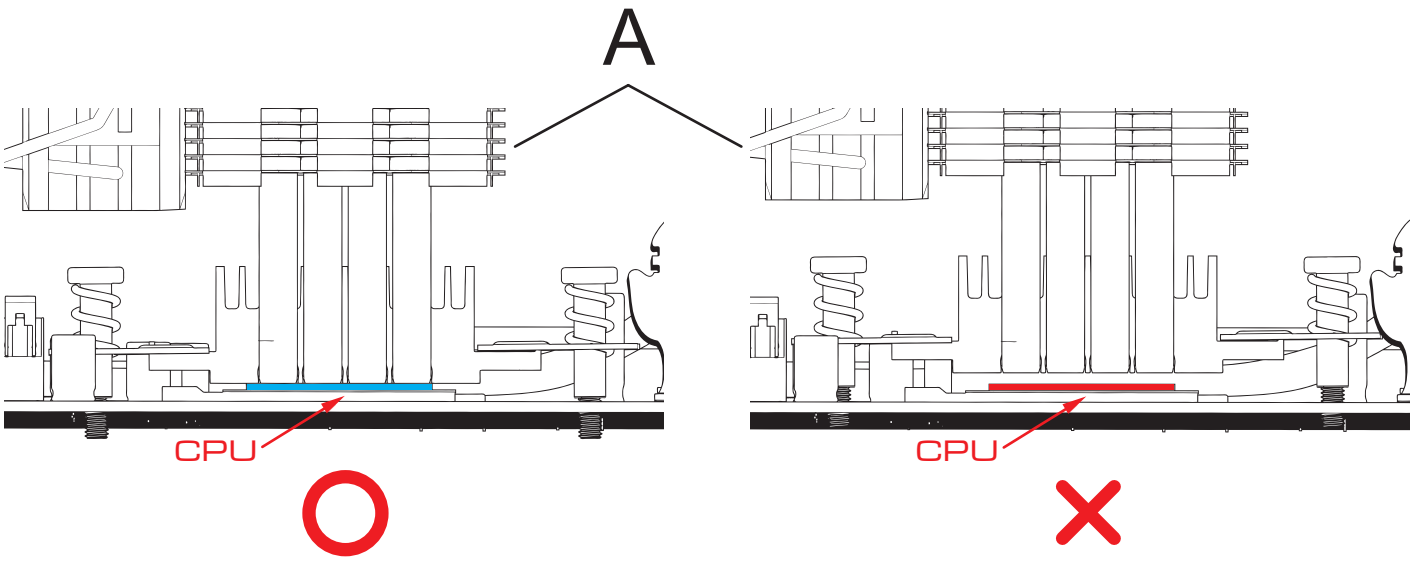

Make sure cooler firmly touch CPU

INTEL / AMD

8 If your motherboard has 5V 3-Pin addressable (digital) RGB header, you can customize RGB lighting via motherboard manufacture sync software

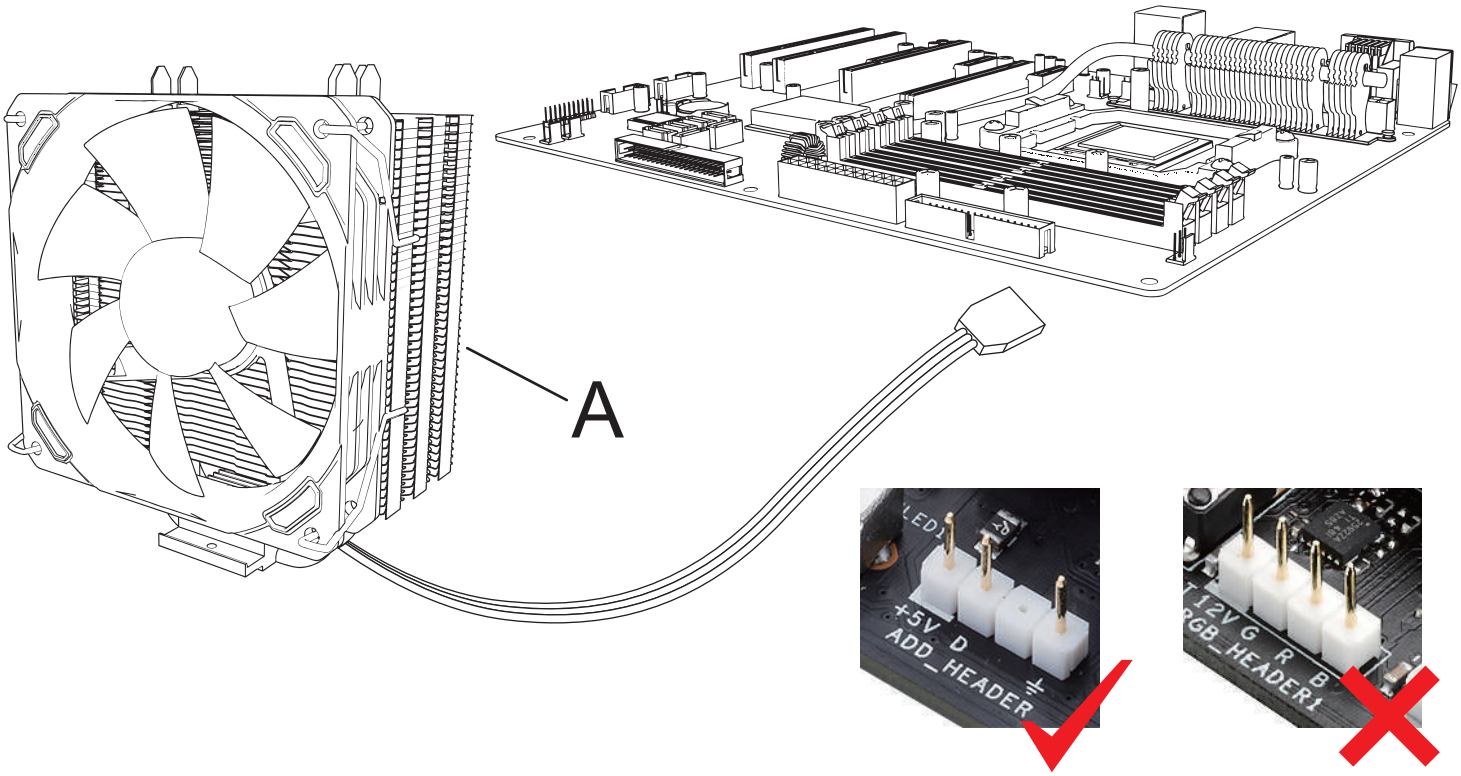

BOREAS E1-410 only support 5V addressable (digital) RGB header

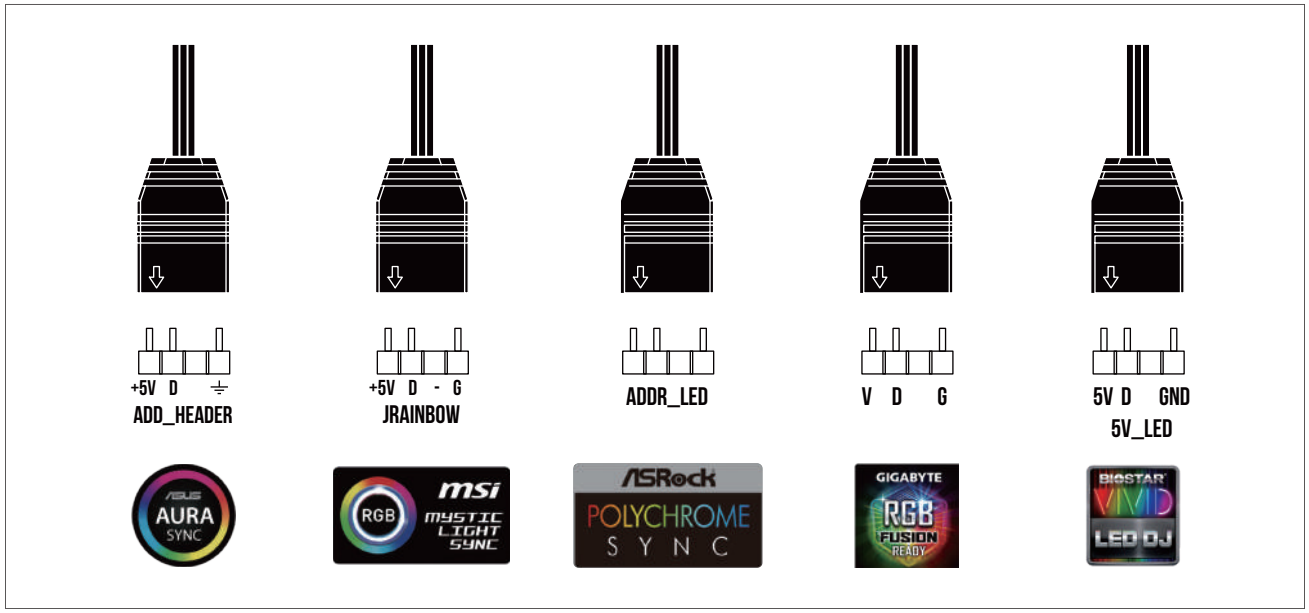

9 Turn on the computer after installing

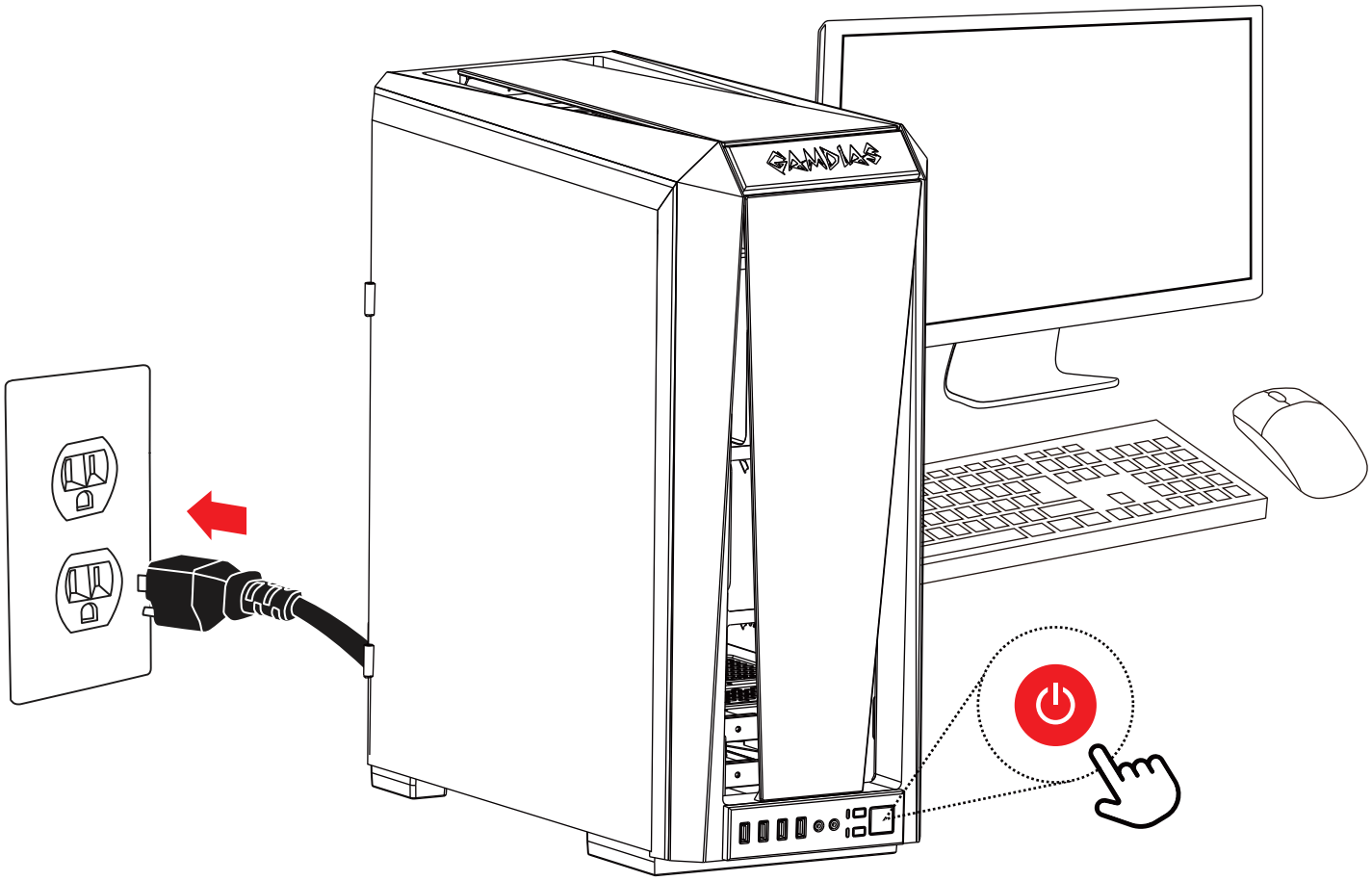



GAMDIAS

GAMING ART IN MOTION