钉装--,尺寸按文档（65×95mm）
封面封底 157g铜版纸 哑膜
内页80g书面纸

Divoom®

FAIRY-2

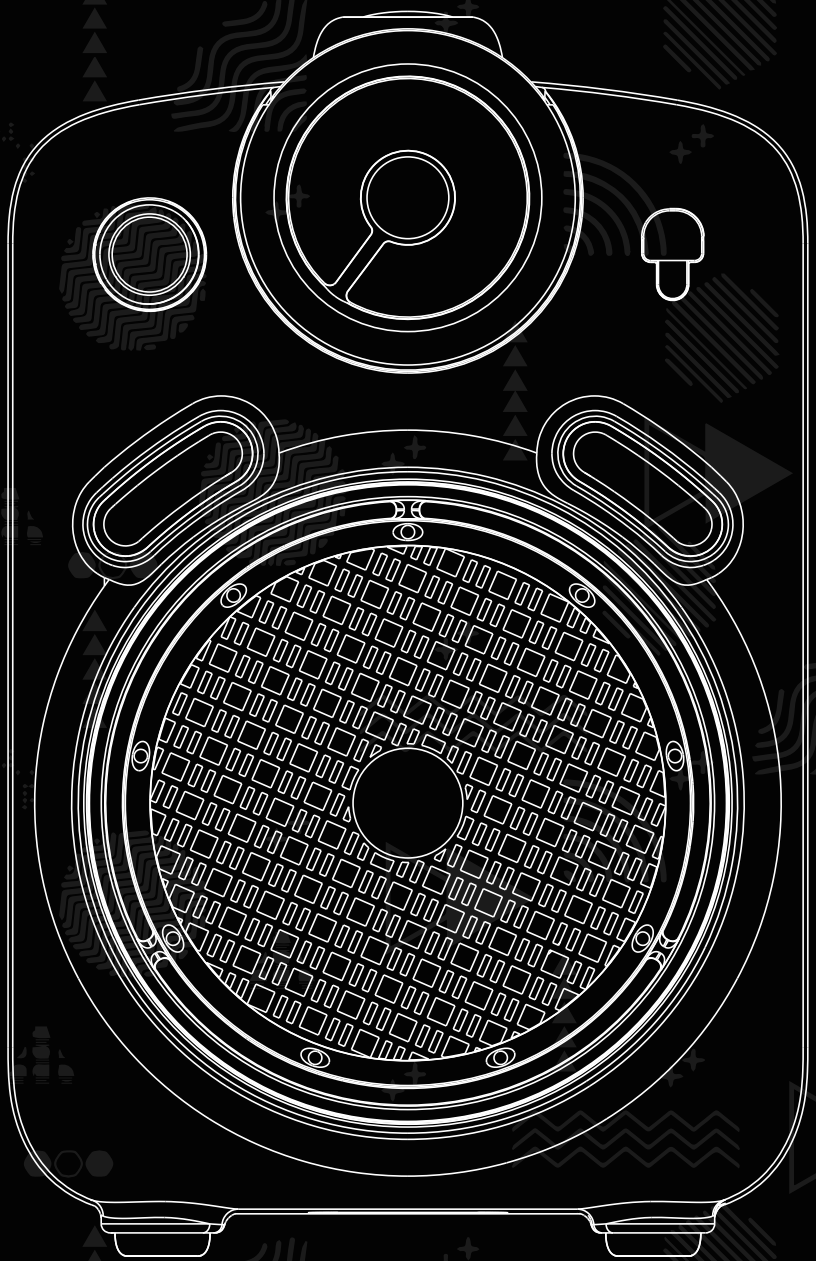



扫码关注公众号
回复【教程】
即可获得操作教程视频

小魔女2代K歌音箱是Divoom旗下新款小型便携蓝牙无线音箱。除了拥有动感音质和萌酷外观设计，还兼具蓝牙音箱、调频收音机、插卡MP3、卡拉OK四大功能。

配件清单:

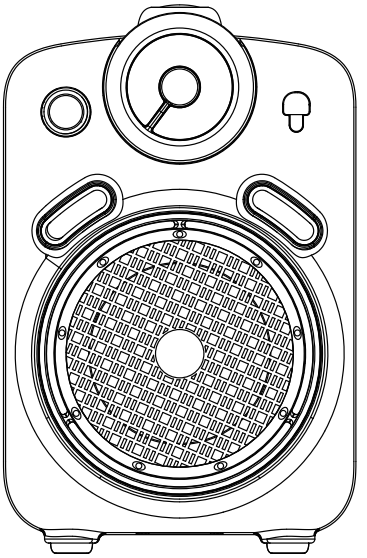

小魔女2代K歌音箱

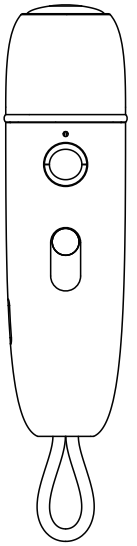

麦克风

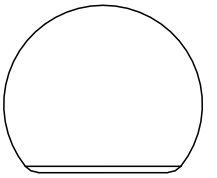

麦克风海绵套



Type-C充电线



使用指南

使用前请仔细阅读使用说明书，如需了解更多产品信息，请浏览官网www.Divoom.com。本公司产品在不断的精进中，如有规格或细节调整原则不另行说明，请与实物为准，敬请谅解。

产品示意图:

1. **TYPE-C充电孔**

2. **充电/电量指示灯**
   25%、50%、75%、100%
   电量指示

3. **FM天线**
   接收信号

4. **信号灯**
   信号灯亮起，
   表示麦克风连接成功

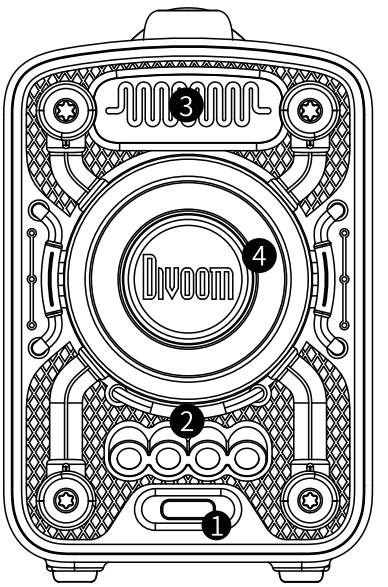

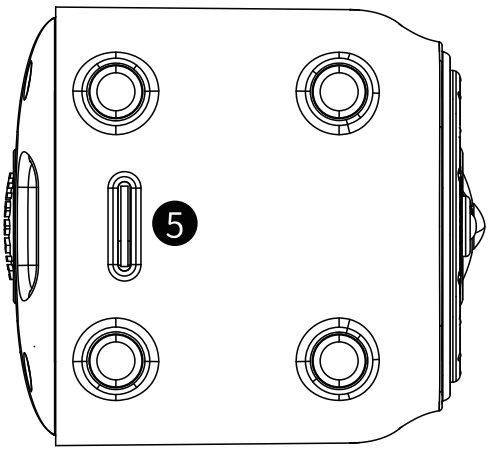

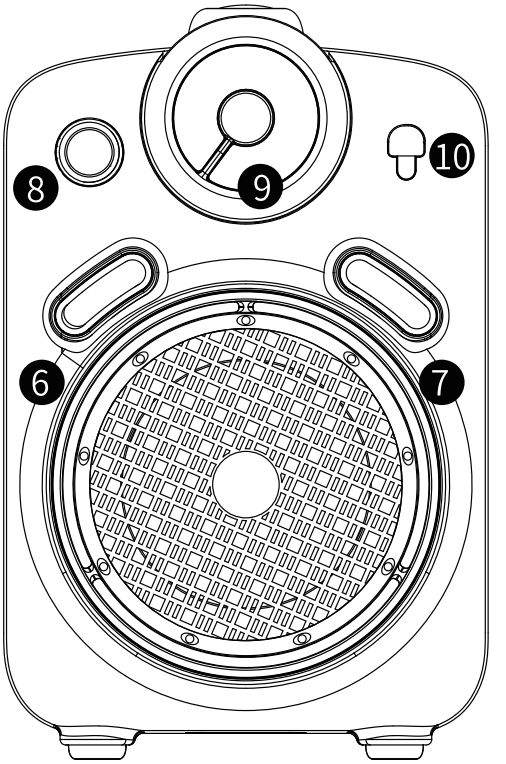

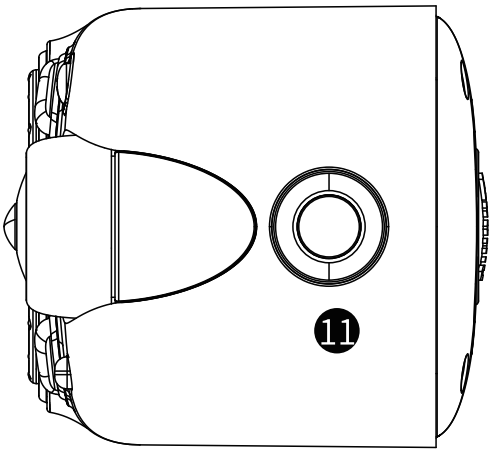

5 TF卡插口

支持MP3音频

6 左向键

短按：上一首
长按：切到上个文件夹（仅TF卡模式）

7 右向键

短按：下一首
长按：切到下个文件夹（仅TF卡模式）

8 模式键

短按：切换模式（蓝牙/TF卡/FM）
长按：蓝牙断开或回连 / 单曲循环（仅TF卡模式）
双击：直播模式(音箱用Type-C数据线连接手机/电脑，才有此模式）

9 收音旋钮

手动调台-仅限收音模式

10 指示灯

蓝色=蓝牙 白色=TF卡
绿色=FM收音

11 播放音量旋钮

短按：播放/暂停/FM静音
长按：开关机
旋钮：音量调节

蓝牙模式

1. 打开音箱后，请确认指示灯⑩闪烁蓝光。
2. 请在手机设置>蓝牙，连接“Divoom Fairy 2”。
3. 连接后，请开始播放音乐。

*如果开机后指示灯⑩显示指示灯蓝色而并未闪烁，该音箱可能已被另外一台手机连上，则先把该手机断开蓝牙连接(也可长按模式键❽断开)。

TF卡模式

1.打开音箱后，插入TF即自动转换TF卡音频模式(指示灯⑩位置显示白色)。
2.请旋转音量旋钮⓫调节音量，短按该旋钮可进行播放暂停，按左右向键❻，❼切换歌曲。

*如果指示灯⑩显示其他颜色，请按模式键❽切换至TF卡音频模式。

FM收音模式

1.打开音箱后，请按模式键❽切换至FM收音模式(搜索到电台后绿灯亮起)。
2.收音旋钮❾进行手动调台。
3.请旋转音量旋钮⓫调节音量。

*如果指示灯⑩显示其他颜色，请按模式键❽切换至FM模式(绿灯)如需静音收音机，请短按播放旋钮⓫。

如何开启卡拉OK功能?

麦克风和音箱均开启后，音箱自动检测麦克风信号，音箱背面信号灯亮起后表示连接成功，对着麦克风讲话或演唱即可。

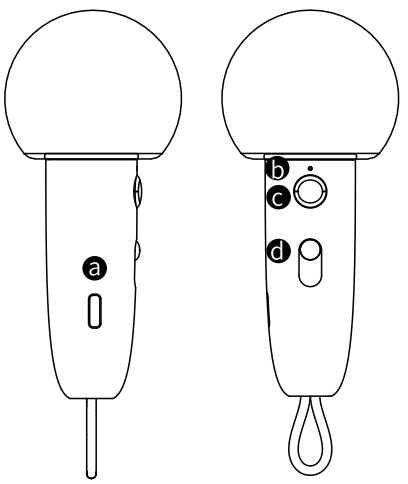

ⓐ TYPE-C充电孔

ⓑ 麦克风长按开机后，指示灯亮
若麦克风开机指示灯闪烁，则麦克风关机，再长按开机键一直等待指示灯长亮
连接成功后，则指示灯常亮

ⓒ 长按: 开关机
短按: 切换麦克风音效
双击：打开消原音/关闭消原音

ⓓ 上下滑动调整麦克风音量

*音箱先开机，麦克风长按开机键后指示灯常亮，麦克风音箱自动配对成功，即可开始K歌。若麦克风开机后指示灯闪烁，则长按关机，再长按开机键直至指示灯长亮。

如何充电?

1.插入机身背面Type-C充电线充电同时可听歌。因充电器开关频率会干扰FM收音效果，建议收听FM时拔下充电线。
2.充电时长取决于充电配件功率,建议使用5V⎓2A的充电装置。

直播模式

音箱通过数据线连接电脑或手机的情况下，双击模式键❽到直播模式。

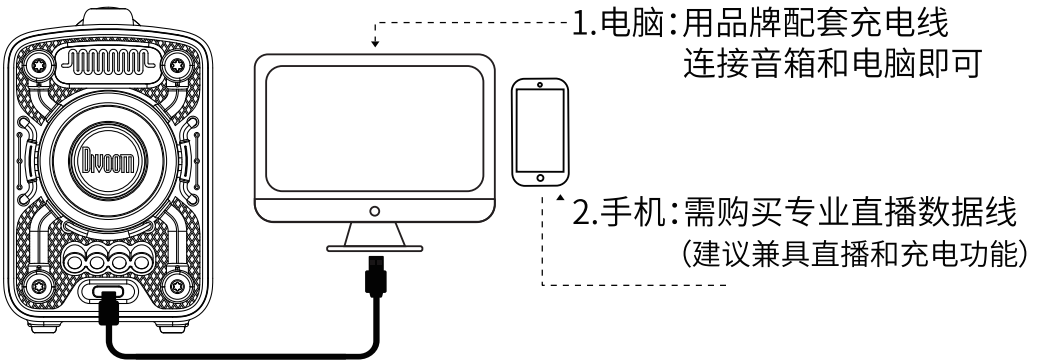

音箱参数

外形尺寸: 62.0×67.8×96.5mm
产品重量: 509g
喇叭尺寸: 45mm
输出功率: 12W
频率响应: 80-16KHz
信噪比: ≥79dB
内置电池：7.4Wh
充电时长: 3-4hrs
充电电压: 5V⎓2A
传输距离: ≤10m
蓝牙版本: 5.2
播放时间: 5hrs
（根据特定音频和音量条件下测试）

麦克风参数

外形尺寸: 24.7×25.5×86.5mm（不含海绵套）
产品重量: 31g
频率响应: 70-15KHz
灵敏度：-50(±3)dB
使用时间: 8hrs
内置电池：1.295Wh
充电时长: 3hrs
充电电压: 5V⎓1A
传输距离: ＜10m
无线连接：2.4G无线传输技术

安全指引及注意事项

使用前请务必仔细阅读此说明书,请按照说明书内容操作使用
1.请将产品放在平稳,安全的地方,避免掉落造成损伤或者造成人员受伤。
2.保持产品周边有足够的空间。
3.请勿将任何异物插入产品插孔。
4.请勿大力敲击产品或用外力撞击产品。
5.远离热源,不要靠近明火,微波炉,电暖气等会产生高热的电器,确保安全,只能使用随附的配件。
6.如有任何问题请与原厂或者代理商联络,咨询专业的维修人员处理解决。

符合性声明:

本设备符合2014年4月16日理事会欧洲议会的以下指令2014/53/EU的基本要求。

- 本产品符合2011年7月1日欧洲议会和理事会关于限制在电气和电子设备中使用某些危险物质的指令2011/65/EU。
- 请按照当地法规妥善处理废旧电池。请勿焚烧。本产品中的可充电锂离子电池的拆卸只能由合格的专业人员进行。
- 产品不带电源适配器销售,消费者若使用电源适配器供电,则应购买配套使用获得CCC认证并满足标准要求的电源适配器。

产品中有害物质的名称及含量

为满足中华人民共和国电子电器产品有害物质限制相关的法律法规和其它要求,公司对本产品中有害物质,声明如下:

部件名称	有害物质									
	铅 (Pb)	汞 (Hg)	六价铬 [Cr(VI)]	多溴联苯 (PBB)	多溴二苯醚 (PBDE)	邻苯二甲酸二正丁酯 (DBP)	邻苯二甲酸二异丁酯 (DIBP)	邻苯二甲酸丁基苄酯 (BBP)	邻苯二甲酸二(2-乙基)己酯 (DEHP)	镉 (Cd)
塑胶组件	○	○	○	○	○	○	○	○	○	○
金属组件	○	○	○	○	○	○	○	○	○	○
PCBA	○	○	○	○	○	○	○	○	○	○
硅胶件	○	○	○	○	○	○	○	○	○	○
电池	○	○	○	○	○	○	○	○	○	○
喇叭	○	○	○	○	○	○	○	○	○	○
线材	○	○	○	○	○	○	○	○	○	○
其它配件	○	○	○	○	○	○	○	○	○	○

本表格依据SJ/T 11364的规定编制。

O:表示该有害物质在该部件所有均质材料的含量均在GB/T 26572标准规定的限量要求下。
X:表示该有害物质至少在该部件的某一均质材料中的含量超出GB/T 26572标准规定的限量要求。
注:表中标记 “X” 的部件,皆因目前业界没有成熟的替代方案,符合欧盟RoHS指令环保要求。



在中华人民共和国境内销售的电子电气产品必须标识此标志,
标志内的数字代表在正常使用的状态下的产品的环保使用期限。

关于微功率设备的使用警示：

（一）不得擅自改变使用场景或使用条件、扩大发射频率范围、加大发射功率（包括额外加装射频功率放大器），不得擅自更改发射天线；
（二）不得对其他合法的无线电台（站）产生有害干扰，也不得提出免受有害干扰保护；
（三）应当承受辐射射频能量的工业、科学及医疗（ISM）应用设备的干扰或其他合法的无线电台（站）干扰；
（四）如对其他合法的无线电台（站）产生有害干扰时，应立即停止使用，并采取措施消除干扰后方可继续使用；
（五）在航空器内和依据法律法规、国家有关规定、标准划设的射电天文台、气象雷达站、卫星地球站（含测控、测距、接收、导航站）等军民用无线电台（站）、机场等的电磁环境保护区域内使用微功率设备，应当遵守电磁环境保护及相关行业主管部门的规定；
（六）禁止在以机场跑道中心点为圆心、半径5000米的区域内使用各类模型遥控器；
（七）微功率设备需要在温度0-40°C，电压5V⎓1A条件下工作。

保修信息

本产品享有Divoom的有限保修。有关完整的保修详情，请访问官方网站www.Divoom.com

本产品的保修不适用

1.设备,部件已超出保修期。
2.用户未按照说明书指南要求,错误操作及保管不当使设备故障或损坏。
3.因意外因素或者人为因素(包括如操作失误,刮伤,跌落等导致的设备故障或损坏)
4.因自然灾害等不可抗力(如地震,火灾)原因造成产品的故障或损害。
5.非本公司授权修理者拆过的。

保修条款:

本产品有效保修期为自出售之日起一年内，在保修期限内正常使用和维护下,无人为损坏,机器本身机件材料及功能出现问题,发生故障,无法正常使用,本公司将提供免费修理及更换零件。在使用过程中若发现问题请及时与官方旗舰店联系以便及时售后处理。

产品质保回执单

商品名称: _____

序 列 号: _____

购买渠道: _____

购买日期: _____

用户姓名: _____

联系电话: _____

用户地址: _____

官方联系方式

网上售后服务及售后咨询: 0755-86290791
JD: https://mall.jd.com/index-130830.html
TMALL: https://divoom.tmall.com
官方网站: www.Divoom.com

官方联系地址

制造商:深圳市战音科技有限公司
制造商地址:广东省深圳市宝安区沙井街道和一西部新联河工业园5栋厂房第一层东边

Welcome

Thank you for purchasing this Divoom product. Fairy-2 is an elegantly crafted portable Bluetooth speaker, and it has the following functions: Bluetooth audio, FM radio, TF card MP3 audio, and karaoke.

Package Contents:

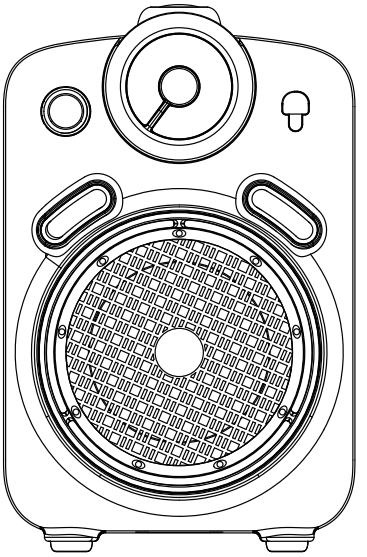

Fairy-2

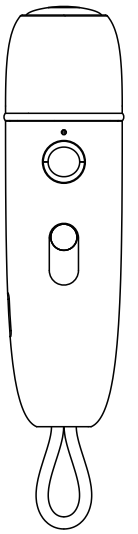

Fairy-2-Mic

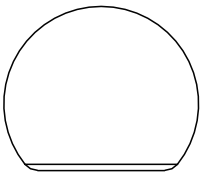

Microphone sponge cover



Type-C cable



User manual

Please follow the instruction on this manual. If you have any questions, please visit www.divoom.com and/or contact Divoom customer representative.
Disclaimer: Due to the nature of this product, the information on this manual is subject to change without any prior notice.

PARTS:

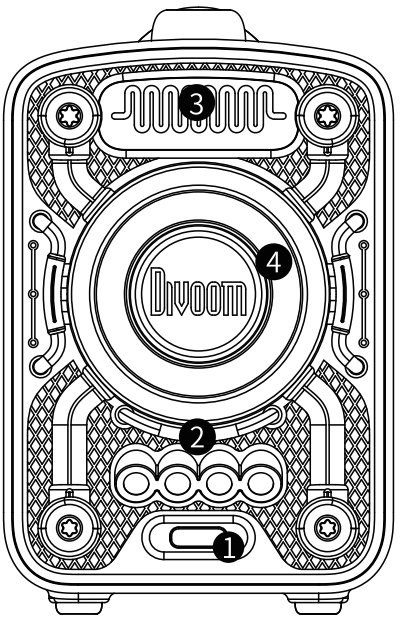

1. **TYPE-C charging port**

2. **Battery level indicator**
   25%、50%、75%、100% battery levels.

3. **FM antenna**

4. **Indicator**
   Microphone is connected when the indicator show orange light.

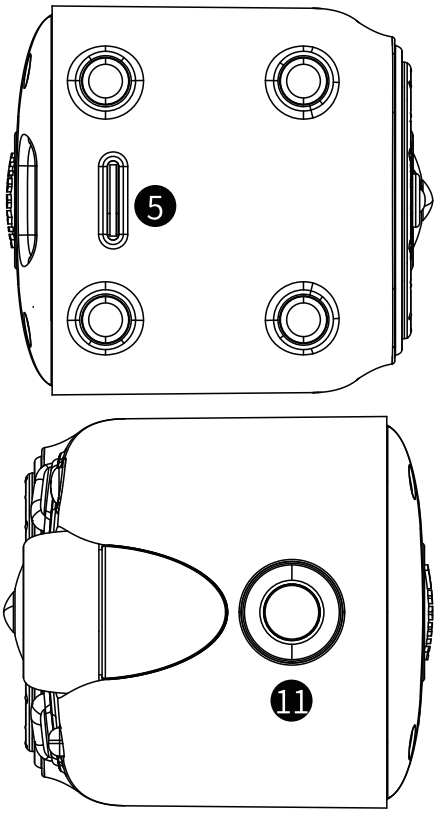

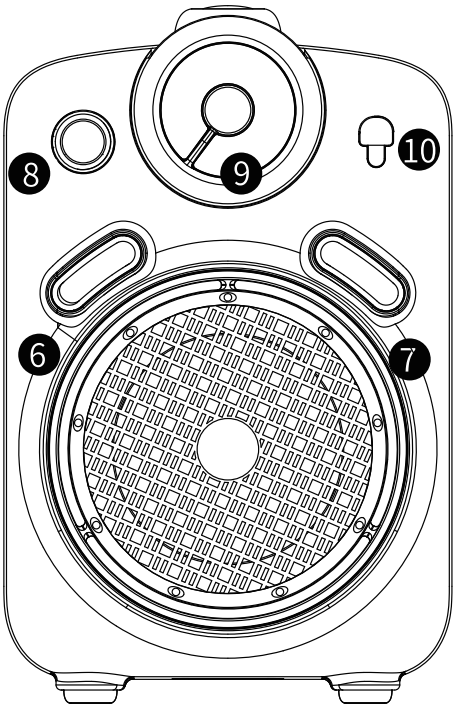

5 TF card port

MP3 files only, capacity support up to 128GB

6 Left button

Press：Previous track　　Hold: Switch to previous folder (TF card mode only)

7 Right button

Press：Next track　　Hold: Switch to next folder (TF card mode only)

8 Mode button

Press: switch modes (Bluetooth/TF/FM)
Hold: Activate&Deactivate Bluetooth/Single loop (only in TF mode)
Double press: Livestream mode (only when connected to phone/PC via cable)

9 Radio knob

Adjust radio channels-FM radio mode only

10 Indicator

Blue=Bluetooth　White=TF card　Green=FM radio

11 Play/Volume knob

Press: Play/Pause/Mute FM radio
Hold: On/Off
Switch: Adjust volume

Bluetooth mode:

1. Power ON speaker, and make sure indicator❿ is flashing Blue
2. Go to phone Settings>Bluetooth, please pair “Divoom Fairy2”
3. Once connected, you can play audio

*If the indicator light ❿ shows blue but does not flash after powering on, the speaker may have been connected to another mobile phone. In this case, disconnect the Bluetooth connection of the mobile phone first (you can also long press the mode button ❽ to disconnect).

TF card mode

1. Power ON speaker, and insert the TF card (indicator❿ shows white)
2. Turn the volume knob⓫ to adjust volume, Press the same knob to play and pause music, Press left button❻ or right button❼ to change song

*If the indicator❿ is showing a different color, please press the mode button❽ to change to the TF card mode

FM radio mode

1.Power ON speaker, and press mode button❽ to change to the FM radio mode
2.Turn the radio knob❾ to change station (Once it pick up a station, the indicator will show green)
3.Turn the volume knob to adjust volume

* If the indicator❿ is showing a different color, please press the mode button❽ to change to the FM mode(green indicator)
*You can mute the radio by press the play knob ⓫

How to enable the karaoke function

After the microphone and speaker are turned on, the speaker automatically detects the microphone signal. When the signal light on the back of the speaker lights up, it means the connection is successful. You can speak or sing into the microphone.

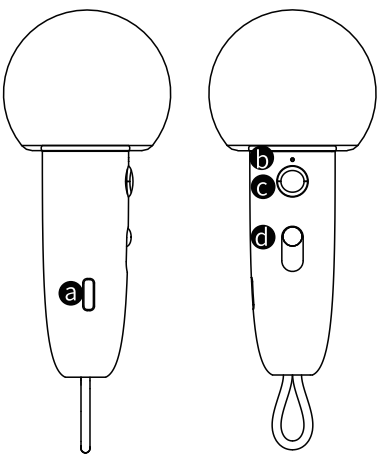

ⓐ **USB-C charging port**

ⓑ **Mic indicator on:** Power on
Mic indicator flash: If the microphone power on indicator light flashes, the microphone will be turned off, and thenPress and hold the power button until the indicator light stays on.gain until the indicator light stays on.
Mic indicator stay on: Connected

ⓒ **Hold:** On/Off
Short press: Switch voice mode
Double press: BGM only/ Original

ⓓ **Slide up/down:** Adjust the mic volume

*Turn on the speaker, turn on the microphone and wait for the mic indicator becomes solid, it means the pairing is successful. If the mic indicator keeps flashing, please turn off the mic and on again until its indicator becomes solid.

How to charge?

1.Insert the USB-C cable to charging port (rear panel). You can listen to music while charging, but it may affect the FM radio signal.
2.Charging time may vary by the USB charger. We suggests to use a 5V⎓2A USB charger.

OTG Live

Connect the speaker to phone or PC via cable, double press ❽ to enter OTG Live mode

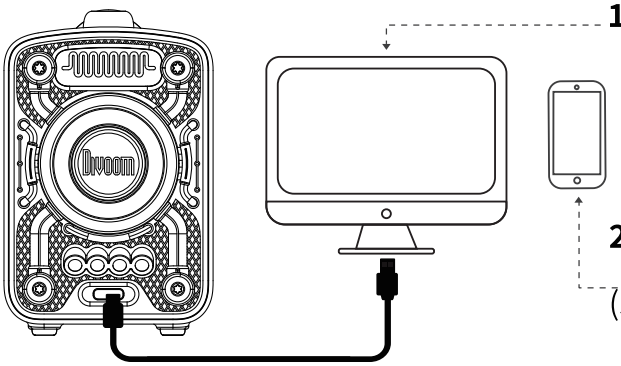

1.PC/Laptop：Use Divoom cable

2.Phone：Use professional Livestream cable (support charging function)

Fairy-2 specification

Dimension: 62×67.8×96.5mm
Weight: 509g
Speaker size: 45mm
Output: 12W
Frequency response: 80-16KHz
Signal-to-noise ratio: ⩾79dB
Playtime: 5hrs
(test conducted under moderate volume & song)

Battery capacity: 7.4Wh
Charging time: 3-4hrs
Charging voltage: 5V⎓2A
Wireless range: ⩽10m
Bluetooth: 5.2

Fairy-2-Mic specification

Dimension: 24.7×25.5×86.5mm
(Microphone sponge excluded)
Weight: 31g
Signal to noise ratio: 70-15KHz
Sensitivity：-50(z±3)dB
Playtime：8hrs
(test conducted under moderate volume & song)

Battery capacity: 1.295Wh
Charging time: 3hrs
Charging volage: 5V⎓1A
Connection range：＜10m
Transmitter transmitting power: ＜ 10mW
Connection type: 2.4G wireless transmission technology

Please read the following instructions carefully:

- Please follow our product installation and operation instructions.
- Always place the product on a smooth and stable surface.
- Do not push any objects into product vents or slots. Do not apply any great force on the product.
- Please keep the product at a room temperature environment. Do not please the product near any heat sources (such as radiators, heat registers, stoves, fire place, or direct sunlight). Do not place the product near any open flame source.
- Do not attempt to service the product by yourself. Always refer to the instructions by qualified service personnel.
- To avoid the risk of electrical hazard, do not expose this product to wet surface.

Declaration of conformity:

CE This device meets the essential requirements of the following Directive 2014/53/EU of the European parliament of the council of 16 April 2014.

· This product is in compliance with Directive 2011/65/EU of the European P arliament and of the Council of 1 July 2011 on the restriction of the use of certain hazardous substances in electrical and electronic equipment.
· The waste container symbo with the X through it on the device indicates that the device must be disposed of separately from normal domestic waste at an appropriate waste disposal facility at the end of its useful service life.

This product complies with the radio interference requirements of the European Community.
Product name: Bluetooth Speaker
Product model: Fairy-2
Manufacturer: Shenzhen Divoom Technology Co.,Ltd.
Address:Unit 1203-06,Building 6B,Convention Bay Zhonggang Plaza,No. 83, Zhanjing Road, Zhancheng Community,Fuhai Street,Bao An District, Shenzhen,
Guangdong, China
Frequency Range: 2402MHz to 2480MHz
Max. output Power: 5.13dBm
SIMPLIFIED EU DECLARATION OF CONFORMITY
The simplified EU declaration of conformity referred to in Article 10(9) shall be provided as follows:
Hereby, Shenzhen Divoom Technology Co.,Ltd. declares that radio equipment type Fairy-2 is in compliance with Directive 2014/53/EU, and this p
roduct is allowed to be used in all EU member states.
The full text of the EU declaration of conformity is available at following
This product can be used across EU member states.
BATTERY Warning：CAUTION:RISK OF EXPLOSION IF BATTERY IS REPLACED BY AN INCORRECT TYPE DISPOSE OF USED BATTERIES ACCORDING TO THE INSTRUCTIONS

The full text of the EU declaration of conformity is available at following
This product can be used across EU member states.
BATTERY Warning:CAUTlON:RlSK OF EXPLOSION IF BATTERY IS REPLACED BY AN INCORRECT TYPE DISPOSE OF USED BATTERIES ACCORDING TO THE INSTRUCTIONS.

EU agent information

Company name：AOCE INFORMATION TECHNOLOGY
Add:61 rue de Lyon 75012 Paris
Contact(Name,emial,tel):Johnson.wang , aoce-service@outlook.com,
Tel:+49-163 1014 128

UK agent information

Company name：AOCE LIMITED
Add:Office Suite 29a 3/F 23 Wharf Street, London, England, SE
Contact(Name,emial,tel):Johnson.wang , aoce-service@outlook.com,
Tel:+44-759 7659 775

Warranty information:

This product is covered by a limited warranty from Divoom. For complete warranty details, visit the website www.Divoom.com

Limited Warranty

1. If within 12 months of purchase this device or any part thereof is proven to be defective by reason of faulty workmanship or defects in materials,we will at our option repair or replace the same free of charge of labor or materials on condition that.
2. The original invoice or sales receipt with the date of purchase, or stamp from the dealer is presented together with the defective unit.
3. The warranty does not cover product failures which have been caused by use of accessories other peripheral devices which are not DIVOOM branded original accessories intended for use with the product.
4. The warranty does not cover product failures caused by:Modification, repaired, and disassembled by any person who is not authorized by the manufacturer.Any defective
unit or part shall become property of the manufacturer. The warranty does not cover any damage caused by misuse, drop, hit or neglect.

FCC STATEMENT :

Any Changes or modifications not expressly approved by the party responsible for compliance could void the user's authority to operate the equipment.
This device complies with Part 15 of the FCC Rules. Operation is subject to the following two conditions:
(1) this device may not cause harmful interference
(2) this device must accept any interference received, including interference that

may cause undesired operation.changes or modifications not expressly approved by the party responsible for compliance could void the user's authority to operate the equipment.

NOTE: This equipment has been tested and found to comply with the limits for a Class B digital device, pursuant to Part 15 of the FCC Rules. These limits are designed to provide reasonable protection against harmful interference in a residential installation. This equipment generates, uses and can radiate radio frequency energy and, if not installed and used in accordance with the instructions, may cause harmful interference to radio communications. However, there is no guarantee that interference will not occur in a particular installation.If this equipment does cause harmful interference to radio or television reception, which can be determined by turning the equipment off and on, the user is encouraged to try to correct the interference by one or more of the following measures:
– Reorient or relocate the receiving antenna.
– Increase the separation between the equipment and receiver.
– Connect the equipment into an outlet on a circuit different from that to which the receiver is connected.
Consult the dealer or an experienced radio/TV technician for help

RF warning statement:
The device has been evaluated to meet general RF exposure requirement. The device canbe used in portable exposure condition without restriction.

PRODUCT WARRANTY CARD

Product name: _____

Serial number: _____

Purchasing store: _____

Purchasing date: _____

Owner name: _____

Contact Email: _____

Owner address: _____

Contact Us

Divoom official website: http://www.divoom.com/
Divoom warranty Information: https://divoom.com/policies/refund-policy
Divoom product FAQ: https://divoom.com/apps/help-center
Divoom support Email: support@divoom.com
Divoom support contact number: 0755-86290791

Our Address

Shenzhen Divoom Technology Limited Corporation 1st Floor,
5th Building, XinLianHe Industrial
Complex Shajing Town, Baoan District Shenzhen City, Guangdong Province
518000 The people’ s republic of China

www.divoom.com