xiaomi Outdoor Camera CW500 Dual User Manual

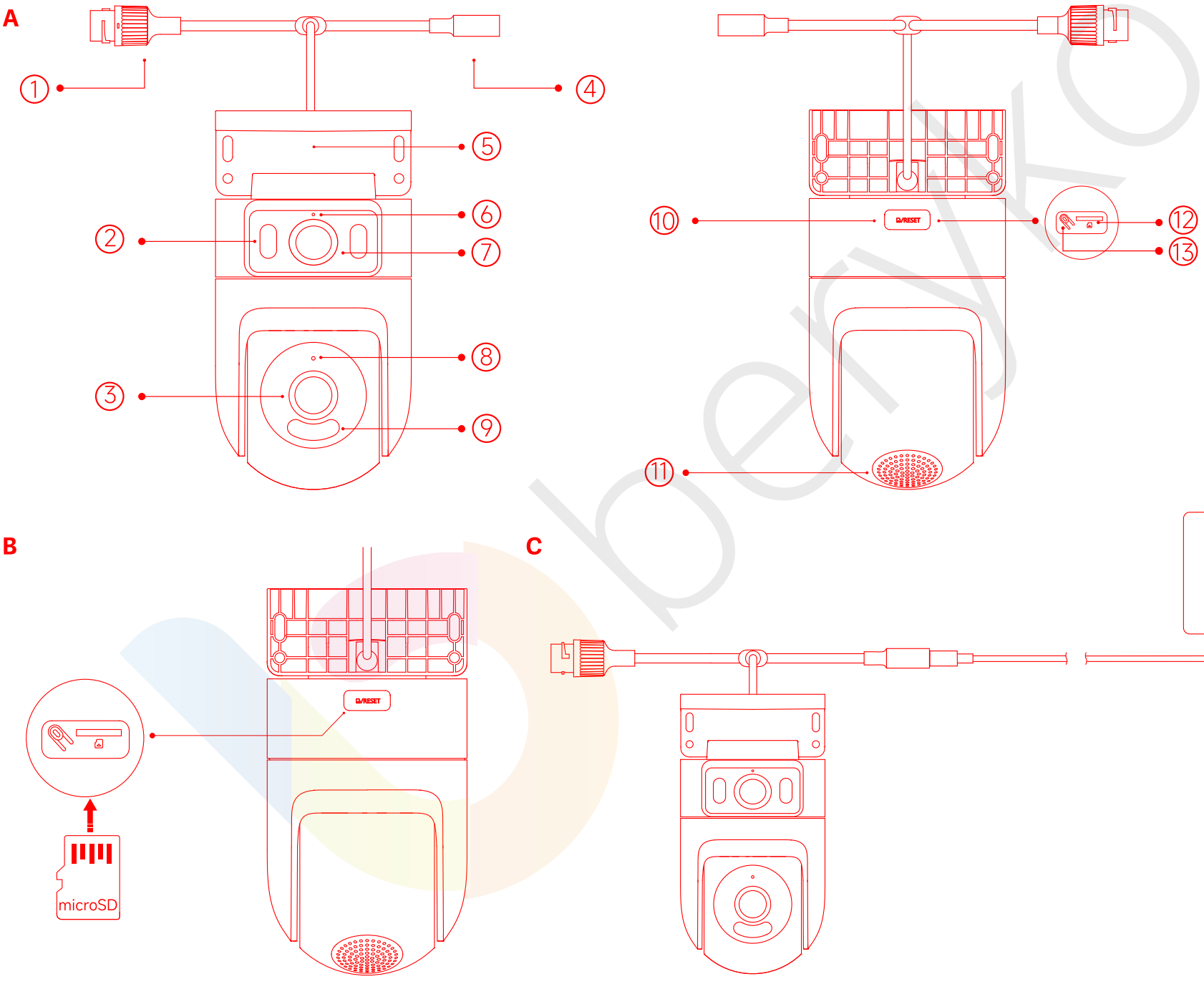
A
1
2
3
4
5
6
7
8
9
10
11
12
13
RESET
B
RESET
microSD
C

D-1

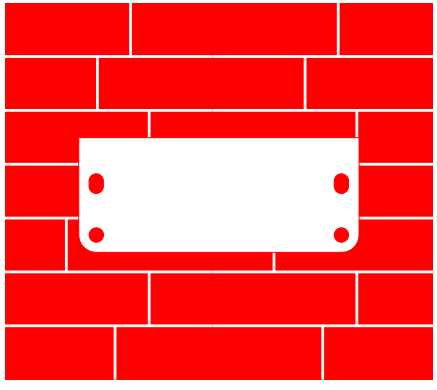

D-2

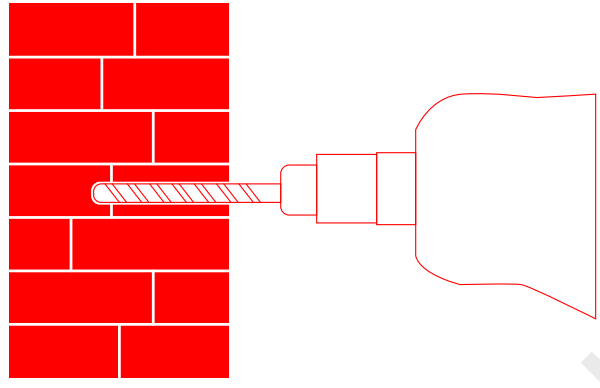

D-3

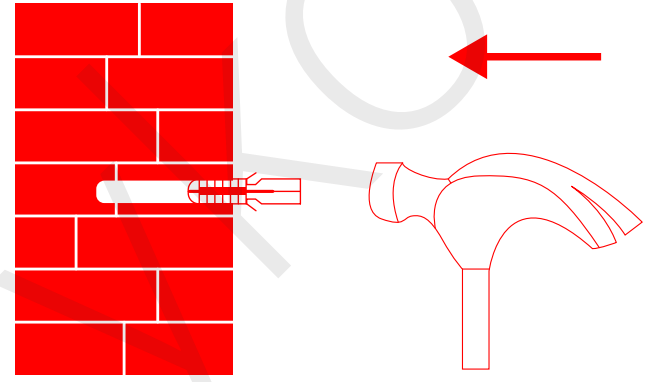

E-1

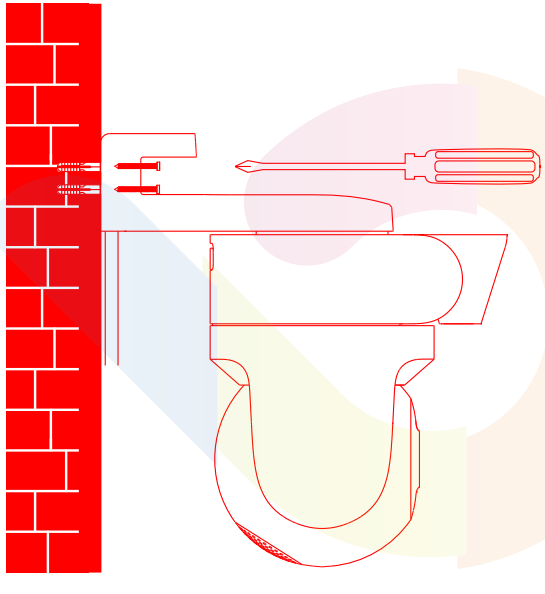

E-2

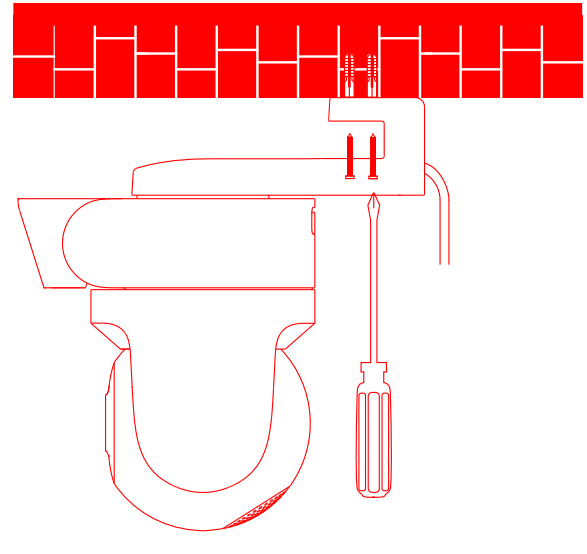

F-1

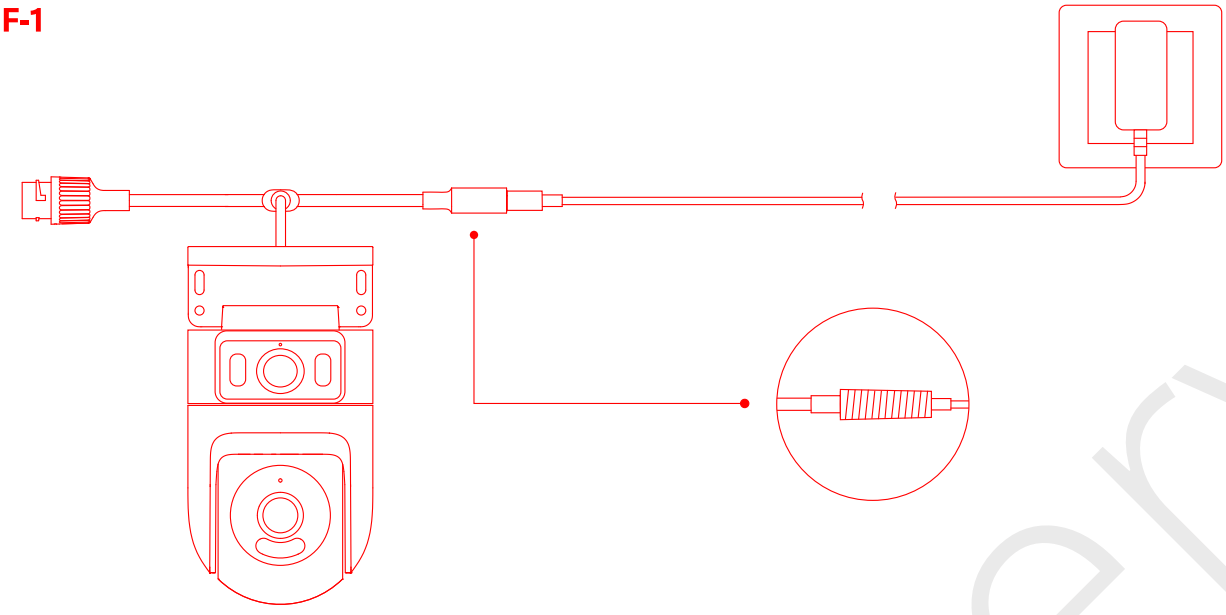

F-2

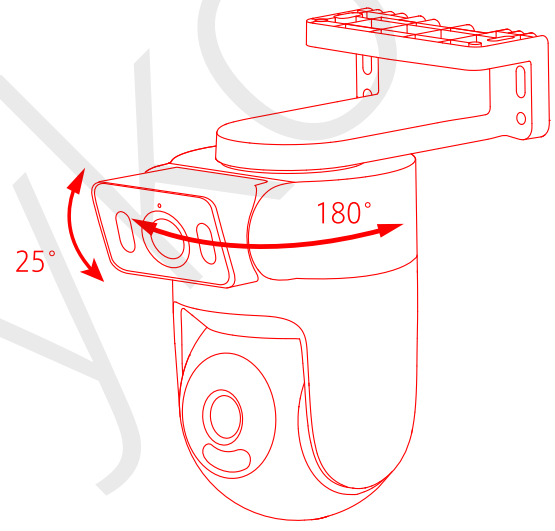

G-1

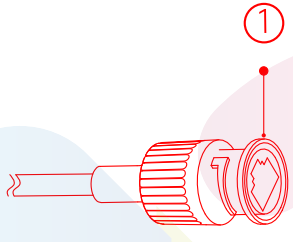

G-2

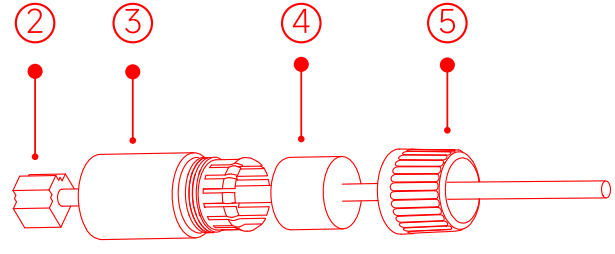

G-3

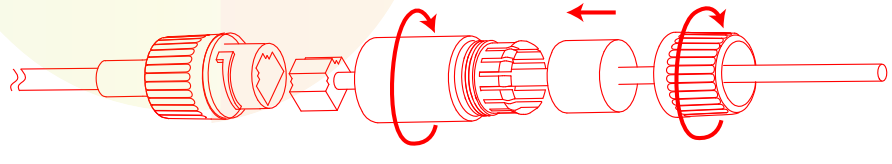

Read this manual carefully before use, and retain it for future reference.

Product Overview

Fig. A

① Network Cable Port
② Fill Light
③ Dome Camera Lens
④ Power Port
⑤ Wall Mount
⑥ Indicator
⑦ Bullet Camera Lens
⑧ Microphone
⑨ Fill Light
⑩ Waterproof Cover
⑪ Speaker
⑫ MicroSD Card Slot
⑬ Reset Button

Package Contents: Xiaomi Outdoor Camera CW500 Dual, power adapter, waterproof tape for power cable, wall/ceiling mounting template sticker, screw accessory kit, waterproof network port accessories, user manual

Note: Illustrations of product, accessories, and user interface in the user manual are for reference purposes only. Actual product and functions may vary due to product enhancements.

How to Use

● Installing a microSD card

Make sure that the camera is unplugged. Open the waterproof cover above the microSD card slot and insert a microSD card with its contact points facing down.

CAUTION: Unplug the camera when inserting or removing the microSD card. Please use a microSD card from a qualified brand (the camera supports a microSD card of 16 GB to 256 GB. The microSD card may need to be formatted via Settings > Manage storage on the camera's plug-in page in the Xiaomi Home app). It is recommended that the microSD card has a read/write speed of no less than U1/Class 10. **(Fig.B)**

Note: After installing or removing the microSD card, make sure to place the waterproof cover back on the card slot properly to prevent water from entering the camera and affecting normal use.

Turning on

- Insert the power adapter cable into the power port to automatically turn on the camera.(Fig. C)
- The camera is successfully turned on when the indicator light is yellow and a voice prompt is heard.

Notes: Please make sure to use the original charging cable of the power adapter provided to connect the camera to avoid the camera not working properly. When the camera is turned on, don't turn the dome camera lens manually to force it to rotate. If the positioning of the lens is inaccurate, please calibrate it in the Xiaomi Home app.

- Indicator status description

Yellow: Awaiting connection...
Blinking yellow: Connecting to a network...
Blinking blue: Connecting to a server...
Keeping blue: Connected successfully

Connecting with the Xiaomi Home App

This product works with the Xiaomi Home app. Use the Xiaomi Home app to control your device, and to interact with other smart home devices.
Scan the QR code to download and install the app. You will be directed to the connection setup page if the app is installed already. Or search for "Xiaomi Home" in the app store to download and install it.
Open the Xiaomi Home app, tap "+" on the upper right, and then follow the instructions to add your device.
Please download and use Xiaomi Home app version 9.6 and above.

4832AAF7

Note: The version of the app might have been updated, please follow the instructions based on the current app version. Make sure that the camera turns on and the network connection is stable during connecting. The indicator keeps yellow when the camera is turned on, and then changes to blue after the successful connection between the camera and the app.

Resetting

When switching the network or the Xiaomi Account to which the camera is connected, please delete the camera from the Xiaomi Home app and then bind it again.

Note: Resetting the camera will not delete any data on the microSD card.

Precautions

- The operating temperature for the camera ranges from -30°C to 60°C. Do not use the camera in environments with temperatures above or below the specified range.
- The camera is a precision electronic product that has an IP66 dust-tight and water-resistant rating. To ensure normal use, do not use the camera in extremely humid environments or locations that may cause water ingress.
- The power adapter that comes along with the camera is not waterproof and is only for indoor use. Do not use the power adapter in extremely humid environments or locations that may cause water ingress. The operating temperature for the power adapter ranges from -30°C to 45°C. Do not use in environments with temperatures above or below the specified range.
- To improve the camera's performance, do not place it where its lens faces or is next to a reflective surface, such as glass and white walls, as this will cause the image to appear overly bright in areas close to the camera and darker in areas further away, or may cause the camera to produce white images.
- When using Wi-Fi, please make sure that the camera is installed in an area with a strong Wi-Fi signal. Do not install the camera near microwave ovens or other objects or places that may affect its Wi-Fi signal.
- When the night vision feature is enabled, the change of ambient light will trigger the filter to change, probably accompanied by a slight click sound, which is normal.
- If the power cable is damaged or broken, it must be replaced by professionals from the manufacturer, after-sales service department, or departments of similar functions to avoid safety hazards.

How to Install

Mounting the camera on a wall

1. Paste the mounting template sticker where the camera needs to be installed, and drill four holes in the wall with a drilling tool according to the locating holes on the sticker. The hole is approx. 6 mm in diameter and approx. 40 mm in depth.(Fig. D-1,Fig.D-2)
2. Insert four plastic wall plugs into the holes in the wall.(Fig. D-3)
3. Place the mount against the wall, insert screws into the holes, and drill them into the plastic wall plugs on the wall.
   Wall mount installation(Fig. E-1) Ceiling mount installation(Fig. E-2)
4. Wrap the power cable port with the waterproof tape after the camera is fixed to ensure waterproof performance.(Fig. F-1)

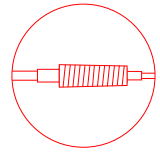
Wrapping with the waterproof tape

5. Once the camera is fixed and turned on, the shooting angle of the bullet camera lens can be adjusted manually. The mount can be adjusted horizontally by 180° and the bullet camera lens can be adjusted up and down by 25°.(Fig. F-2)

Installing the waterproof accessories

The waterproof network port accessories to be installed include: sealing ring, waterproof sleeve, stopper, waterproof rear cover. Once installed, the waterproof performance of the network cable port will be improved.
Place the sealing ring on the camera's network cable port (Fig. G-1). Thread the waterproof rear cover, stopper and waterproof sleeve over the network cable in order (Fig. G-2), then plug the network cable into the port. Screw together the waterproof sleeve and stopper, then screw together the waterproof rear cover and waterproof sleeve (Fig. G-3).

Fig. G-1, Fig.G-2

① Sealing Ring ② Network Cable ③ Waterproof Sleeve ④ Stopper ⑤ Waterproof Rear Cover

CAUTIONS:

- The wall must be able to support at least three times the total weight of the camera.
- The camera must be firmly fixed to the wall according to the installation instructions in the user manual to prevent accidental injury.
- Do not install near an air conditioner outdoor unit, range hood outlet, gas water heater outlet, or other heat sources.

Specifications

Name: Smart Camera
Model: MJSXJ08HL
Rated Input: 12V ⎓ 1A
Wi-Fi Maximum Output Power: 2412–2472 MHz, <20 dBm
5180–5240MHz, <23 dBm
5260–5320MHz, <20 dBm
5500–5700MHz, <20 dBm
5745–5825MHz, <13.98 dBm
Bluetooth Maximum Output Power: 2402–2480MHz, <10 dBm
Aperture: f/1.6
Wireless Connectivity:
Wi-Fi IEEE 802.11 a/b/g/n/ac/ax 2.4 GHz/5 GHz,
Bluetooth 5.0
Storage:
MicroSD card (supported capacity is 16 GB–256 GB)
Operating Temperature: -30°C to 60°C
Resolution: 2560 × 1440
Item Dimensions: 189.6 × 177.9 × 98.0 mm
Video Codec: H.265
Compatible with: Android™ 8.0 & iOS 12.0 or above

Frequency bands of 5 GHz Band 3 (5650MHz-5725MHz) are unavailable for the camera in Malaysia.

Note: Product specifications and safety information are shown in the user manual and on the product's bottom

External Power Supply: Charge the device with the EU adapter (AD-0121200100EU-6) supplied by Shenzhen AMC Technology Co., Ltd.

WARRANTY NOTICE

As a Xiaomi consumer, you benefit under certain conditions from additional warranties. Xiaomi offers specific consumer warranty benefits which are in addition to, and not instead of, any legal warranties provided by your national consumer law. The duration and conditions related to the legal warranties are provided by respective local laws. For more information about the consumer warranty benefits, please refer to Xiaomi's official website https://www.mi.com/global/support/warranty. Except as prohibited by laws or otherwise promised by Xiaomi, the after-sales services shall be limited to the country or region of the original purchase. Under the consumer warranty, to the fullest extent permitted by law, Xiaomi will, at its discretion, repair, replace or refund your product. Normal wear and tear, force majeure, abuse or damage caused by the user's negligence or fault are not warranted. The contact person for the after-sale service may be any person in Xiaomi's authorized service network, Xiaomi's authorized distributors or the final vendor who sold the products to you. If in doubt please contact the relevant person as Xiaomi may identify.
The present warranties do not apply in Hong Kong and Taiwan.
Products which were not duly imported and/or were not duly manufactured by Xiaomi and/or were not duly acquired from Xiaomi or a Xiaomi's official seller are not covered by the present warranties. As per applicable law you may benefit from warranties from the non-official retailer who sold the product. Therefore, Xiaomi invites you to contact the retailer from whom you purchased the product.

Regulatory Compliance Information

WEEE Information



All products bearing this symbol are waste electrical and electronic equipment (WEEE as in directive 2012/19/EU) which should not be mixed with unsorted household waste. Instead, you should protect human health and the environment by handing over your waste equipment to a designated collection point for the recycling of waste electrical and electronic equipment, appointed by the government or local authorities. Correct disposal and recycling will help prevent potential negative consequences to the environment and human health. Please contact the installer or local authorities for more information about the location as well as terms and conditions of such collection points.

EU Declaration of Conformity

CE

Hereby, Xiaomi Communications Co., Ltd. declares that the radio equipment type MJSXJ08HL is in compliance with Directive 2014/53/EU. The full text of the EU declaration of conformity is available at the following internet address:
http://www.mi.com/global/service/support/declaration.html

Under normal use of condition, this equipment should be kept a separation distance of at least 20 cm between the antenna and the body of the user.

It is recommended to use LPS power supply, or the PS Level of power output part is less than PS2.

Restrictions in the 5 GHz band:

According to Article 10 (10) of Directive 2014/53/EU, the packaging shows that this radio equipment will be subject to some restrictions when placed on the market in Belgium (BE), Bulgaria (BG), the Czech Republic (CZ), Denmark (DK), Germany (DE), Estonia (EE), Ireland (IE), Greece (EL), Spain(ES), France (FR), Croatia (HR), Italy (IT), Cyprus (CY), Latvia (LV), Lithuania(LT), Luxembourg (LU), Hungary (HU), Malta (MT),Netherlands (NL), Austria(AT), Poland (PL), Portugal (PT), Romania (RO), Slovenia (SI), Slovakia (SK), Finland(FI), Sweden (SE), Türkiye (TR), Norway(NO), Switzerland (CH), Iceland (IS), Liechtenstein (LI), and Northern Ireland (NI).

The WLAN function for this device is restricted to indoor use only when operating in the 5150-5250/5250-5350 MHz frequency range.

	BE	EE	HR	IT	CY	LV	LT
	BG	IE	LU	HU	MT	NL	AT
	CZ	EL	PL	PT	RO	SI	SK
	DK	ES	FI	SE	DE	FR	LI
	NO	IS	CH	TR	UK(NI)		

Manufacturer: Xiaomi Communications Co., Ltd.

Address: #019, 9th Floor, Building 6, 33 Xi'erqi Middle Road, Haidian District, Beijing, 100085, China

For further information, please go to www.mi.com

User Manual Version: V1.0

For further details, please scan the QR code to obtain the e-manual.

EU REP.
Xiaomi Technology Netherlands B.V.
Prinses Beatrixlaan 582, 2595BM, The Hague, The Netherlands
contact@support.mi.com

Importer:
Beryko s.r.o.
Pod Vinicemi 931/2, 301 00 Plzeň
www.beryko.cz

22
PAP