aceline

User Manual

Wired Mouse and
Mouse Pad Set
AGS-C09

Dear Customer,

Thank you for choosing our products.
We are pleased to offer you products and devices designed and manufactured to the highest standards of quality, functionality, and design. Before using the product, please read this manual carefully. It contains important information regarding your safety, as well as recommendations for the proper use and care of the product. Please keep this manual in a safe place and use it as a reference guide during future operation of the product.

Intended Use

The mouse is a device for controlling the cursor and issuing various commands to the computer.

Safety Precautions

- Do not modify the device in any way.
- To prevent short circuits, keep the device away from liquids and do not place open containers filled with liquids near it.
- Do not expose the device to electromagnetic radiation.
- The device is not intended for commercial use.
- The device is not intended for use by children or persons with reduced physical, sensory, or mental capabilities unless they are supervised by a person responsible for their safety. Do not allow children to play with the device.

Specifications

- Model: AGS-C09.
- Trademark: Aceline.
- Mouse type: Wired.
- Power supply: 5 V ⎓ 100 mA.
- Optical LED sensor: Instant A704F.
- Sensor resolution: 1200 / 2400 / 4800 / 7200 DPI.
- Maximum tracking speed: 60 IPS.
- Acceleration: 20 G.
- Polling rate: 125 Hz.
- Switches: HUANO 3 M.
- Lighting: Multicolor (4 colors).
- Connection type: USB Type-A.
- OS compatibility: Windows/Linux.
- Cable length: 1.8 m.
- Number of buttons: 6.
- Mouse pad dimensions: 220 × 180 × 3 mm.
- Mouse material: Plastic.
- Mouse pad material: Fabric with rubber backing.
- Scope of application: Domestic.

Package Contents

- Wired mouse.
- Mouse pad.
- User manual.

Device Diagram

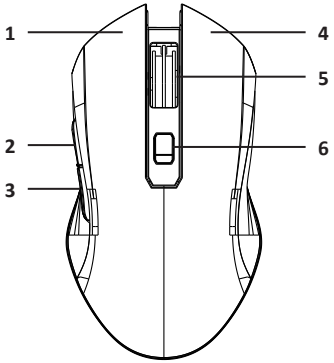

1. Left mouse button.
2. «Forward» side button.
3. «Back» side button.
4. Right mouse button.
5. Scroll wheel.
6. DPI button.

Operating Instructions

1. Connect the mouse to a USB port on your PC.
2. Wait for the operating system to complete the device driver installation.
3. The mouse is ready to use.

Note: If the mouse does not work or is not recognized by your computer:

- Make sure the USB connector is securely plugged in. Reconnect it if necessary.
- Try another USB port on the same computer.
- To determine whether the issue is with the USB port or the mouse, connect the mouse to another computer or connect a different USB device to the original computer.

Lighting Control

The mouse has 3 lighting modes. To switch between lighting modes, press one of the side buttons and the DPI button simultaneously.

- The lighting cycles through red, purple, blue, and pink with a slow pulsing effect. Pressing the DPI button changes the sensitivity level, while the lighting color indicates the current DPI setting:
  - Red — 1200 DPI.
  - Purple — 2400 DPI.
  - Blue — 4800 DPI.
  - Pink — 7200 DPI.
- The lighting pulses in a single color and flashes when the sensitivity level changes. Each DPI level corresponds to a specific number of flashes:
  - 1 flash — 1200 DPI.
  - 2 flashes — 2400 DPI.
  - 3 flashes — 4800 DPI.
  - 4 flashes — 7200 DPI.
- To turn off the lighting, press and hold the DPI button for 3–5 seconds.

Note: To turn the lighting back on, press and hold the DPI button again for 3–5 seconds.

Rules and Conditions for Installation, Storage, Transportation, Sale (Distribution), and Disposal

- The device does not require installation or permanent mounting.
- The device must be stored in its original packaging, on heated premises, both at the manufacturer's and at the consumer's sites. The ambient temperature should be between +5 °C and +40 °C, and the relative humidity should not exceed 80% (non-condensing). The storage area must be free from aggressive contaminants (e.g., acid or alkali vapors) that could cause corrosion.
- The device must be transported under dry conditions.
- The device requires careful handling. Protect it from exposure to dust, dirt, impact, moisture, fire, and other hazards.
- Sale or distribution of the device must be carried out in accordance with local legislation.
- Upon expiration of the device's service life, it must not be disposed of with unsorted household waste. Instead, it must be taken to an authorized collection point for electrical and electronic equipment for subsequent recycling and disposal in accordance with federal or local legislation. By ensuring proper disposal of this product, you help conserve natural resources and prevent potential harm to the environment and human health that may result from improper handling. For more detailed information about collection and disposal points for this product, please contact your local municipal authorities or your household waste disposal service.
- If a device malfunction is detected, immediately contact an authorized service center or dispose of the device.

Warranty Information

The manufacturer guarantees the device will function properly throughout the warranty period and be free from defects in materials and assembly. The warranty period commences on the date of purchase and applies to new products only. Warranty service includes free repair or replacement of defective parts that fail during the warranty period, provided the failure is not caused by consumer misuse and the product is operated in accordance with the user manual. Repairs or part replacements shall be performed at authorized service centers.

Warranty Period: 12 months
Service Life: 12 months

For the up-to-date list of authorized service centers, please visit:
https://www.dns-shop.ru/service-center/

Additional Information

Manufacturer: Huizhou Power 3 Electronical Technology Co., Ltd.
Changbu Village, Xinxu Town, Huiyang District, Huizhou City, Guangdong Province, China.

Made in China.

The product meets the requirements of the technical regulations of the TR CU (EAEU).

Product specifications, information and appearance are subject to change without prior notice, for quality improvement of our products.

Production date (mm.yyyy): _____V.1

aceline