aceline

User manual

Meat Grinder
MG-1500P

Contents

Intended Use **3**

Safety Precautions **3**

Specifications **4**

Device Diagram **5**

Operating Instructions **6**
Preparing for Use 6
Making Ground Meat 6
Sausage Making 7
Making Kibbeh 8
Reverse Function 8

Cleaning and Maintenance **9**

Troubleshooting Guide **9**

Rules and Conditions for Installation, Storage, Transportation, Sale (Distribution), and Disposal **10**

Warranty Information **11**

Additional information **11**

Dear Customer,

Thank you for choosing our products.
We are pleased to offer you appliances and devices designed and manufactured to the highest standards of quality, functionality, and design. Before using the device, please read this manual carefully. It contains important information regarding your safety, as well as recommendations for the proper use and care of the product. Please keep this manual in a safe place and use it as a reference guide during future operation of the product.

Intended Use

The meat grinder is intended for grinding meat and various products.

Safety Precautions

- Before plug in, make sure that the voltage of your home power source corresponds to the device's specifications.
- Do not use the device near sources of water or other liquids. Never place the motor unit under running water or immerse it in water.
- To keep supervision is necessary when device is used near children. Always keep the device and its cord out of children's reach.
- Immediately unplug the device if it malfunctions, or if the power cord or plug is damaged. Contact an authorized service center.
- Do not attempt to dissamble the motor unit to avoid electric shock. Maintenance and repairs should only be performed by qualified technicians at an authorized service center.
- Do not use the device if visible damage is detected. Unplug it immediately and contact an authorized service center.
- Always unplug the device when it is not used and before assembling, disassembling, replacing accessories or cleaning.
- Before disassembling, wait for all moving parts to come to a complete stop.
- Before plugging in the device, ensure it is properly assembled. Before each use, check that all parts are securely in place.
- Always turn off the device before unplugging it. To disconnect, grasp the plug — do not pull the cord itself.
- Never push food into the feed tube with your fingers or other objects — use the food pusher only.
- Exercise caution when handling the blades, especially when removing or cleaning them — the cutting edges are extremely sharp.
- Place the device only on flat, stable surfaces; do not place it near the edge of a table.
- Use only the accessories supplied with the device. Using of any other accessories may pose a risk to life and health and will void your warranty.
- Do not pull or move the device by the cord. Do not bend or wrap the cord around the device. Also ensure the power cord does not bend over the edge of the countertop or come into contact with hot surfaces or sharp edges.
- Do not use the device outdoors.

- Protect the device from impacts, drops, vibrations, and other mechanical stress.
- Do not operate the device without food (run empty).
- Never leave the device unattended while in use.
- To avoid overheating, do not run the device continuously for more than 1 minute. Allow the device to cool down for 1 minute between uses.
- This device is not intended for commercial use.
- This device is not intended for use by persons (including children) with reduced physical, sensory or mental capabilities, or lack of experience and knowledge, unless they have been given supervision or instruction concerning use of appliance by a person responsible for their safety. Children should be supervised to ensure that they do not play with the device.

Specifications

- Model: MG-1500P.
- Trademark: Aceline.
- Power supply: 220–230 V ~ 50–60 Hz.
- Rated power: 300 W.
- Maximum power: 800 W.
- Protection class (device): II.
- IP code: IPX0.
- Cord type: Y.
- Grinding capacity: 1,5 kg/min.
- Overheating and overload protection: yes.
- Body material: ABS plastic.
- Grinding plate material: metal.
- Cutting blade material: stainless steel.
- Scope of application: domestic.
- Package contents: meat grinder, kibbeh attachment, sausage stuffer attachment, grinding plate (2 pcs), user manual.

Device Diagram

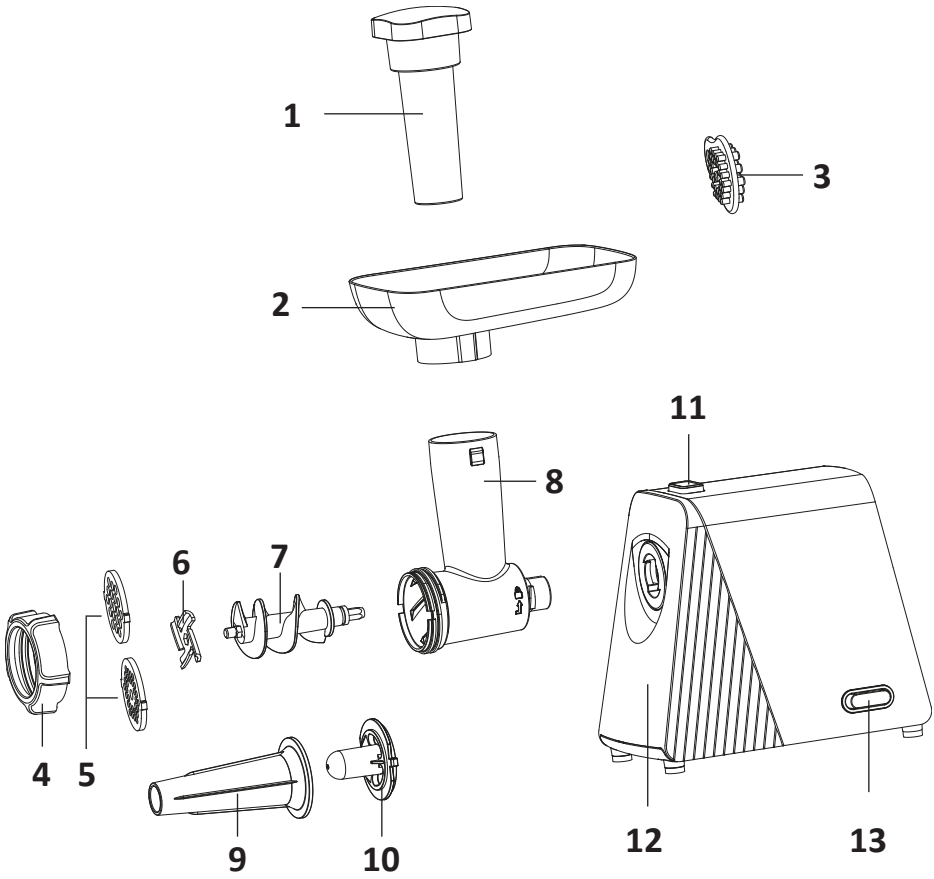

1. Pusher.
2. Filling tray.
3. Silicone cleaning disc.
4. Fixing ring.
5. Grinding plates.
6. Cutting blade.
7. Auger.
8. Feed tube.
9. Sausage stuffer attachment.
10. Kibbeh attachment.
11. Locking button.
12. Motor unit.
13. ON/OFF/Reverse button with indicator light.

Operating Instructions

Preparing for Use

Before first use of the device, thoroughly wash and dry all parts that come into contact with food.

CAUTION:

- Do not use the device to grind excessively hard foods, e.g. bones and nuts, or coarse fibered foods.
- Do not grind frozen meat. The meat must be thawed before grinding.
- The device is equipped with overheating protection, which will automatically shut off the meat grinder in the event of overheating. If the protection activates and the device turns off during use, unplug it and allow it to cool down completely (for at least 20 minutes).

Making Ground Meat

1. Ensure the device is unplugged and the power button is in the «OFF» position.
2. Assemble the parts as shown in the illustration below.
3. Insert the assembled feed tube unit into the mounting socket and turn it counterclockwise until it locks. To remove the feed tube, press the feed tube locking button, turn the feed tube clockwise and pull it towards you to remove it from the device.

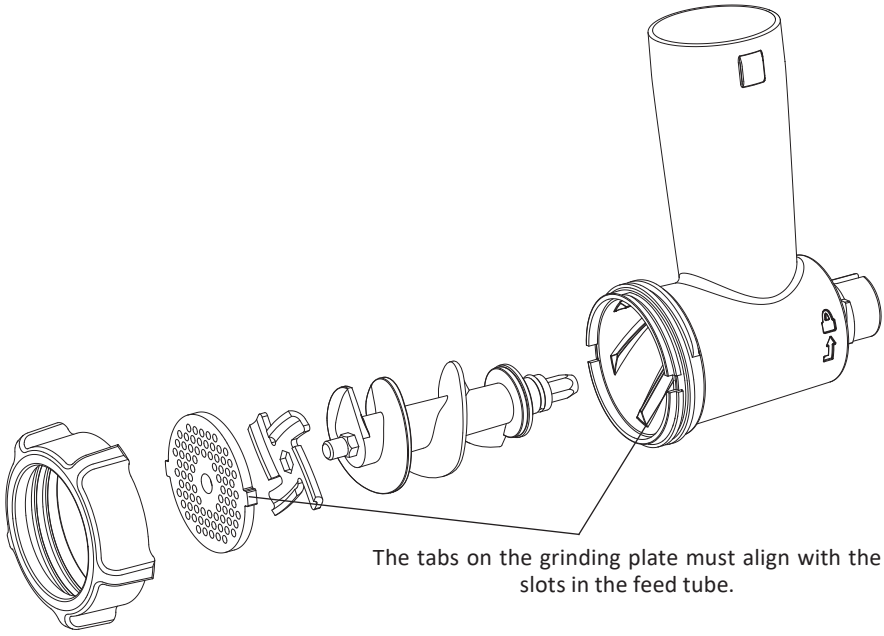

The tabs on the grinding plate must align with the slots in the feed tube.

4. Plug the power cord into an electrical outlet.
5. Remove all bones, tendons, and hard cartilage. Cut the meat into small cubes that fit easily into the feed tube.

6. Place small pieces of meat into the opening of filling tray and push it down using the pusher.
7. Position a clean container of suitable size under the fixing ring to catch the ground meat as it exits the grinder.
8. If the feed tube becomes clogged, turn off the device and clean it. Use the «REVERSE» function if necessary.
9. When finished, turn the power button to the «OFF» position, and then unplug the device.

Sausage Making

1. Ensure the device is unplugged and the power button is in the «OFF» position.
2. Assemble the parts as shown in the illustration below.
3. Insert the assembled feed tube unit into the mounting socket and turn it counterclockwise until it locks. To remove the feed tube, press the feed tube locking button, turn the feed tube clockwise and pull it towards you to remove it from the device.

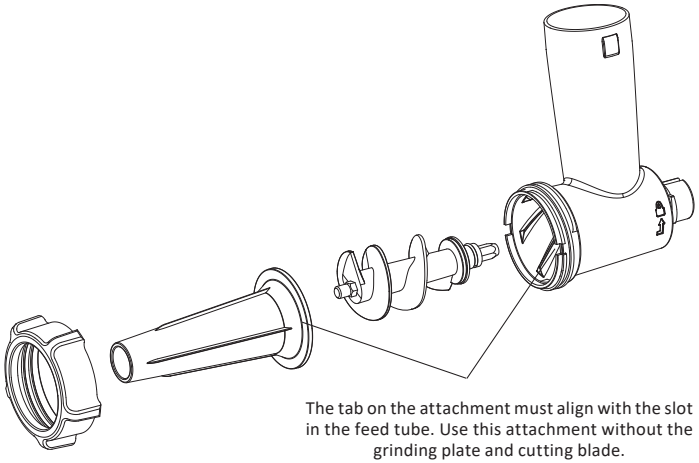

The tab on the attachment must align with the slot in the feed tube. Use this attachment without the grinding plate and cutting blade.

4. Plug the power cord into an electrical outlet.
5. Soak the sausage casings in warm water for 10 minutes.
6. Slide the wet casing over the sausage attachment as shown in the illustration. Tie a knot at the end. Do not cover the air vent on the attachment.
7. Place the ground meat into the filling tray.
8. Turn the power button to the «ON» position and feed the meat through the grinder, gently pressing down on the pusher.
9. Pinch and twist the casing at your desired intervals.
10. When finished, remove the casing from the attachment and tie a knot.
11. When finished, turn the power button to the «OFF» position, and then unplug the device.

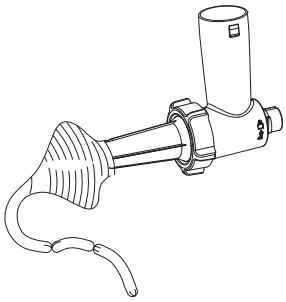

Making Kibbeh

Kibbeh is a traditional Eastern meat dish. Kibbeh is often described as meat patties, sausages, or cutlets with filling. To make kibbeh, ensure the ground meat mixture is prepared in advance.

1. Ensure the device is unplugged and the power button is in the «OFF» position.
2. Assemble the parts as shown in the illustration below.
3. Insert the assembled feed tube unit into the mounting socket and turn it counterclockwise until it locks. To remove the feed tube, press the feed tube locking button, turn the feed tube clockwise and pull it towards you to remove it from the device.
4. Turn on the meat grinder and feed the kibbeh mixture through the feed tube.
5. Place a clean container of suitable size under the fixing ring to catch the kibbeh as it exits the grinder.

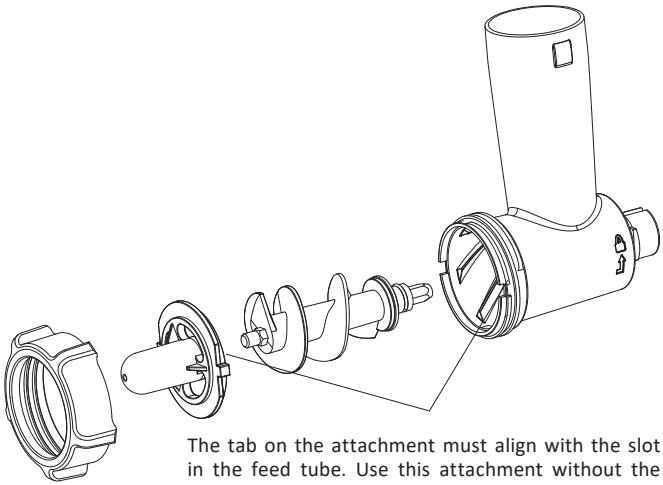

The tab on the attachment must align with the slot in the feed tube. Use this attachment without the grinding plate and cutting blade.

6. When finished, turn the power button to the «OFF» position, and then unplug the device.

Reverse Function

1. If the meat grinder mechanism jams, immediately turn off the device, then engage the reverse function by moving the power button to the « ↻ » position for a short time.
2. Move the power button from the « ↻ » position to the «ON» position. Check if the problem has been resolved.
3. If the mechanism is still jammed, repeat the steps above until the problem is resolved.

Cleaning and Maintenance

Note: It is recommended to clean the meat grinder immediately after use.

1. Turn off the device and unplug it from the power source.
2. Remove the pusher and take off the filling tray. Detach the feed tube from the motor unit. To remove the feed tube, press the locking button, turn the feed tube clockwise, and pull it towards you to detach it from the device.
3. Unscrew the fixing ring and remove all removable parts (cutting blade, auger, grinding plate, etc.).
4. Wash the parts in warm soapy water. If necessary, use the silicone cleaning disc (included). Place the grinding plate over the silicone cleaning disc, then wash it in soapy water.
5. Rinse the parts with clean water and dry them immediately.
6. Wipe the motor unit with a slightly damp cloth. Do not use abrasive or harsh agents.
7. Before storing, ensure that the device and all parts are completely dry.

CAUTION:

- Removable parts are not dishwasher safe.
- To avoid short circuits, do not immerse the motor unit or power cord in water.

Troubleshooting Guide

Problem	Posible cause	Solution
The device does not work	No power	Ensure the device is plugged into the power outlet
Specific odor during first use	The device is new	This is normal. The odor should disappear after a few uses
Sudden stop during operation	Voltage is too low	Check if the voltage is too low
	Overloaded with food	Turn off the power and remove excess food
	The device has overheated	Allow the device to cool down for 30–60 minutes
The device makes a loud noise during operation	The meat grinder is assembled incorrectly	Turn off the device and reassemble it, following the instructions in the «Operating Instructions» section
	Motor unit malfunction	Contact an authorized service center

Rules and Conditions for Installation, Storage, Transportation, Sale (Distribution), and Disposal

- The installation and mounting conditions for the device are described in the «Operating Instructions» section of this user manual.
- The device must be stored in its original packaging, on heated premises, both at the manufacturer's and at the consumer's sites. The ambient temperature should be between +5 °C and +40 °C, and the relative humidity should not exceed 80% (non-condensing). The storage area must be free from aggressive contaminants (e.g., acid or alkali vapors) that could cause corrosion.
- The device must be transported in a dry place.
- The device requires careful handling. Protect it from exposure to dust, dirt, impact, moisture, fire, and other hazards.
- Sale or distribution of the device must be carried out in accordance with local legislation.
- Upon expiration of the device's service life, it must not be disposed of with unsorted household waste. Instead, it must be taken to an authorized collection point for electrical and electronic equipment for subsequent recycling and disposal in accordance with federal or local legislation. By ensuring proper disposal of this product, you help conserve natural resources and prevent potential harm to the environment and human health that may result from improper handling. For more detailed information about collection and disposal points for this product, please contact your local municipal authorities or your household waste disposal service.
- If a device malfunction is detected, immediately contact an authorized service center or dispose of the device.

Warranty Information

The manufacturer guarantees the device will function properly throughout the warranty period and be free from defects in materials and assembly. The warranty period commences on the date of purchase and applies to new products only. Warranty service includes free repair or replacement of defective parts that fail during the warranty period, provided the failure is not caused by consumer misuse and the product is operated in accordance with the user manual. Repairs or part replacements shall be performed at authorized service centers.

Warranty Period: 24 months

Service Life: 36 months

For the up-to-date list of authorized service centers, please visit:
https://www.dns-shop.ru/service-center/

Additional information

Manufacturer: Zhejiang Lanbao Electrical Appliance Co.,Ltd.
No.899, East Kaifa Rd, Zhouxiang Town, Cixi City, Ningbo, Zhejiang, CHINA.

Made in China.

The product meets the requirements of the technical regulations of the TR CU (EAEU).

Product specifications, information and appearance are subject to change without prior notice, for quality improvement of our products.

Production date (mm.yyyy): _____V.1

aceline