aceline

User Manual

Moka Pot
MY-300
MY-450

Dear Customer,

Thank you for choosing our products.
We are pleased to offer you products and devices designed and manufactured to the highest standards of quality, functionality, and design. Before using the product, please read this manual carefully. It contains important information regarding your safety, as well as recommendations for the proper use and care of the product. Please keep this manual in a safe place and use it as a reference guide during future operation of the product.

Intended Use

The Moka pot is designed for brewing coffee on gas, induction, and electric stoves.

Safety Precautions

- Before using the product, ensure all parts are present and intact.
- To ensure proper functionality, regularly check the safety valve, filter, and silicone seal of your coffee maker.
- The product is intended for domestic use only.
- This product is not intended for use by children or persons with reduced physical, sensory, or mental capabilities, unless they are supervised by a person responsible for their safety. Do not allow children to play with the product.
- Do not leave the product on the stove unattended.
- Store the product in a clean, dry place.
- Do not heat the coffee maker without water or with an insufficient amount of water.
- During operation, the metal parts of the product become very hot. Do not touch the hot parts of the coffee maker.
- When using a gas stove, ensure that the flame is centered on the bottom of the coffee maker and does not reach the side walls.
- Use only ground coffee. Do not use instant coffee to avoid clogging the filter.
- Disassemble the coffee maker only after it has cooled down completely.
- If any damage is detected, immediately discontinue use and contact an authorized service center.
- This product is not intended for commercial use.

Device Diagram

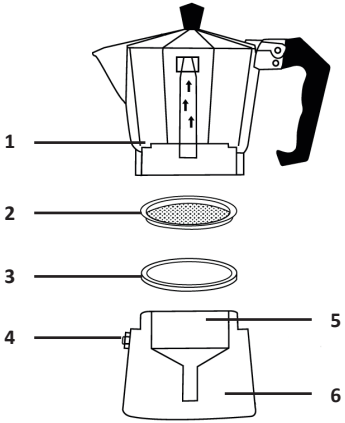

1. Upper chamber.
2. Filter plate.
3. Sealing ring.
4. Safety valve.
5. Filter funnel.
6. Water reservoir.

Specifications

Model	MY-300	MY-450
Trademark	Aceline	
Capacity	0.3 L	0.45 L
Number of cups	6	9
Material	Stainless steel, plastic, silicone	
Scope of application	Domestic	
Package contents	Moka pot, user manual	

Operating Instructions

Before first use, it is recommended to thoroughly wash all parts of the coffee maker with a mild detergent and let them dry completely.

1. Pour clean, cold water into the lower reservoir so that the water level does not reach the safety valve.
2. Insert the funnel into the lower reservoir.
3. Fill the funnel with ground coffee to the brim. Do not tamp the coffee to avoid damaging the filter.
4. Insert the filter and sealing ring into the upper chamber and screw it onto the lower reservoir. Ensure both parts are securely fastened.
5. Place the coffee maker on the burner and turn on the heat. When the upper chamber is filled with brewed coffee, remove the coffee maker from the stove.

Notes

- It is recommended to place the coffee maker on low heat. Excessive heat does not speed up the brewing process but rather overheats the upper part of the coffee maker, which may cause the freshly brewed coffee to boil.
- The safety valve is adjusted to prevent excessive pressure in the reservoir. Avoid clogging or damaging it.

Cleaning and Maintenance

- Before cleaning, the coffee maker must cool down completely.
- Disassemble all parts of the coffee maker.
- Wash the coffee maker with warm water and a mild dishwashing detergent.
- Clean the coffee maker with a soft cloth.
- Do not use metal scouring pads, solvents, or abrasive cleaning agents.
- Wipe the coffee maker dry. Dry all parts of the product separately.
- To maintain the shine of the coffee maker, it is recommended to polish its surface with a metal polishing agent.
- The product is not suitable for washing in a dishwasher.

Troubleshooting Guide

Issue	Possible cause	Solution
Excessive steam escaping through the safety valve	Coffee grounds are packed too tightly	Do not tamp the coffee
	Overheating	Ensure the coffee maker does not overheat
	Overfilling	Fill the lower reservoir with water to a level below the safety valve
Steam escaping between the chambers	Coffee maker parts are not screwed on tightly enough	Screw the parts on more tightly and check the tightness of the connections
Coffee grounds in the upper chamber	Coffee is ground too finely or has a high oil content	Try using a coarser grind
Insufficient volume of brewed coffee	Some water may escape as steam when excessive pressure builds up; this is a normal phenomenon	Try brewing at a lower temperature to ensure a smoother, more gradual heating process

Warranty Information

The manufacturer guarantees the device will function properly throughout the warranty period and be free from defects in materials and assembly. The warranty period commences on the date of purchase and applies to new products only. Warranty service includes free repair or replacement of defective parts that fail during the warranty period, provided the failure is not caused by consumer misuse and the product is operated in accordance with the user manual. Repairs or part replacements shall be performed at authorized service centers.

Warranty Period: 24 months
Service Life: 24 months

For the up-to-date list of authorized service centers, please visit:
https://www.dns-shop.ru/service-center/

Rules and Conditions for Installation, Storage, Transportation, Sale (Distribution), and Disposal

- The product does not require installation or permanent mounting.
- The product must be stored in its original packaging, on heated premises, both at the manufacturer's and at the consumer's sites. The ambient temperature should be between +5 °C and +40 °C, and the relative humidity should not exceed 80% (non-condensing). The storage area must be free from aggressive contaminants (e.g., acid or alkali vapors) that could cause corrosion.
- The product must be transported under dry conditions.
- The product requires careful handling. Protect it from exposure to dust, dirt, impact, moisture, fire, and other hazards.
- Sale or distribution of the product must be carried out in accordance with local legislation.
- Disposal of this product must be carried out in accordance with local waste recycling regulations. By ensuring proper disposal of this product, you help prevent potential harm to the environment and human health resulting from uncontrolled waste disposal and promote the sustainable reuse of material resources. For more detailed information on collection and disposal points for this product, please contact your local municipal authorities or household waste collection service.
- If a product malfunction is detected, immediately contact an authorized service center or dispose of the product.

Additional Information

Manufacturer: Zhejiang Shenglu Kitchenware Co.,Ltd.
Yanzhou Road, Economic Development Zone Lanxi, China.

Made in China.

The product meets the requirements of the applicable GOST standards of the Russian Federation.

Product specifications, information and appearance are subject to change without prior notice, for quality improvement of our products.

Production date (mm.yyyy): _____ v.1

aceline