AURORA

27" GAMING MONITOR

ARDOR GAMING

Contents

Intended Use 3
Safety Precautions 3
Assembly 4
Removing the Monitor Stand 5
Monitor Placement 6
Connecting the Monitor 6
Device Diagram 7
Control Panel 8
Cleaning and Maintenance 9
Troubleshooting Guide 9
Specifications 10
Package contents 10
Rules and Conditions for Installation, Storage, Transportation, Sale (Distribution), and Disposal 11
Warranty Information 11
Additional Information 11

Monitor
ARDOR GAMING AURORA 27"
User Manual

Dear Customer,

Thank you for your trust!

Our team fully shares your passion for gaming, which is why we put every effort into making your experience with our gaming accessories unforgettable. We wish you many new victories and the brightest impressions ahead!

Intended Use

The monitor is designed to display information from a personal computer.

Safety Precautions

- Before connecting the monitor, make sure your power supply voltage matches the monitor's electrical specifications.
- Place the device only on a flat, stable surface.
- Avoid using the monitor near devices that generate magnetic fields, such as electric motors, TVs, and other equipment.
- Do not place heavy objects on the video cable or power cord. Do not route cables through areas where they may be accidentally pulled or tripped over.
- Protect the power cord and cables from physical damage, such as pinching, cutting, twisting, and other mechanical stress.
- Do not touch the power cord or cables with wet hands.
- Choose a location for the monitor that minimizes reflections and glare on the screen.
- Do not attempt to disassemble the device yourself. All maintenance and repairs must only be performed by qualified personnel at an authorized service center.
- Do not block the ventilation openings or allow foreign objects to enter the device housing.
- Protect the device from moisture, dust, and extreme temperatures to prevent damage.
- Always disconnect the device from the power supply before cleaning it or if it will not be used for an extended period.
- Use only a soft, dry cloth to clean the screen. Do not use liquids or chemicals.
- Do not use the device if it has been dropped or if the power cord or device shows visible signs of damage. Contact an authorized service center.
- If the device malfunctions, stop using it immediately and contact an authorized service center.
- The device is not intended for use by children or persons with reduced physical, sensory, or mental capabilities unless they are supervised by a person responsible for their safety.
- The device is not intended for commercial use.

Assembly

Assembling and Installing the Monitor Stand

- Remove the monitor from its packaging and place it face down on a flat, soft, stable surface.
- Connect the bottom of the stand arm to the stand base and secure it with the supplied screw.

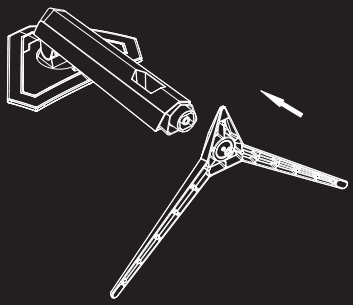

- Align the two hooks on the stand assembly with the two mounting holes on the monitor. Insert the stand assembly into the mounting slots in the direction indicated by the arrow.

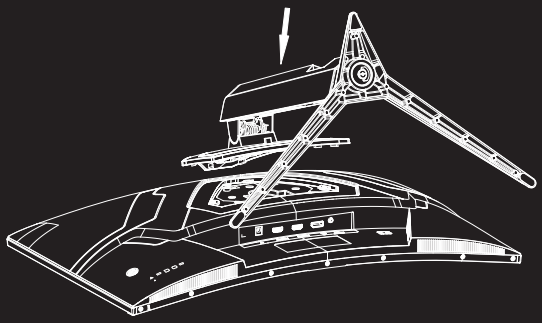

- Press the stand arm in the direction indicated by the arrow.

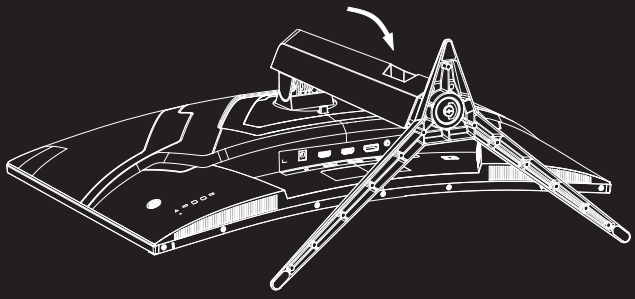

Removing the Monitor Stand

- Slide the release latch to unlock the stand arm.

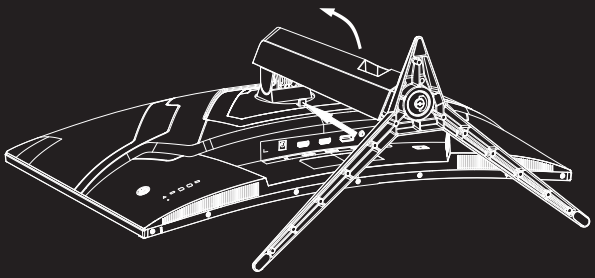

- Tilt the stand arm in the direction indicated by the arrow to remove it.

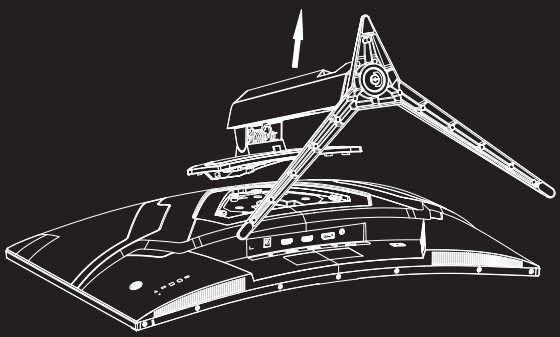

- Unscrew the screw securing the stand base and pull the base in the direction indicated by the arrow.

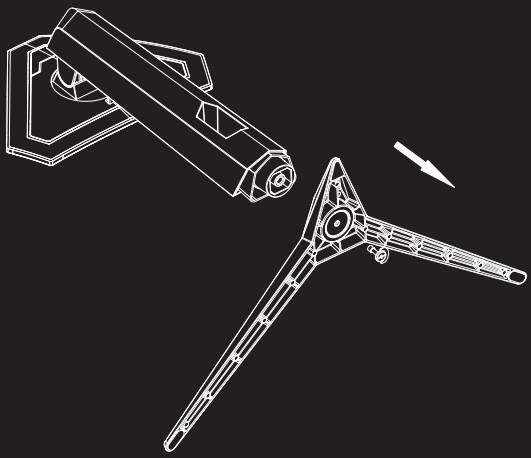

Monitor Placement

Do not install the monitor in poorly ventilated areas. Ensure adequate air circulation around the device, as shown in the figure below.

CAUTION! The images are provided for reference only and may differ slightly from the actual device.

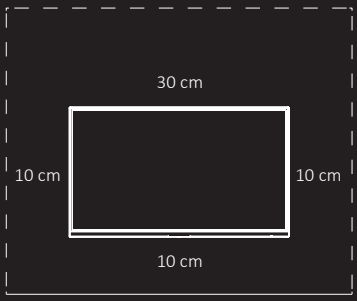

Wall-mounted monitor

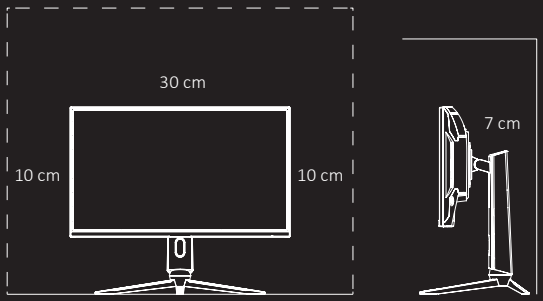

Monitor on a stand

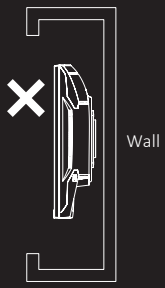

Obstruction to airflow

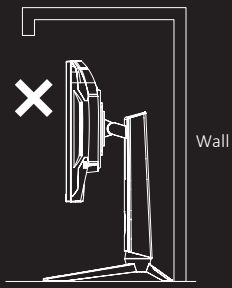

Obstruction to airflow

Connecting the Monitor

1. Make sure both the monitor and the PC are turned off and disconnected from the power supply.
2. Connect the HDMI/DP cable to the corresponding port on the monitor and connect the other end to the appropriate port on your computer's graphics card.
3. Connect the supplied power adapter to the monitor's DC power input, then connect the adapter to a suitable power outlet.
4. Make sure the power cord and cables are properly connected. Turn on the PC.
5. Set the appropriate screen resolution and refresh rate in the Windows display settings.

Device Diagram

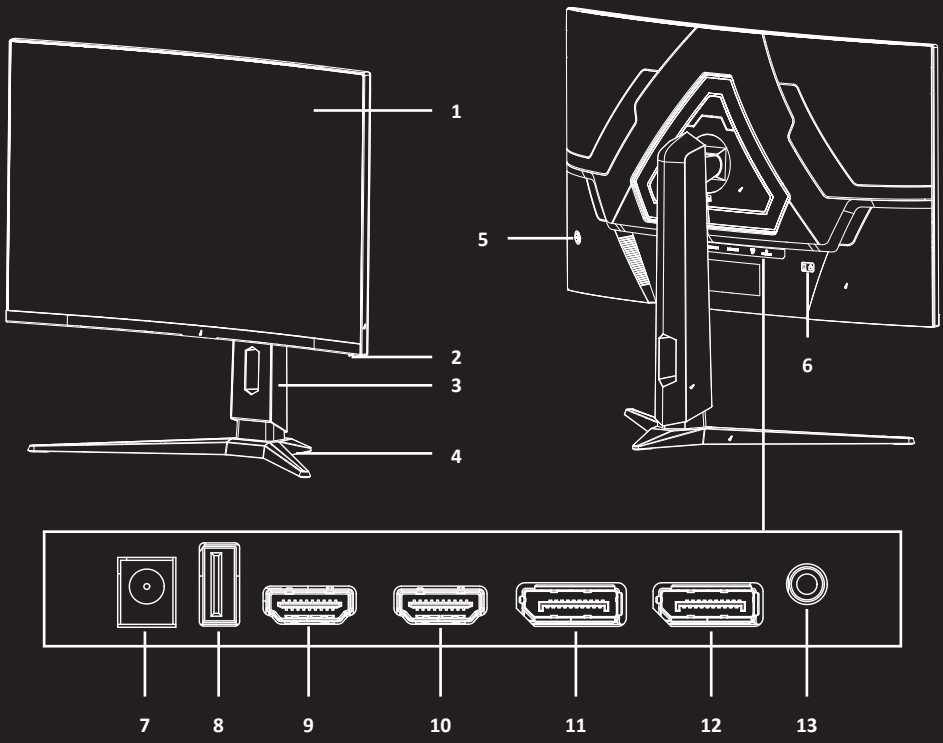

1. Screen
2. Power indicator:
   - Solid white — the device is connected to the power supply
   - Flashing orange — the device is in power-saving mode
3. Stand arm
4. Monitor stand
5. Joystick / control button
6. Kensington security lock slot
7. Power adapter input (DC)
8. USB 2.0 Type-A port
9. HDMI 1 port
10. HDMI 2 port
11. DisplayPort 1 (DP1)
12. DisplayPort 2 (DP2)
13. Headphone jack

Control Panel

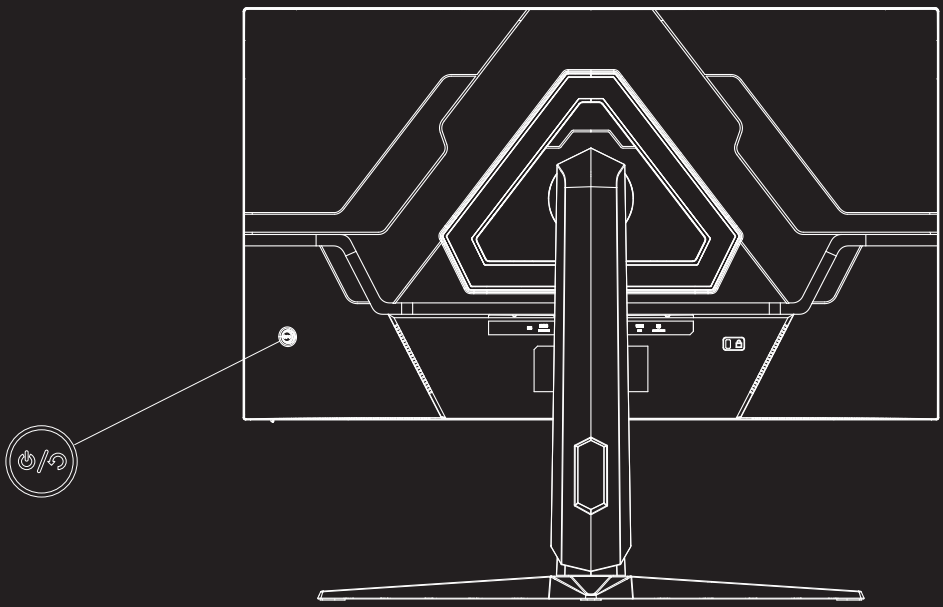

Joystick up:

- Turn off the monitor.
- In the on-screen display (OSD) menu: Increase the selected setting.

Joystick down:

- Open the mode settings menu.
- In the OSD menu: Decrease the selected setting.

Joystick left:

- Exit the OSD menu.
- In the OSD menu: Return to the previous menu level.

Joystick right:

- Select the input source.
- In the OSD menu: Confirm the settings and proceed to the next menu level.

Center Button:

- Short press: Open the OSD menu.
- In the OSD menu: Confirm the settings and proceed to the next menu level.

CAUTION! If the computer's video signal exceeds the monitor's supported frequency range, the synchronization signals will automatically be disabled to protect the display. To restore normal operation, adjust the computer's video output frequency to a value within the supported range.

Cleaning and Maintenance

- Protect the device from direct sunlight.
- Install the monitor in a well-ventilated area.
- Do not place heavy objects on top of the monitor.
- Install the monitor in a dry, dust-free location.
- Do not place the device near sources of magnetic fields, such as audio systems, TVs, or other equipment.

CAUTION!

- If the monitor produces unusual sounds or odors, immediately disconnect it from the power supply and contact an authorized service center.
- Do not remove the monitor's cover or rear panel. Doing so may cause electric shock or fire. The internal components are not user-serviceable. Maintenance and repairs must only be performed by qualified personnel at an authorized service center.

Troubleshooting Guide

Issue	Possible Cause	Solution
The power indicator is off	The monitor is not connected to the power supply or is turned off	Check the monitor's power connection and make sure it is turned on
No image on the screen	The signal cable is disconnected or connected incorrectly	Make sure the cables are securely connected
	The wrong input source is selected	Change the input source using the OSD menu
The image is blurry, displayed incorrectly, or not fully visible	Incorrect screen refresh rate	Adjust the refresh rate
	The cable is damaged or of poor quality	Replace the cable
	Incorrect screen resolution	Set the appropriate resolution
	The monitor cannot detect the signal	Use the auto-adjustment function in the OSD menu
The image is too dark	Low brightness and contrast settings	Adjust the brightness and contrast using the OSD menu
Incorrect colors	The monitor port or video cable connector is damaged, or the cable is not fully inserted	Connect the cable properly. Replace it if necessary
	Incorrect color settings	Adjust the color settings using the OSD menu or restore the default settings
Dark or bright spots appear on the screen when the monitor is turned on	Normal variation caused by uneven warm-up of the backlight	Wait for the backlight to warm up. The spots should disappear
Image distortion, flickering, or shaking	Incorrect screen resolution or refresh rate	Adjust the screen resolution and refresh rate
The monitor does not recognize a connected device	The port is damaged	Try another port. If the problem persists, contact an authorized service center
	The device is incompatible with the monitor	Make sure the device supports the monitor's connection interfaces
Lines appear on the screen or the image is distorted	The signal cable is damaged or connected incorrectly	Make sure the cable is securely connected or replace it
	The graphics card is faulty	Check that the graphics card is working properly
	Driver issues	Update or reinstall the drivers

Specifications

- Model: AQ27H3
- Trademark: ARDOR GAMING
- Screen diagonal: 27″
- Contrast ratio: 5000:1
- Maximum refresh rate: HDMI — 144 Hz; DP — 200 Hz
- Maximum supported resolution: 2560 × 1440
- Maximum number of colors: Over 1 billion
- Speaker power: 2 × 2 W
- Power supply: 100–240 V ~ 50–60 Hz
- RGB lighting
- Power consumption: 54 W
- Sleep mode power consumption: 0.5 W
- Screen curvature: 1500R
- VESA mounting pattern: 75 × 75 mm
- Connectors: DisplayPort × 2, HDMI × 2, AUDIO OUT, USB Type-A
- Aspect ratio: 16:9
- Panel technology: VA
- Power cord attachment type: X
- Panel backlight type: LED
- Vertical viewing angle: 178°
- Horizontal viewing angle: 178°
- Annual energy consumption: 26 kWh/year
- Brightness: 300 cd/m^2
- Pixel response time (GtG): 3 ms
- Pixel response time (MPRT): 1 ms
- Low Blue Light technology
- Power adapter protection class: II
- Device protection class: III
- IP code: IP20
- Dimensions (W × H × D): 611.3 × 520.6 × 273.2 mm
- Net weight: 5.45 kg
- Scope of application: Domestic

Power adapter specifications

- Input: 100–240 V ~ 50–60 Hz
- Output: 12 V ⎓ 4.5 A

Package Contents

- Monitor
- Stand
- HDMI cable
- DP cable
- Power adapter
- Screwdriver
- Screws
- Cable clip
- Screen cleaning cloth
- User manual

Rules and Conditions for Installation, Storage, Transportation, Sale (Distribution), and Disposal

- The installation and mounting conditions for the device are described in the «Assembly» section of this user manual.
- The device must be stored in its original packaging, on heated premises, both at the manufacturer's and at the consumer's sites. The ambient temperature should be between +5 °C and +40 °C, and the relative humidity should not exceed 80% (non-condensing). The storage area must be free from aggressive contaminants (e.g., acid or alkali vapors) that could cause corrosion.
- The device must be transported under dry conditions.
- The device requires careful handling. Protect it from exposure to dust, dirt, impact, moisture, fire, and other hazards.
- Sale or distribution of the device must be carried out in accordance with local legislation.
- Upon expiration of the device's service life, it must not be disposed of with unsorted household waste. Instead, it must be taken to an authorized collection point for electrical and electronic equipment for subsequent recycling and disposal in accordance with federal or local legislation. By ensuring proper disposal of this product, you help conserve natural resources and prevent potential harm to the environment and human health that may result from improper handling. For more detailed information about collection and disposal points for this product, please contact your local municipal authorities or your household waste disposal service.
- If a device malfunction is detected, immediately contact an authorized service center or dispose of the device.

Warranty Information

The manufacturer guarantees the device will function properly throughout the warranty period and be free from defects in materials and assembly. The warranty period commences on the date of purchase and applies to new products only. Warranty service includes free repair or replacement of defective parts that fail during the warranty period, provided the failure is not caused by consumer misuse and the product is operated in accordance with the user manual. Repairs or part replacements shall be performed at authorized service centers.

Warranty Period: 36 months

Service Life: 48 months

For the up-to-date list of authorized service centers, please visit: https://www.dns-shop.ru/service-center/

Additional Information

Manufacturer: HONG KONG OVERVIEW INDUSTRY CO., LIMITED.
ROOM 20 UNIT B3, 07/FL TUEN MUN INDUSTRIAL CENTRE, NO. 2 SAN PING CIRCUIT, TUEN MUN, HONG KONG.

Made in China.

The product meets the requirements of the technical regulations of the TR CU (EAEU).

Product specifications, information and appearance are subject to change without prior notice, for quality improvement of our products.

Production date (mm.yyyy): _____ v.1

LEARN MORE:
ARDOR-GAMING.COM
VK.COM/ARDOR_GAMING