V2

FROSTWAVE SC

360 MM LIQUID COOLING SYSTEM

ARDOR GAMING

Liquid Cooling System
ARDOR GAMING Frostwave 360 SC V2
User Manual

Dear Customer,

Thank you for your trust!

Our team fully shares your passion for gaming, which is why we put every effort into making your experience with our gaming accessories unforgettable. We wish you many new victories and the brightest impressions ahead!

Intended Use

The liquid cooling system is designed to dissipate heat from the processor and keep it within its normal operating temperature range.

Safety Precautions

- Do not modify the device.
- The device is not intended for commercial use.
- The device is not intended for use by children or persons with reduced physical, sensory, or mental capabilities unless supervised by a person responsible for their safety. Do not allow children to play with the device.
- Do not open the device or attempt to repair it yourself.
- Maintenance and repairs must be performed only by qualified personnel at an authorized service center.

Assembly

Components

A 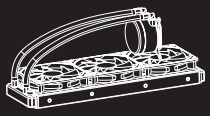 **Liquid cooling system**	B  **Intel backplate**	C 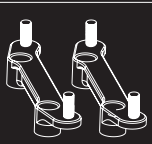 **AMD mounting brackets**
D  **Thermal paste**	E  **Screws (4 pcs)**	G1  **Case mounting screws: 240/280 mm — 8 pcs; 360 mm — 12 pcs**
G2  **AMD mounting screws (5 pcs)**	G3  **Intel standoff screws (4 pcs)**	G4  **LGA 2011 standoff screws (4 pcs)**

Installation for Intel Processors

Step 1

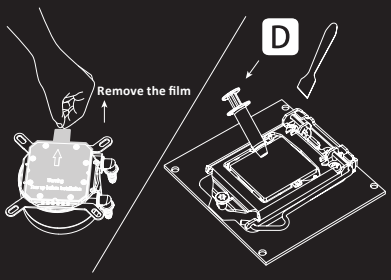

17XX/1851
115X/1200

Step 2

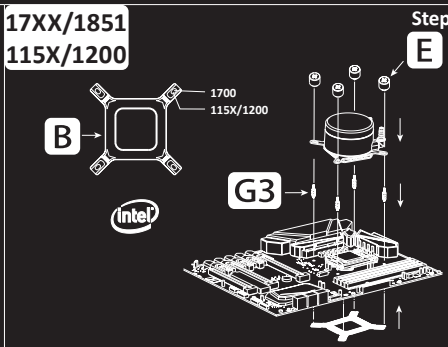

Step 3

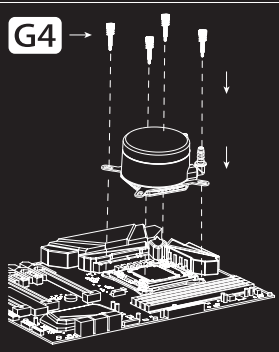

Step 4

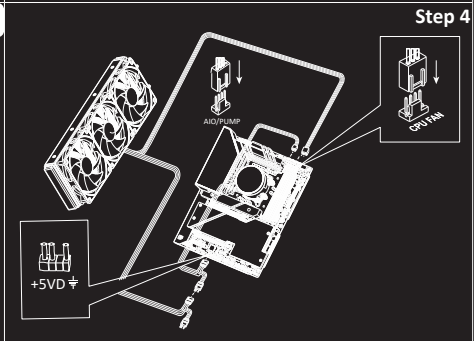

Step 5

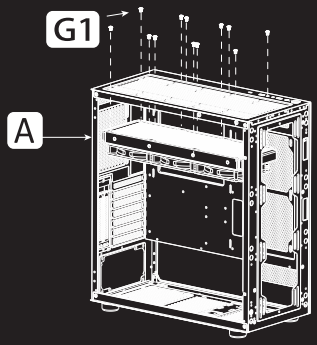

Installation for AMD Processors

Step 1

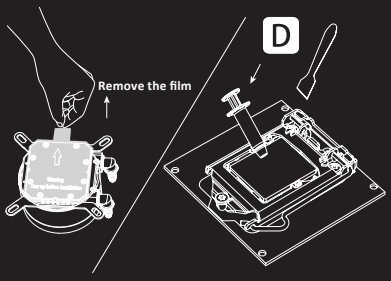

Step 2

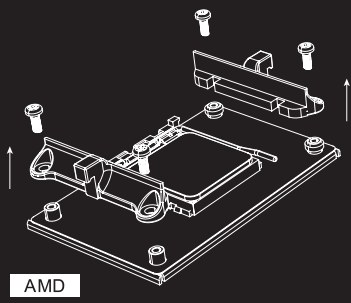

Step 3

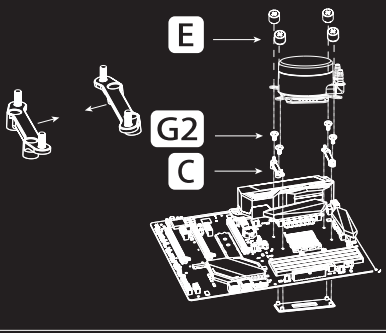

Step 4

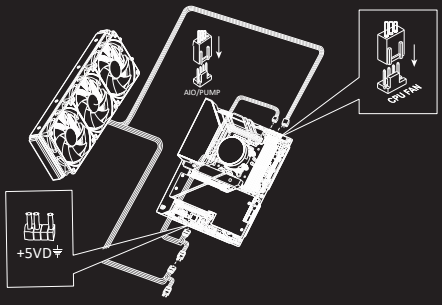

Step 5

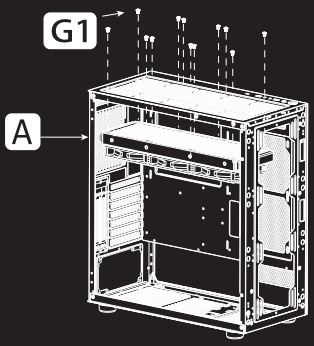

Specifications

- Model: SC V2
- Trademark: ARDOR GAMING
- Radiator size: 360 mm
- Radiator material: Aluminum
- Tube length: 380 ± 10 mm
- Pump speed: 2500 RPM ± 10%
- Pump power connector: 3-pin
- Fan dimensions: 120 × 120 × 25 mm
- Maximum fan noise level: 33.1 dB(A)
- Maximum airflow: 76 CFM
- Fan speed: 800–1800 ± 200 RPM
- Fan power connector: 4-pin PWM
- Fan rated voltage: 12 V
- Fan rated current: 0.35 A ± 10%
- Bearing type: Hydrodynamic
- Lighting power connector: 5 V 3-pin ARGB
- LED type: ARGB
- Compatible CPU sockets:
  - Intel: LGA 17XX / 115X / 1200 / 2011 / 1851
  - AMD: AM4 / AM5
- Number of fans: 3
- Automatic fan speed control: PWM
- Fan power supply: 12 V ⎓ 0.35 A
- Lighting power supply: 5 V ⎓ 0.2–0.44 A
- Pump dimensions: 74 × 89.2 × 51.8 ± 1 mm
- Scope of application: Domestic

Package Contents

- Fan — 3 pcs
- Pump
- Tubes
- Mounting hardware kit
- User manual

Rules and Conditions for Installation, Storage, Transportation, Sale (Distribution), and Disposal

- The installation and mounting conditions for the device are described in the «Assembly» section of this user manual.
- The device must be stored in its original packaging, on heated premises, both at the manufacturer's and at the consumer's sites. The ambient temperature should be between +5 °C and +40 °C, and the relative humidity should not exceed 80% (non-condensing). The storage area must be free from aggressive contaminants (e.g., acid or alkali vapors) that could cause corrosion.
- The device must be transported under dry conditions.
- The device requires careful handling. Protect it from exposure to dust, dirt, impact, moisture, fire, and other hazards.
- Sale or distribution of the device must be carried out in accordance with local legislation.
- Upon expiration of the device's service life, it must not be disposed of with unsorted household waste. Instead, it must be taken to an authorized collection point for electrical and electronic equipment for subsequent recycling and disposal in accordance with federal or local legislation. By ensuring proper disposal of this product, you help conserve natural resources and prevent potential harm to the environment and human health that may result from improper handling. For more detailed information about collection and disposal points for this product, please contact your local municipal authorities or your household waste disposal service.
- If a device malfunction is detected, immediately contact an authorized service center or dispose of the device.

Warranty Information

The manufacturer guarantees the device will function properly throughout the warranty period and be free from defects in materials and assembly. The warranty period commences on the date of purchase and applies to new products only. Warranty service includes free repair or replacement of defective parts that fail during the warranty period, provided the failure is not caused by consumer misuse and the product is operated in accordance with the user manual. Repairs or part replacements shall be performed at authorized service centers.

Warranty Period: 36 months

Service Life: 36 months

For the up-to-date list of authorized service centers, please visit: https://www.dns-shop.ru/service-center/

Additional Information

Manufacturer: Dongguan Yichen Intelligent Electronics Co., Ltd.
No. 1 Building, No. 7, Shichong Industrial Road, Hengli Town, Dongguan City, Guangdong Province, China.

Made in China.

Product specifications, information and appearance are subject to change without prior notice, for quality improvement of our products.



Production date (mm.yyyy): _____ V.1

LEARN MORE:
ARDOR-GAMING.COM
VK.COM/ARDOR_GAMING