# MYSTIC CM1

*CASE*

ARDOR GAMING

# ARDOR GAMING Mystic CM1 Minicase
# User Manual

## Dear Customer,

Thank you for your trust!
Our team fully shares your passion for gaming, which is why we put every effort into making your experience with our gaming accessories unforgettable. We wish you many new victories and the brightest impressions ahead!

## Safety Precautions

- Do not modify the case in any way.
- The case is not intended for commercial use.
- The case is not intended for use by children or persons with reduced physical, sensory, or mental capabilities unless they are supervised by a person responsible for their safety. Do not allow children to play with the case.

## Package Contents

- PC case
- Mounting hardware kit:
  - Motherboard and SSD mounting screws — 18 pcs
  - Power supply and graphics card mounting screws — 6 pcs
  - Motherboard standoffs — 3 pcs
  - 3.5″ HDD mounting screws — 8 pcs
  - Plastic cable ties — 5 pcs
- User manual

## Specifications

- Case type: Minicase
- Metal thickness: 0.6 mm
- Number of expansion slots: 4
- Fan controller: No
- Fan support on the power supply compartment: No
- Fan support in the bottom HDD mounting area: 2 × 120 mm
- Top fan support: 2 × 120 mm
- Bottom fan support: 2 × 120 mm
- Rear fan support: 1 × 120 mm
- Front fan support: No
- Side fan support: 2 × 120 mm
- Rear liquid cooling radiator support: 120 mm
- Top liquid cooling radiator support: 240 mm / 280 mm
- Side liquid cooling radiator support: Not supported
- Front liquid cooling radiator support: Not supported
- Weight: 3.7 kg
- Liquid cooling system support
- Number of 2.5″ drive bays: 3
- Number of 3.5″ drive bays: 2
- Maximum CPU cooler height: 160 mm
- Maximum graphics card length: 320 mm
- Case material: Metal
- Front panel material: Tempered glass
- Power supply form factor: ATX
- Supported motherboard form factors: Micro-ATX, Mini-ITX
- Dimensions (W × D × H): 276 × 339 × 330 mm
- Pre-installed fans: None
- Scope of application: Domestic

# Assembly

## Removing the Side Panel

Unscrew the screws securing the glass side panel and slide the panel in the direction indicated by the arrow.

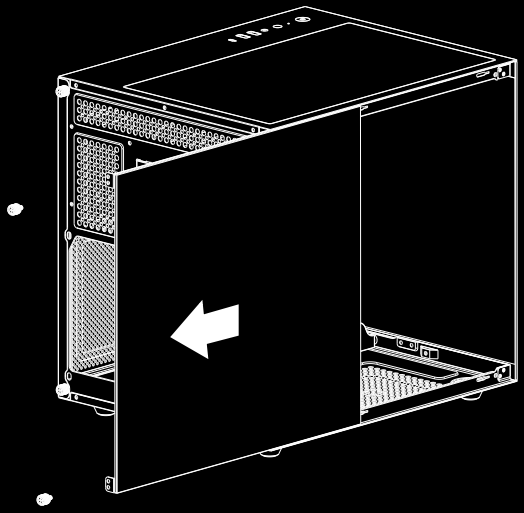

## Installing the Motherboard

Place the motherboard inside the case, align the mounting holes, and secure it with screws as shown in the figure.
**Note:** This case supports Micro-ATX and Mini-ITX motherboards. Installation requirements may vary depending on the motherboard. Refer to your motherboard's user manual for detailed instructions.

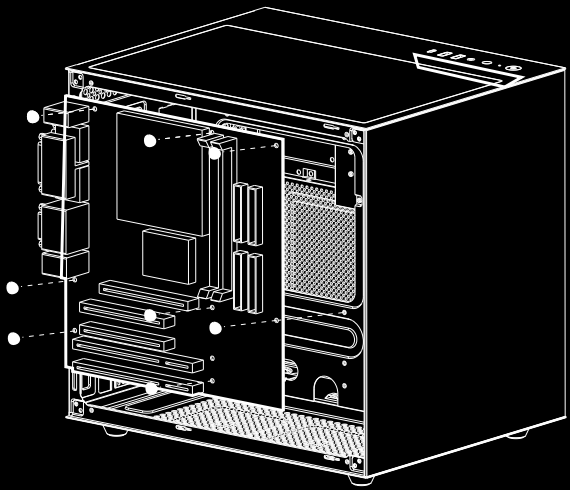

## Auxiliary Motherboard Mounting Plate

The auxiliary metal mounting plate is required when installing a 244 × 244 mm Micro-ATX motherboard. Position the plate as shown in the figure and secure it with 3 screws at the locations indicated in Figure (a).

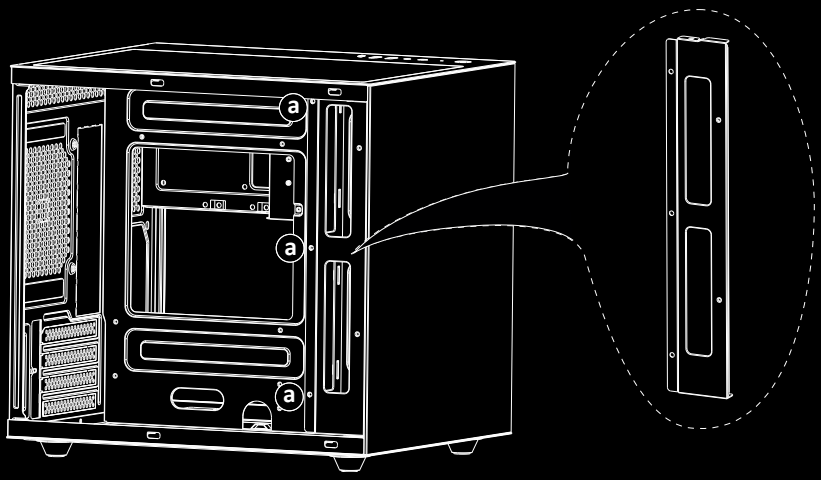


## Installing HDDs and SSDs

1. Remove the HDD/SSD mounting tray from the side of the case.
2. Secure one or two drives to the tray.
3. Reinstall the tray in the case and secure it with screws through the holes indicated in Figure (a).

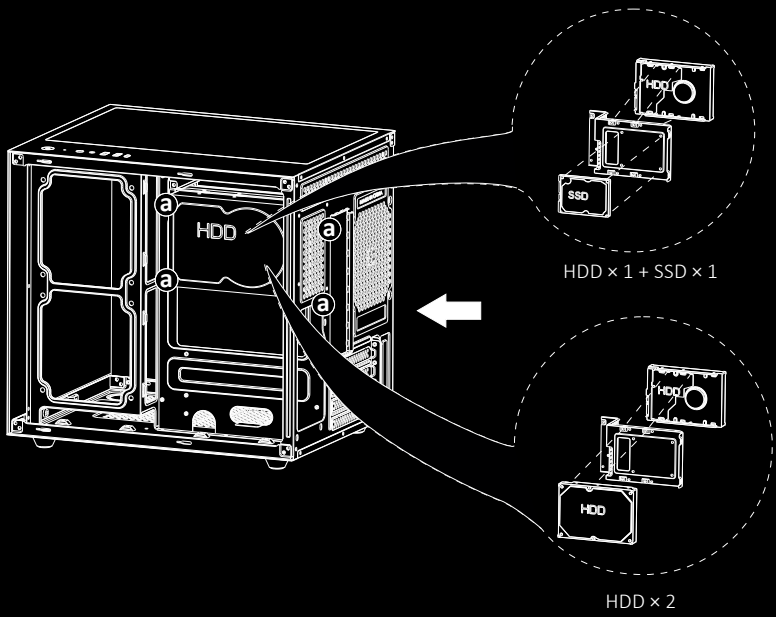

4. You can also install two SSDs on the bottom panel of the case. Position the SSDs inside the case and secure them with screws through the holes indicated in the figure.

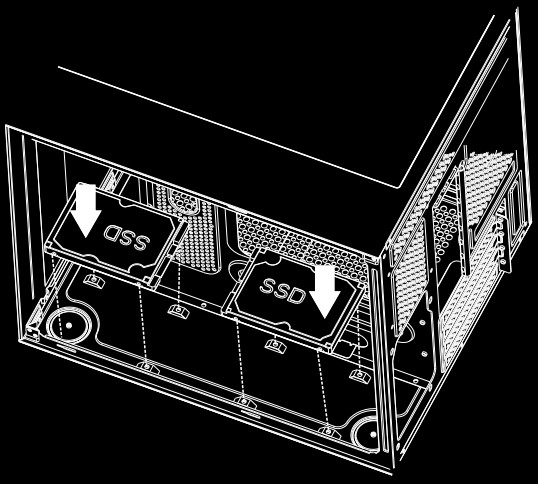


## Installing the Graphics Card

Unscrew and remove one or more PCI expansion slot covers, depending on the graphics card.
Insert the graphics card into the appropriate slot on the motherboard and secure it firmly with screws.

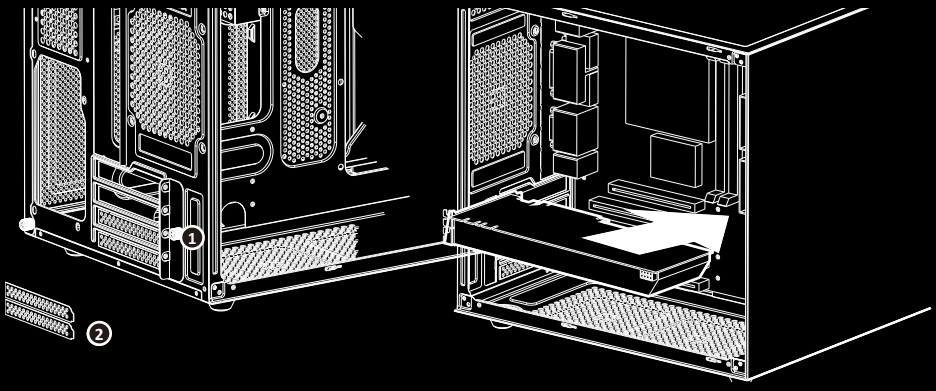

## Installing the Power Supply

Position the power supply as shown in Figure (a) and secure it with the power supply mounting screws on the rear panel of the case.

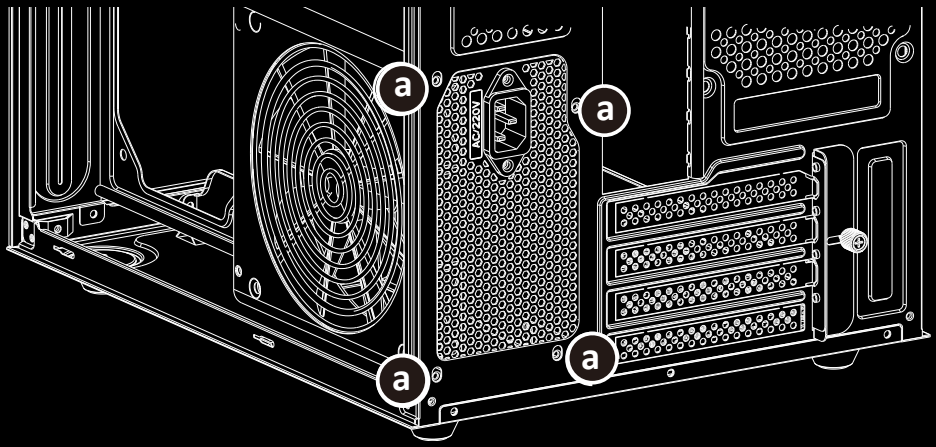


## Case Cooling System

- Top panel:
  - 2 × 120 mm fans; 1 × 240 mm radiator.
  - 2 × 140 mm fans; 1 × 280 mm radiator.
- Rear panel: 1 × 120 mm fan or 1 × 120 mm radiator.
- Bottom panel: 2 × 120 mm fans.
- Side panel (motherboard side): 2 × 120 mm fans.

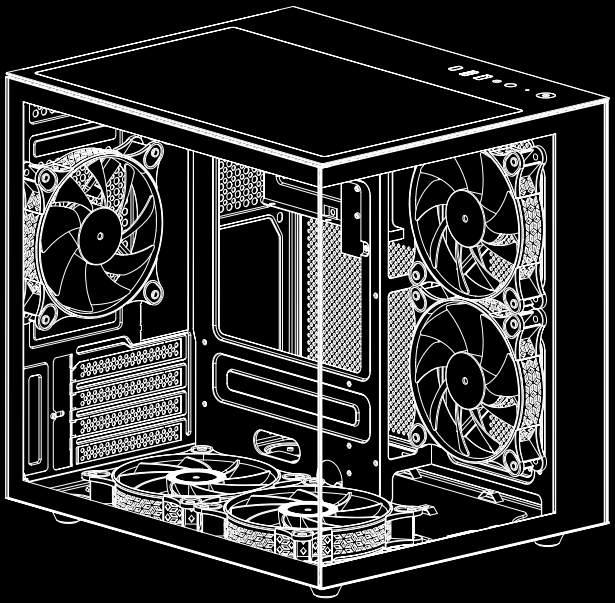

## Rules and Conditions for Installation, Storage, Transportation, Sale (Distribution), and Disposal

- The case does not require installation or permanent mounting.
- The case must be stored in its original packaging, on heated premises, both at the manufacturer's and at the consumer's sites. The ambient temperature should be between +5 °C and +40 °C, and the relative humidity should not exceed 80% (non-condensing). The storage area must be free from aggressive contaminants (e.g., acid or alkali vapors) that could cause corrosion.
- The case must be transported under dry conditions.
- The case requires careful handling. Protect it from exposure to dust, dirt, impact, moisture, fire, and other hazards.
- Sale or distribution of the case must be carried out in accordance with local legislation.
- At the end of the case's service life, it must not be disposed of with unsorted household waste. Instead, it must be taken to an authorized collection point for electrical and electronic equipment for subsequent recycling and disposal in accordance with federal or local legislation. By ensuring proper disposal of this product, you help conserve natural resources and prevent potential harm to the environment and human health that may result from improper handling. For more detailed information about collection and disposal points for this product, please contact your local municipal authorities or your household waste disposal service.
- If a case malfunction is detected, immediately contact an authorized service center or dispose of the product.

## Warranty Information

The manufacturer guarantees the product will function properly throughout the warranty period and be free from defects in materials and assembly. The warranty period commences on the date of purchase and applies only to new products. Warranty service includes free repair or replacement of defective parts that fail during the warranty period, provided the failure is not caused by consumer misuse and the product is operated in accordance with the user manual. Repairs or part replacements shall be performed at authorized service centers. Failure to follow the described safety precautions will void your warranty.

**Warranty Period:** 18 months
**Service Life:** 24 months

**For the up-to-date list of authorized service centers, please visit:** https://www.dns-shop.ru/service-center/

## Additional Information

**Manufacturer:** Guangzhou Tianbo Computer Equipment Co., Ltd.
No. 38 Chuangye Road, High-Tech Industrial Park, Conghua District, Guangzhou, Guangdong Province, China.

Made in China.

Product specifications, information and appearance are subject to change without prior notice, for quality improvement of our products.

Production date (mm.yyyy) _____v.1

LEARN MORE:
ARDOR-GAMING.COM
VK.COM/ARDOR_GAMING