NEUTRON V2

24.5" GAMING MONITOR

ARDOR GAMING

Contents

Intended Use 3
Safety Precautions 3
Specifications 4
Package Contents 4
Assembly and Placement 5
Device Diagram 7
Controls 8
Troubleshooting Guide 9
Cleaning and Maintenance 10
Rules and Conditions for Installation, Storage, Transportation, Sale (Distribution), and Disposal 10
Warranty Information 11
Additional Information 11

Monitor
ARDOR GAMING NEUTRON V2 24.5”
User Manual

Dear Customer,

Thank you for your trust!

Our team fully shares your passion for gaming, which is why we put every effort into making your experience with our gaming accessories unforgettable. We wish you many new victories and the brightest impressions ahead!

Intended Use

The monitor is designed to display information from a personal computer.

Safety Precautions

- Before connecting the device to a power source, make sure your home power supply matches the device’s electrical specifications.
- Always disconnect the device from the power supply when it is not in use and before cleaning, assembling, or disassembling it.
- Do not use accessories that are not recommended by the manufacturer.
- Place the device only on a flat, stable surface.
- Avoid using the monitor near devices that generate magnetic fields, such as electric motors, TVs, and other equipment.
- Do not place heavy objects on the video cable or power cord. Do not route cables through areas where they may be accidentally pulled or tripped over.
- Protect the power adapter cord from physical damage, such as pinching, cutting, twisting, and other mechanical stress.
- Do not touch the power adapter cord with wet hands.
- Choose a location for the monitor that minimizes reflections and glare on the screen.
- To prevent electric shock, do not disassemble the device yourself. The device contains no user-serviceable parts. Maintenance and repairs must only be performed by qualified personnel at an authorized service center.
- Do not block the device’s ventilation openings or allow foreign objects to enter its housing.
- Protect the device from moisture, dust, and extreme temperatures to prevent damage.
- Do not use the device if it has been dropped or if the cable or device shows visible signs of damage. Contact an authorized service center.
- If the device malfunctions, stop using it immediately and contact an authorized service center.
- The device is not intended for use by children or persons with reduced physical, sensory, or mental capabilities unless they are supervised by a person responsible for their safety. Do not allow children to play with the device.
- The device is not intended for commercial use.

Specifications

- Model: AF25H1 V2
- Trademark: ARDOR GAMING
- Power adapter specifications
  - Input: 100–240 V ~ 50–60 Hz
  - Output: 12 V ⎓ 5 A
- Device power supply: 12 V ⎓ 5 A
- Power consumption: 60 W
- Sleep mode power consumption: 0.5 W
- Screen diagonal: 24.5″
- Maximum screen refresh rate: 360 Hz
- Maximum supported resolution: 1920 × 1080
- Panel technology: IPS
- Brightness: 400 cd/m²
- Contrast ratio: 1000:1
- Maximum number of colors: 16.7 million
- Vertical/horizontal viewing angle: 178°
- Pixel response time (GtG): 2 ms
- Pixel response time (MPRT): 1 ms
- Low Blue Light technology
- Flicker-Free technology
- Panel backlight type: LED
- Aspect ratio: 16:9
- Connectors: DisplayPort × 2, HDMI × 2, AUDIO OUT, USB Type-A
- Speaker power: 2 × 2 W
- Pixel density: 89.9 PPI
- Pixel pitch: 283 µm
- Power adapter protection class: II
- Device protection class: III
- IP code: IP20
- RGB lighting
- VESA mounting pattern: 100 × 100 mm
- Power cord attachment type: X
- Scope of application: Domestic

Package Contents

- Monitor
- Stand
- HDMI cable
- DP cable
- Power adapter
- Screwdriver
- Screws
- Screen cleaning cloth
- User manual

Assembly and Placement

Assembling and Installing the Monitor Stand

1. Remove the monitor from its packaging and place it face down on a flat, soft, stable surface.
2. Align the four VESA mounting holes on the stand arm with the threaded holes on the rear panel of the monitor. Evenly tighten the four M4 × 12 mm screws to secure the stand arm to the monitor.
3. Align the stand base with the bottom of the stand arm and secure it using three M4 × 16 mm screws.

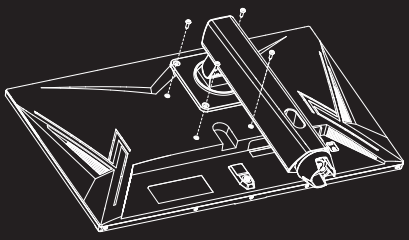

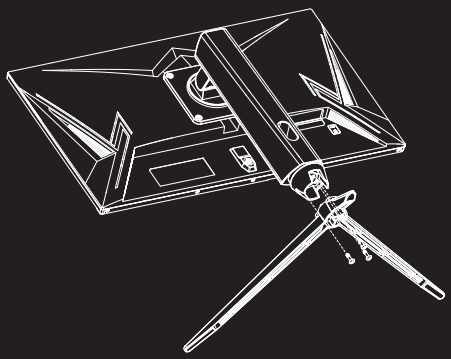

Removing the Monitor Stand

1. Place the monitor face down on a flat, soft, stable surface.
2. While holding the stand arm, unscrew the three M4 × 16 mm screws connecting the stand base to the bottom of the arm. Remove the stand base.
3. Loosen and remove the four M4 × 12 mm VESA mounting screws to detach the stand arm from the monitor, then carefully remove the arm.

Monitor Placement

Do not install the monitor in poorly ventilated areas. Ensure adequate air circulation around the device, as shown in the figure below.

CAUTION! The images are provided for reference only and may differ slightly from the actual device.

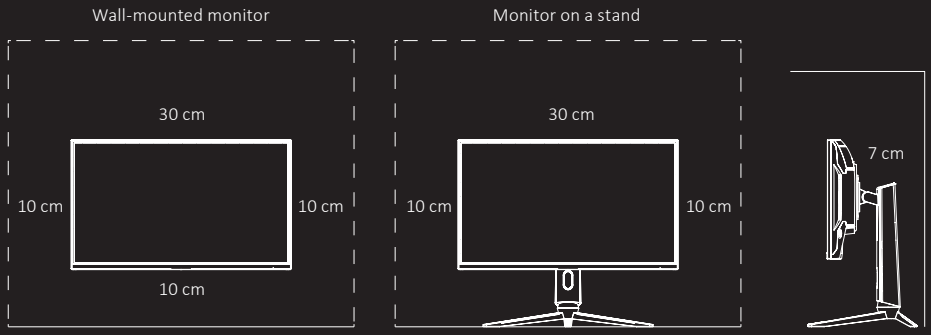



Obstruction to airflow

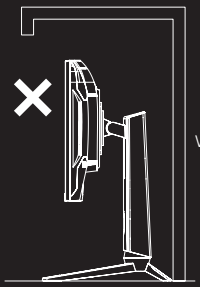

Obstruction to airflow

Adjusting the Screen Position

The monitor allows you to adjust the screen position for maximum comfort during use.

Height adjustment range: 90 ± 1 mm

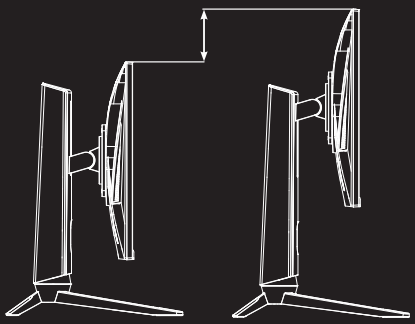

Swivel left/right: 20 ± 3°

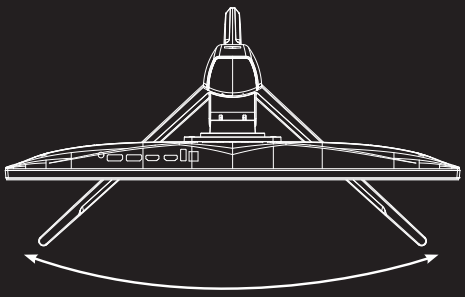

Forward tilt: 5 ± 3°

Backward tilt: -20 ± 3°

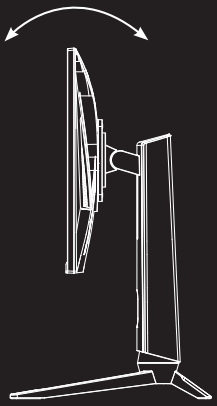

Pivot between landscape and portrait orientations

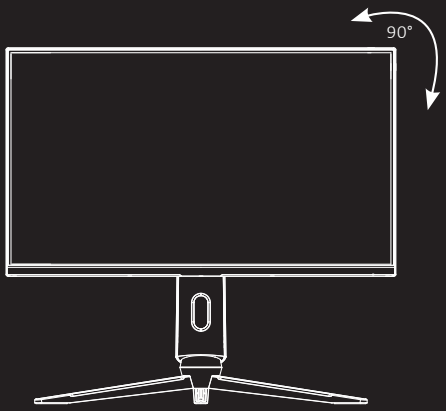

CAUTION! Be careful when tilting the monitor. Do not apply excessive force.

Connecting the Monitor

- Make sure both the monitor and the PC are turned off and disconnected from the power supply.
- Connect the HDMI/DP cable to the corresponding port on the monitor and connect the other end to the appropriate port on your computer's graphics card.
- Connect the power adapter's DC plug to the monitor's DC power input. Connect the adapter to a grounded power outlet using the power cord.
- Make sure the power cord and cables are properly connected. Turn on the PC.
- Set the appropriate screen resolution and refresh rate in the Windows display settings.

Device Diagram

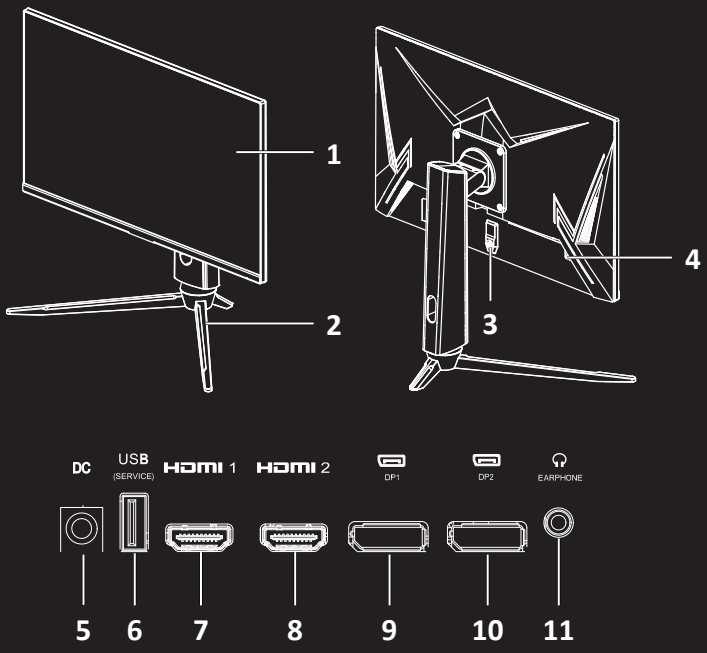

1. Screen
2. Stand
3. Joystick / control button
4. Kensington security lock slot
5. Power input
6. USB Type-A port (for servicing)
7. HDMI 1 port
8. HDMI 2 port
9. DisplayPort 1 (DP1)
10. DisplayPort 2 (DP2)
11. Headphone jack

Controls

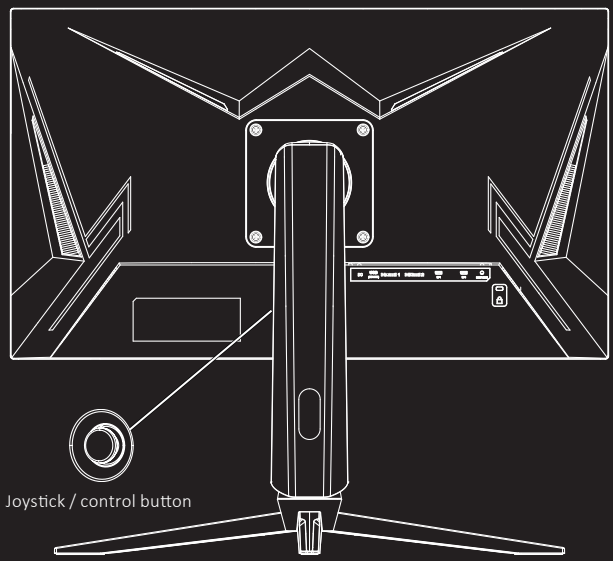

- **Center button**
  - Short press (when the OSD menu is closed): Turn on the monitor / open the OSD menu.
  - Short press (when the OSD menu is open): Exit the OSD menu.
  - Long press: Turn off the monitor.
- **Joystick up**
  - Select the input source.
  - In the OSD menu: Move up through the menu items or increase the selected setting.
- **Joystick down**
  - Switch to KVM mode.
  - In the OSD menu: Move down through the menu items or decrease the selected setting.
- **Joystick right**
  - Open the mode settings menu.
  - In the OSD menu: Confirm the selection.
- **Joystick left**
  - Open the Gaming Assistant.
  - In the OSD menu: Return to the previous menu level.

CAUTION! If the computer's video signal exceeds the monitor's supported frequency range, the synchronization signals will automatically be disabled to protect the display. To restore normal operation, adjust the computer's video output frequency to a value within the supported range.

Troubleshooting Guide

Issue	Possible cause	Solution
The power indicator is off	The monitor is not connected to the power supply or is turned off	Check the monitor's power connection and make sure it is turned on
No image on the screen	The signal cable is disconnected or connected incorrectly	Make sure the cables are securely connected
	The wrong input source is selected	Change the input source using the OSD menu
The image is blurry, displayed incorrectly, or not fully visible	Incorrect screen refresh rate	Adjust the refresh rate
	The cable is damaged or of poor quality	Replace the cable
	Incorrect screen resolution	Set the appropriate resolution
	The monitor cannot detect the signal	Use the auto-adjustment function in the OSD menu
The image is too dark	Low brightness and contrast settings	Adjust the brightness and contrast using the OSD menu
Incorrect colors	The monitor port or video cable connector is damaged, or the cable is not fully inserted	Connect the cable properly. Replace it if necessary
	Incorrect color settings	Adjust the color settings using the OSD menu or restore the default settings
Dark or bright spots appear on the screen when the monitor is turned on	Normal variation caused by uneven warm-up of the backlight	Wait for the backlight to warm up. The spots should disappear
Image distortion, flickering, or shaking	Incorrect screen resolution or refresh rate	Adjust the screen resolution and refresh rate
The monitor does not recognize a connected device	The port is damaged	Try another port. If the problem persists, contact an authorized service center
	The device is incompatible with the monitor	Make sure the device supports the monitor's connection interfaces
Lines appear on the screen or the image is distorted	The signal cable is damaged or connected incorrectly	Make sure the cable is securely connected or replace it
	The graphics card is faulty	Check that the graphics card is working properly
	Driver issues	Update or reinstall the drivers

Cleaning and Maintenance

- Protect the device from direct sunlight.
- Install the monitor in a well-ventilated area.
- Do not place heavy objects on top of the monitor.
- Install the monitor in a dry, dust-free location.
- Do not place the device near sources of magnetic fields, such as audio systems, TVs, or other equipment.

CAUTION!

- If the monitor produces unusual sounds or odors, immediately disconnect it from the power supply and contact an authorized service center.
- Do not remove the monitor's cover or rear panel. Doing so may cause electric shock or fire. The internal components are not user-serviceable. Maintenance and repairs must only be performed by qualified personnel at an authorized service center.

Rules and Conditions for Installation, Storage, Transportation, Sale (Distribution), and Disposal

- The installation and mounting conditions for the device are described in the «Assembly and Placement» section of this user manual.
- The device must be stored in its original packaging, on heated premises, both at the manufacturer's and at the consumer's sites. The ambient temperature should be between +5 °C and +40 °C, and the relative humidity should not exceed 80% (non-condensing). The storage area must be free from aggressive contaminants (e.g., acid or alkali vapors) that could cause corrosion.
- The device must be transported under dry conditions.
- The device requires careful handling. Protect it from exposure to dust, dirt, impact, moisture, fire, and other hazards.
- Sale or distribution of the device must be carried out in accordance with local legislation.
- Upon expiration of the device's service life, it must not be disposed of with unsorted household waste. Instead, it must be taken to an authorized collection point for electrical and electronic equipment for subsequent recycling and disposal in accordance with federal or local legislation. By ensuring proper disposal of this product, you help conserve natural resources and prevent potential harm to the environment and human health that may result from improper handling. For more detailed information about collection and disposal points for this product, please contact your local municipal authorities or your household waste disposal service.
- If a device malfunction is detected, immediately contact an authorized service center or dispose of the device.

Warranty Information

The manufacturer guarantees the device will function properly throughout the warranty period and be free from defects in materials and assembly. The warranty period commences on the date of purchase and applies to new products only. Warranty service includes free repair or replacement of defective parts that fail during the warranty period, provided the failure is not caused by consumer misuse and the product is operated in accordance with the user manual. Repairs or part replacements shall be performed at authorized service centers.

Warranty Period: 36 months

Service Life: 48 months

For the up-to-date list of authorized service centers, please visit: https://www.dns-shop.ru/service-center/

Additional Information

Manufacturer: HONG KONG OVERVIEW INDUSTRY CO., LIMITED.
ROOM 20 UNIT B3, 07/FL TUEN MUN INDUSTRIAL CENTRE, NO. 2 SAN PING CIRCUIT, TUEN MUN, HONG KONG.

Made in China.

The product meets the requirements of the technical regulations of the TR CU (EAEU).

Product specifications, information and appearance are subject to change without prior notice, for quality improvement of our products.

Production date (mm.yyyy):_____ V.1

LEARN MORE:
ARDOR-GAMING.COM
VK.COM/ARDOR_GAMING