AZZA

ATX 3.0

PCI-e Ready 5.0

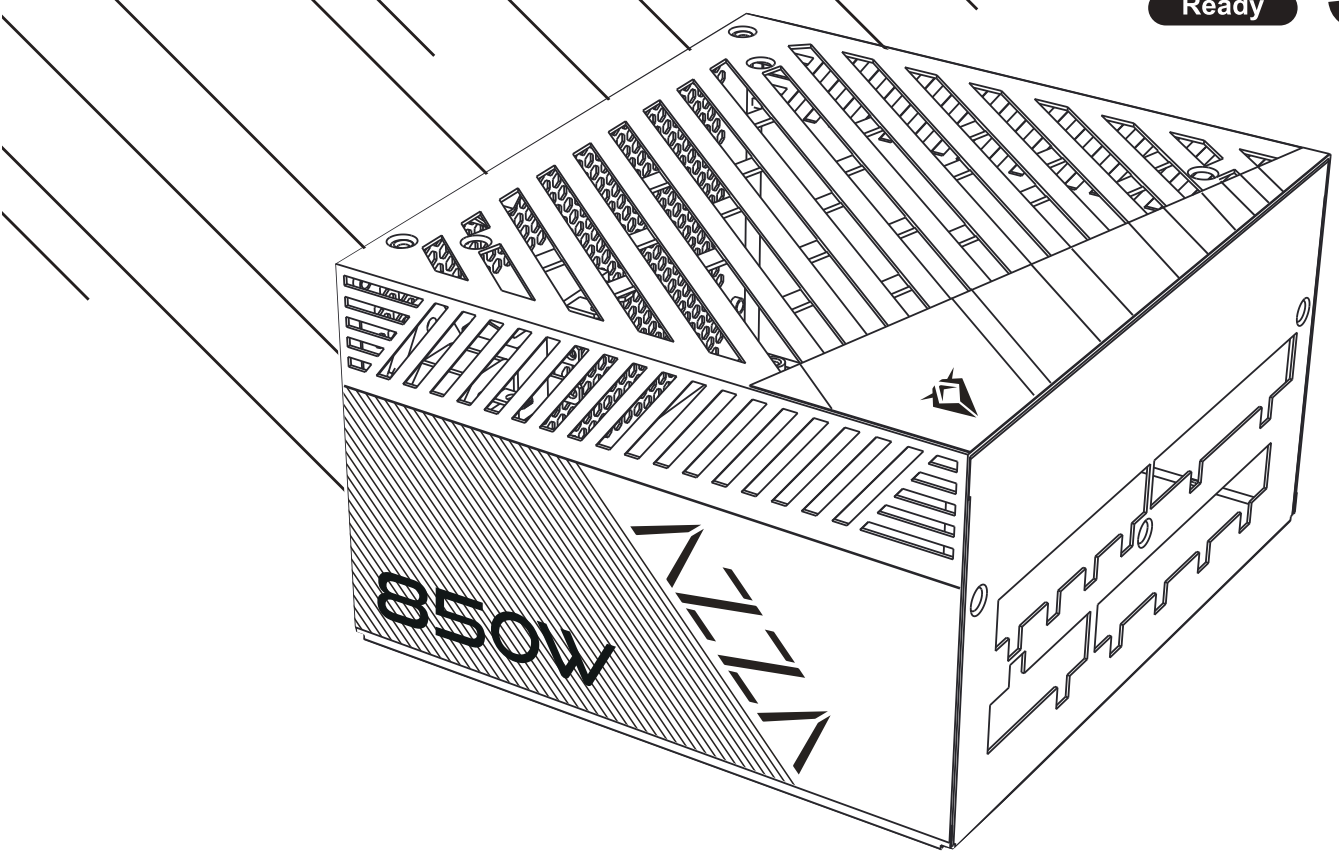

PSAZ-850G

POWER SUPPLY

850W

80 PLUS GOLD

USER MANUAL

Features

- Complies with ATX12V V3.0
- Efficiency ≧ 90% typical load
- Eco semi-fanless fan control switch
- 120mm Smart Fluid Dynamic Bearing Fan
- LLC Full Bridge Topology with DC-DC module design
- Japanese electrolytic capacitors
- Support PCIe Gen 5.0 graphics card
- High-quality native 16-pin cable supports 600W output
- Complete protection: OCP/OVP/OPP/SCP/OTP/UVP
- 80 PLUS® Gold certified
- Fully modular design

Specifications

PSAZ-850G	850W GOLD				
AC Input	100-240Vac 50-60Hz 10A Max				
DC Ouput Voltage	+12V	+5V	+3.3V	-12V	+5Vsb
Max Ouput Current	70.8A	20A	20A	0.3A	2.5A
Combined Power	840W	120W		3.6W	12.5W
Total Power	850W				

Dimensions

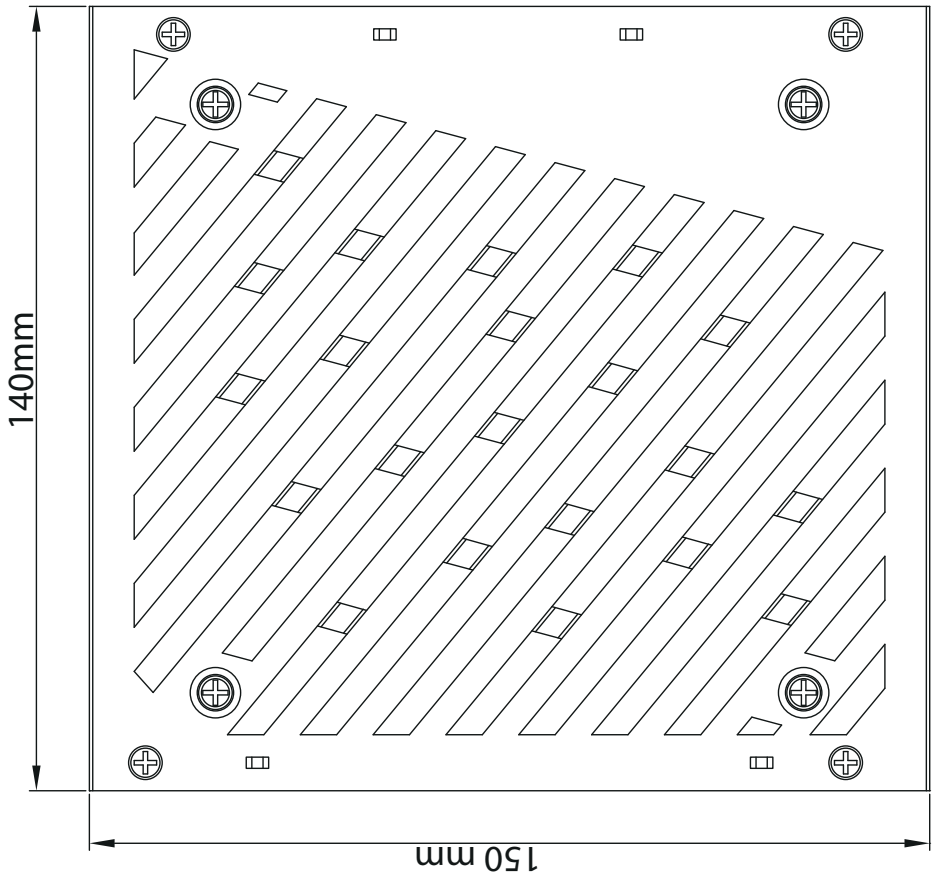

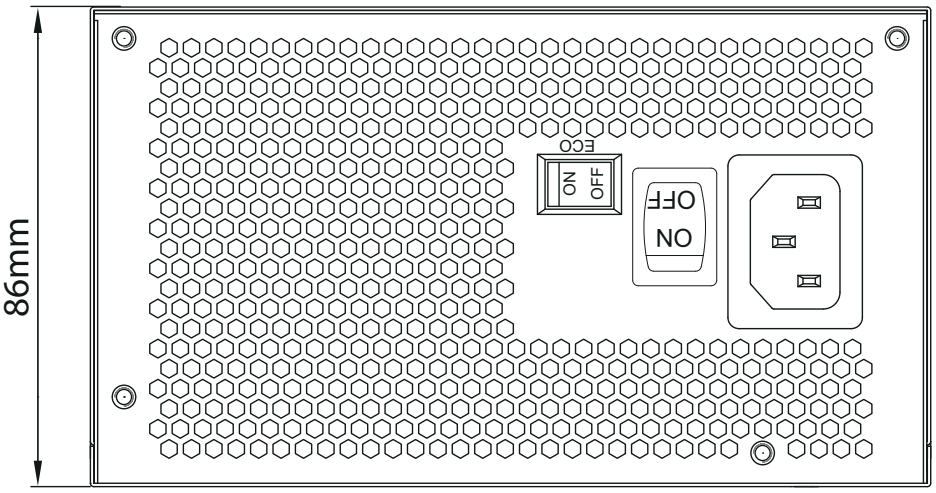

Eco Thermal Control System

The AZZA ECO Intelligent Thermal Control System provides silent operation at low loads, improved efficiency and longer life span of the fan. Enabled by a simple switch directly on the power supply, the “No Fan Spin” feature is ideal for users looking to reduce ambient noise overall. Save on energy costs and unnecessary fan usage with the AZZA ECO Thermal Control System.

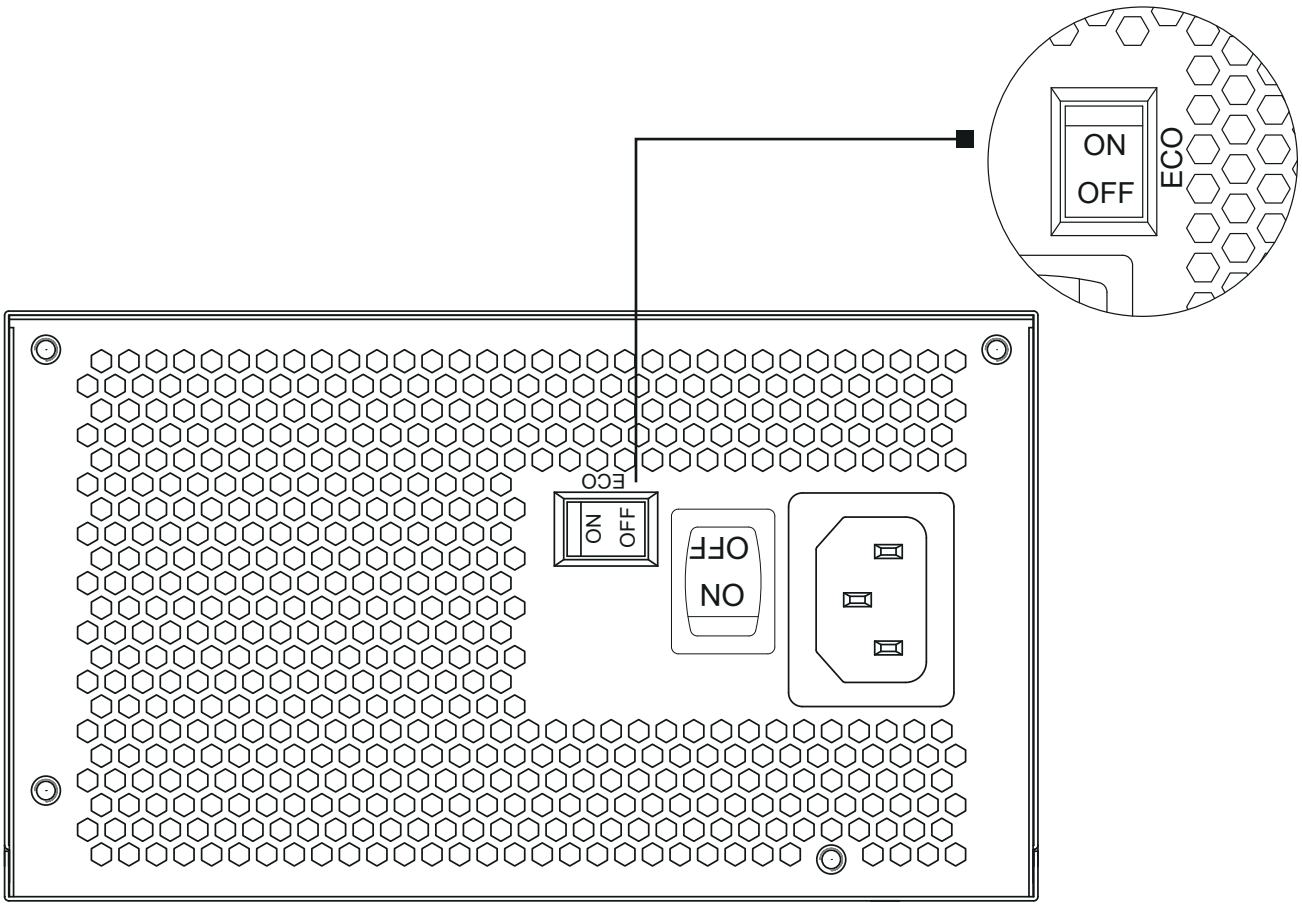

Detachable Connectors

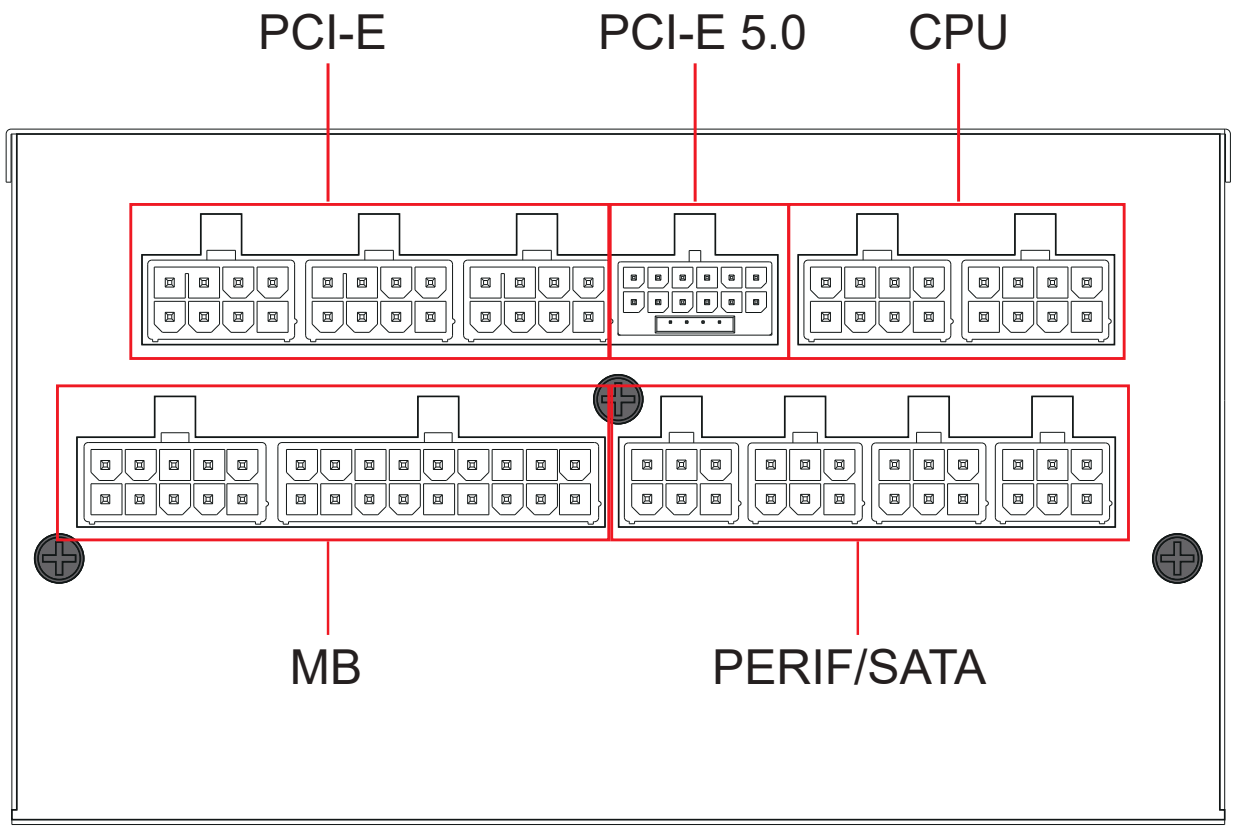

Connectors

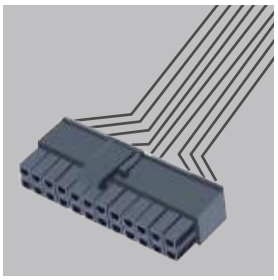

ATX 24 x1

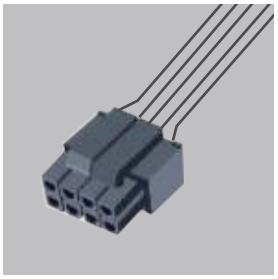

4+4Pin x2



PCIe 12+4 x1



PCIe 6+2 x4



Sata x9



Molex(PERIPHERAL) x4

Connectivity and Cable Lengths

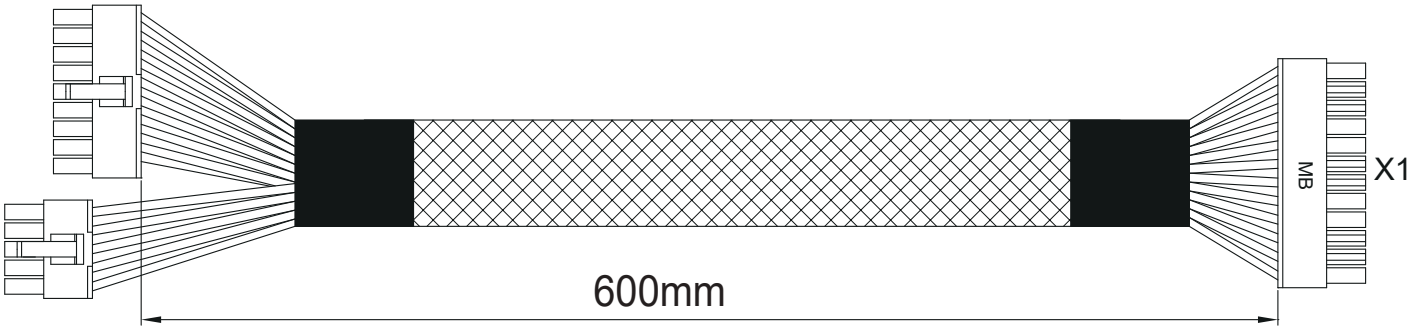

ATX /MB 24 Pin 600mm

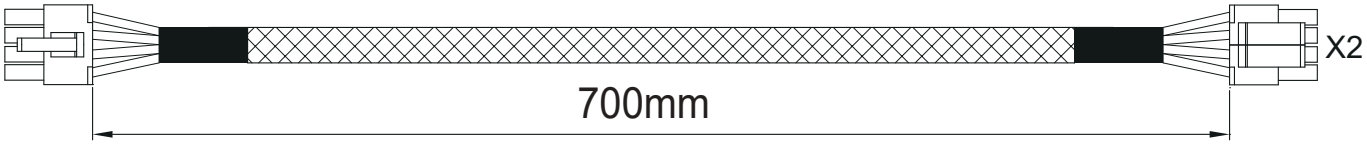

CPU/EPS(4+4 Pin) 700mm

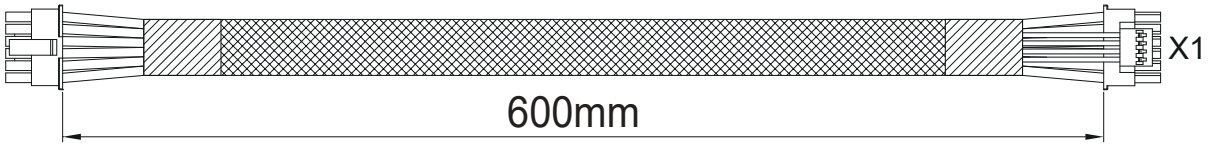

PCIE5.0 16Pin 600mm

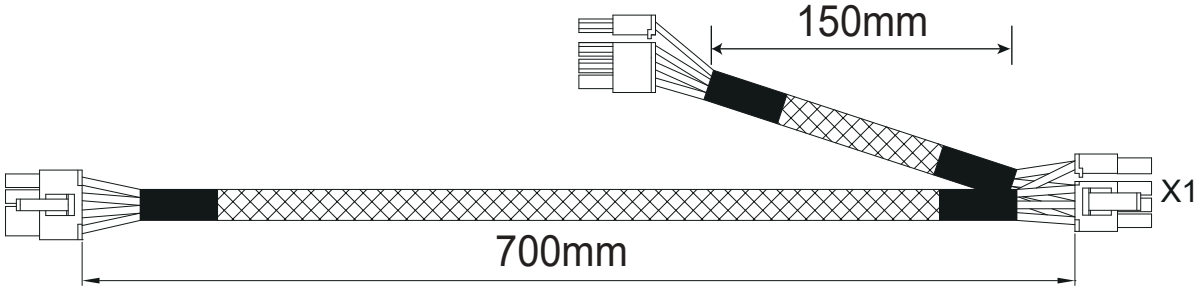

PCI6+2P/PCI6+2P 700/150mm

Connectivity and Cable Lengths

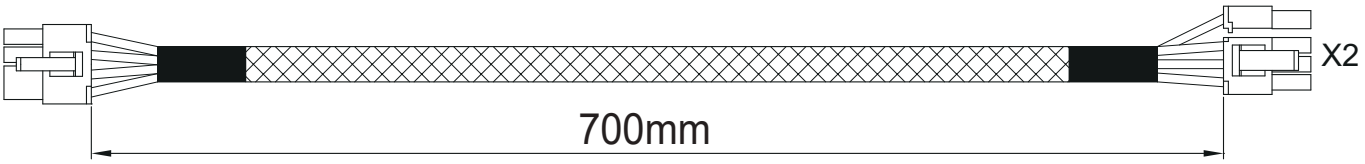

PCI6+2P 700mm

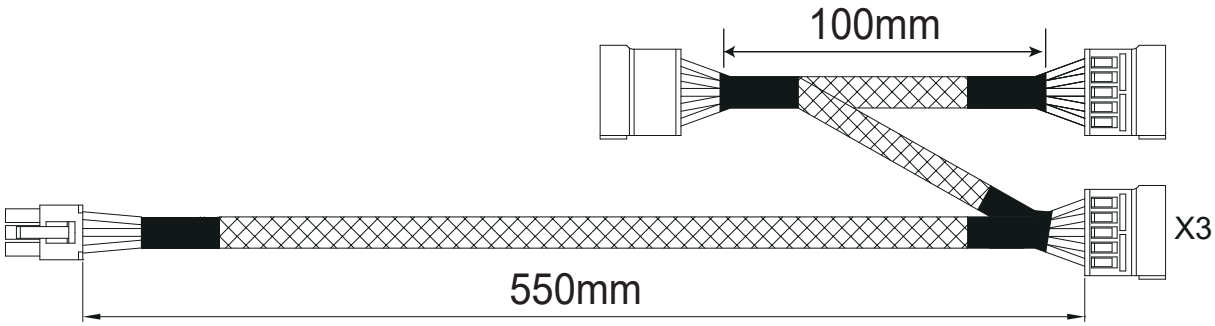

SATA 550/100/100mm

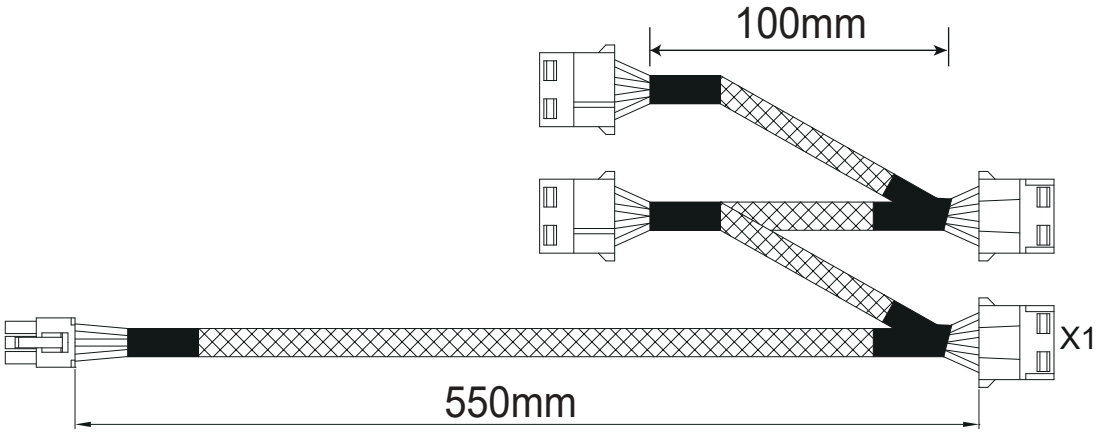

Molex 550/100/100/100mm

12VHPWR Cable Guide

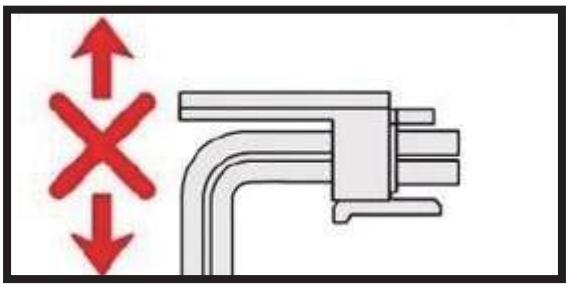

Do not bend vertically

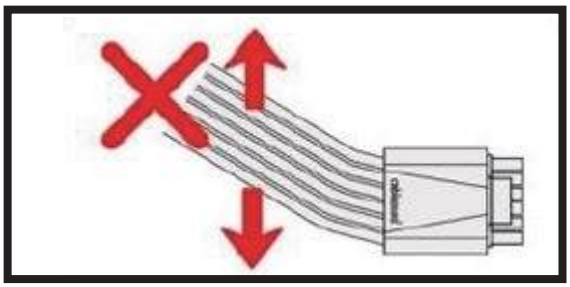

Do not bend horizontally

The 12VHPWR connector and the terminals used in it are much smaller than the previous generation.
Through our extensive testing, it appears that bending the wires too close to the connector could result in some of the terminals coming loose or misaligning within the connector itself.
This may lead to an uneven load across the other wires, increasing the risk of overheating damage.
The risk of this is substantially higher if the bend is done horizontally in relation to the connector orientation (left to right).



Leave enough 12VHPWR cable length (around 35mm), then do cable management.
The connectors should click to lock in.

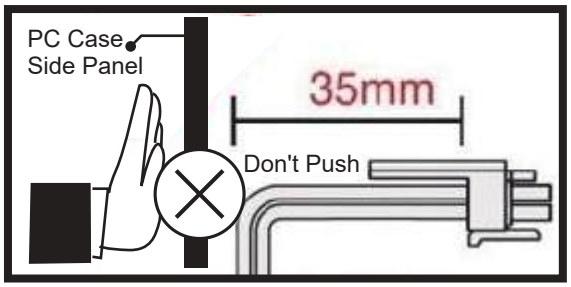

Bend starting at 35mm from connector

RTX 40 Series is bigger than the rest of the models therefore make sure that the width of the case is wide enough for the PSU and RTX40 Series GPU.
Once complete install the system, please DO NOT PUSH THE SIDE PANEL otherwise the cable will be squeezed and there will be the risk of OVERHEATING & BURNING.