GAMDIAS

HELIOS | P2A 1300G

90% Efficiency Power Supply

▼ Package Contents

A.

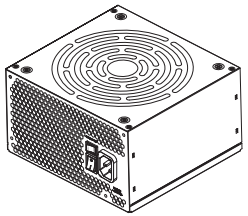

x1

B.



x4

C.

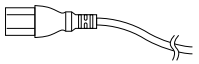

AC Power cord x1

D.

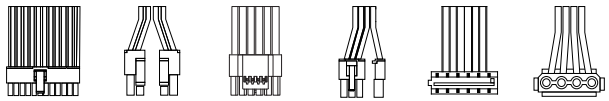

Motherboard Connector 24-pin	CPU EPS 4+4-pin	GPU 12V-2x6 12+4-pin	GPU PCI-E 6+2-pin	SATA 5-pin	Molex 4-pin
x1	x2	x1	x6	x12	x4

▼ Output Specification

Model Name	HELIOS P2A-1300G				
AC Input	100-240V~ ,15-8A,50-60Hz				
DC Output	+3.3V	+5V	+12V	-12V	+5Vsb
Max. Output Current	22A	22A	108.3A	0.3A	3A
Max. Output Power	120W		1300W	3.6W	15W
Total Power	1300W				

Silent Mode

ON: The fan remains stationary when the system load is below 20%. It activates automatically when the load exceeds 20%

OFF: The fan operates continuously from the moment the power supply is powered on



Fully Modular

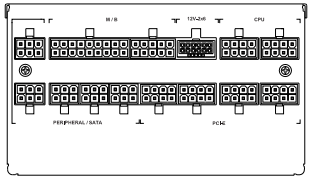

▼ Installing

02

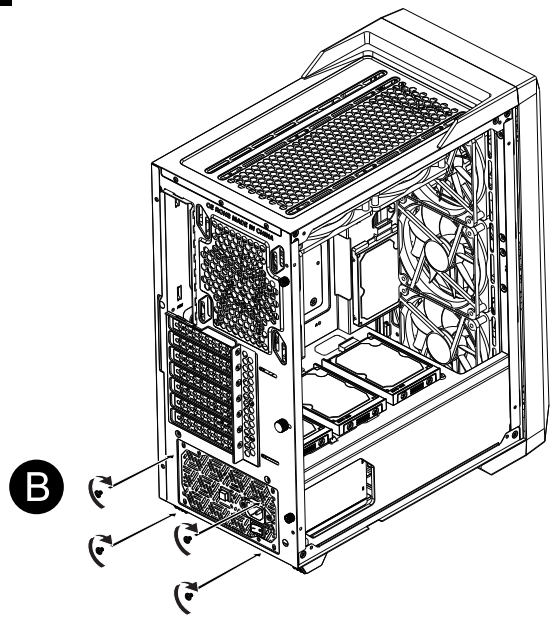

▼ Warnings and Caution

Do not place the power supply in high humidity and /or temperature environment.

High voltages exist in the power supply. Do not open the power supply case unless you are an authorized service technician or electrician. Doing so will void the warranty.

Make sure all cables are plugged in properly. Loose and improper connections would damage the power supply and your system.

▼ Turn off

01

Turn off the PSU before installing by pushing I/O switch to “O" position.

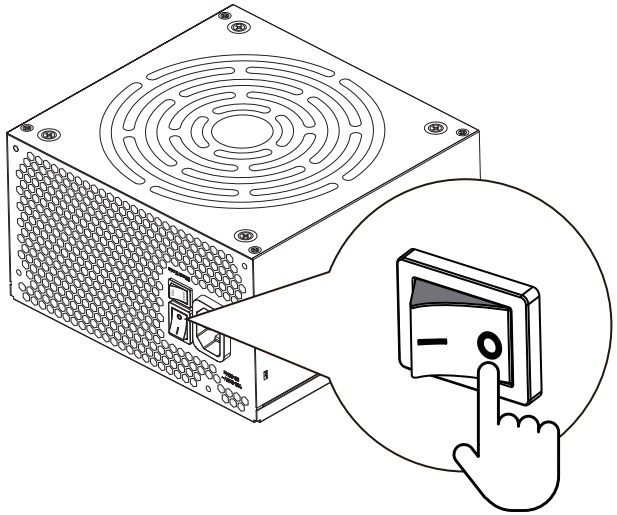

▼ Motherboard

03

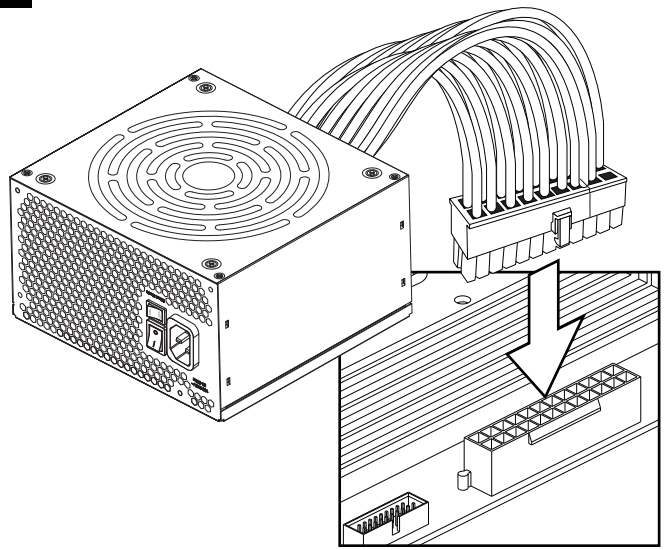

▼CPU

04

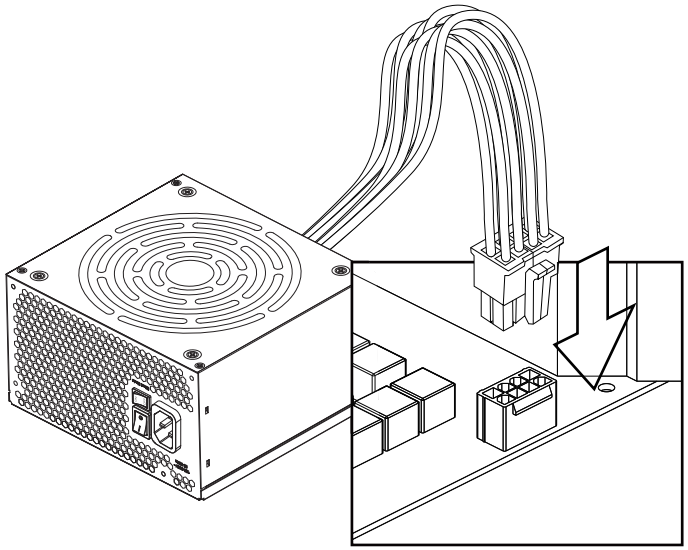

▼PCIE

05

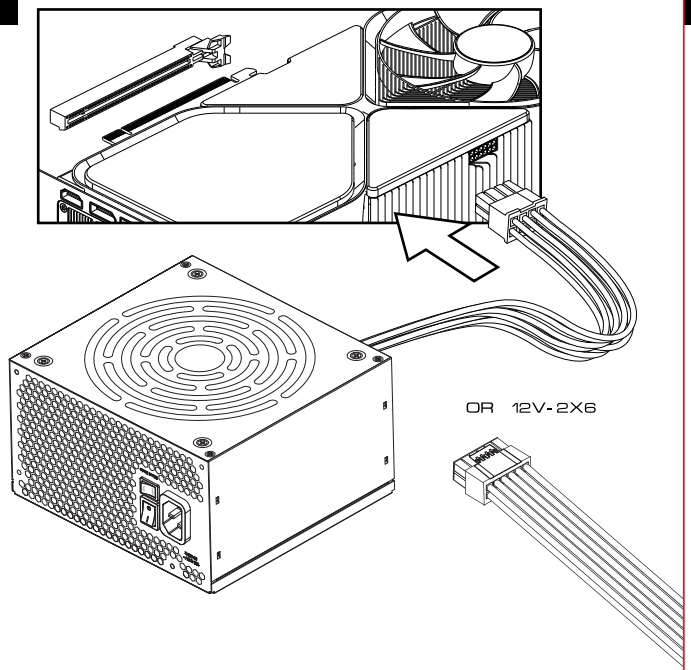

▼SATA

06

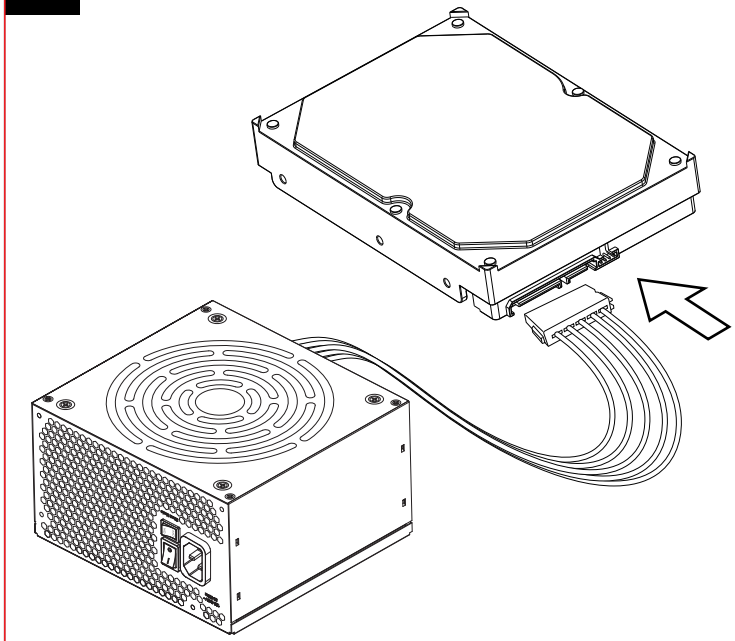

▼Molex

07

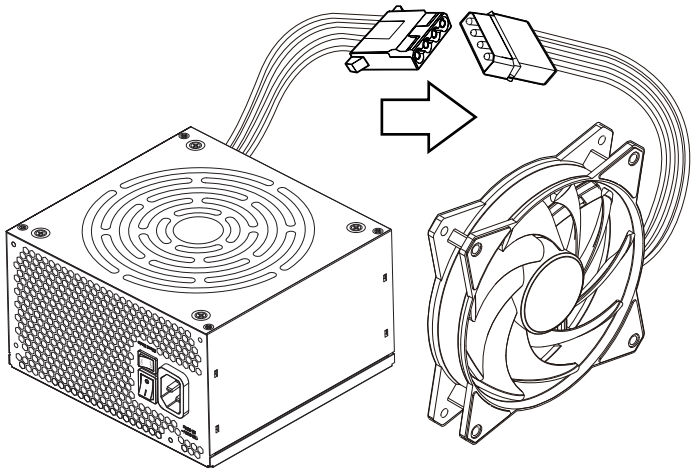

▼Start up

08

Plug in the AC power cord.

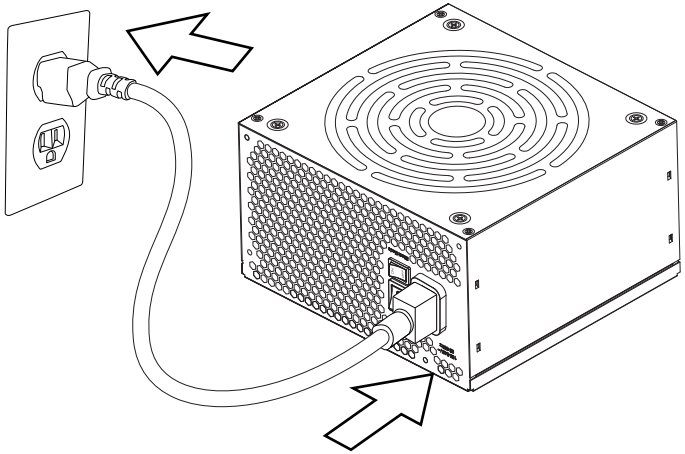

▼Power switch

09

Turn on the PSU after installing by pushing I/O switch to "I" position.

