User Manual

Hair Dryer Brush
DHB-877

DEXP

Contents

Intended use **3**

Safety precautions **3**

Specifications **4**

Package Contents **4**

Device Diagram **5**

Operating Instructions **6**
Attaching and Removing Nozzles 6
Operation 6

Cleaning and Maintenance **7**

Rules and Conditions for Installation, Storage, Transportation, Sale (Distribution), and Disposal **7**

Warranty Information **8**

Additonal Information **8**

Dear Customer,

Thank you for choosing our products.
We are pleased to offer you appliances and devices designed and manufactured to the highest standards of quality, functionality, and design. Before using the device, please read this manual carefully. It contains important information regarding your safety, as well as recommendations for the proper use and care of the product. Please keep this manual in a safe place and use it as a reference guide during future operation of the product.

Intended use

Hair Dryer Brush — a device designed for drying and styling hair in domestic environments.

Safety precautions

- Before connecting the device to the power source, ensure that the voltage of your household electrical network matches its technical specifications. Plug the device only into a grounded outlet.
- Do not use the device in bathrooms, showers, near swimming pools, or in close proximity to water. Never place the device under running water or immerse it in water. Do not touch the device with wet hands.
- Do not use the device outdoors.
- Do not use the device near flammable gases, liquids, or materials. Do not use aerosol sprays while operating the device.
- Never leave the device unattended while in use.
- Immediately unplug the device if it malfunctions. Do not use the device if the power cord, plug, or other parts are damaged.
- Do not disassemble the device yourself to avoid electric shock. Maintenance and repairs should only be performed by qualified technicians at an authorized service center.
- Do not place the device or cord near hot surfaces to avoid damage.
- Do not bend or wrap the cord around the device.
- Use only the accessories supplied with the device.
- Place the device only on heat-resistant, stable, and flat surfaces. Ensure that the hot parts do not come into contact with any flammable materials.
- Be cautious when handling the device, as some parts may become extremely hot during operation. Hold the device only by the handle and avoid contact of hot parts with skin.
- Never cover the appliance (e.g., with a towel or clothing) while it is hot.
- Never insert foreign objects into the air inlet or outlet vents. Clean them regularly to prevent clogging.
- Ensure that hair does not enter the air inlet vents.
- This device is not intended for use by persons (including children) with reduced physical, sensory or mental capabilities, or lack of experience and knowledge, unless they have been given supervision or instruction concerning use of appliance by a person responsible for their safety. Children should be supervised to ensure that they do not play with the device.
- This device is not intended for commercial use.

Specifications

- Model: DHB-877.
- Trademark: DEXP.
- Power supply: 220–240 V ~ 50–60 Hz.
- Power: 1200–1500 W.
- Motor: BLDC.
- Number of heat settings: 3.
- Number of speed settings: 3.
- Number of nozzles: 8.
- Ionization function: Ion generator.
- Overheat protection: yes.
- Power cord length: 2.5 m.
- Protection class: II.
- Cord type: Y.
- IP code: IPX0.
- Scope of application: domestic.

Package Contents

- Device.
- Nozzles (8 pcs).
- Glove.
- Filter cleaning brush.
- Hair clips (2 pcs).
- Storage bag.
- User Manual.

Device Diagram

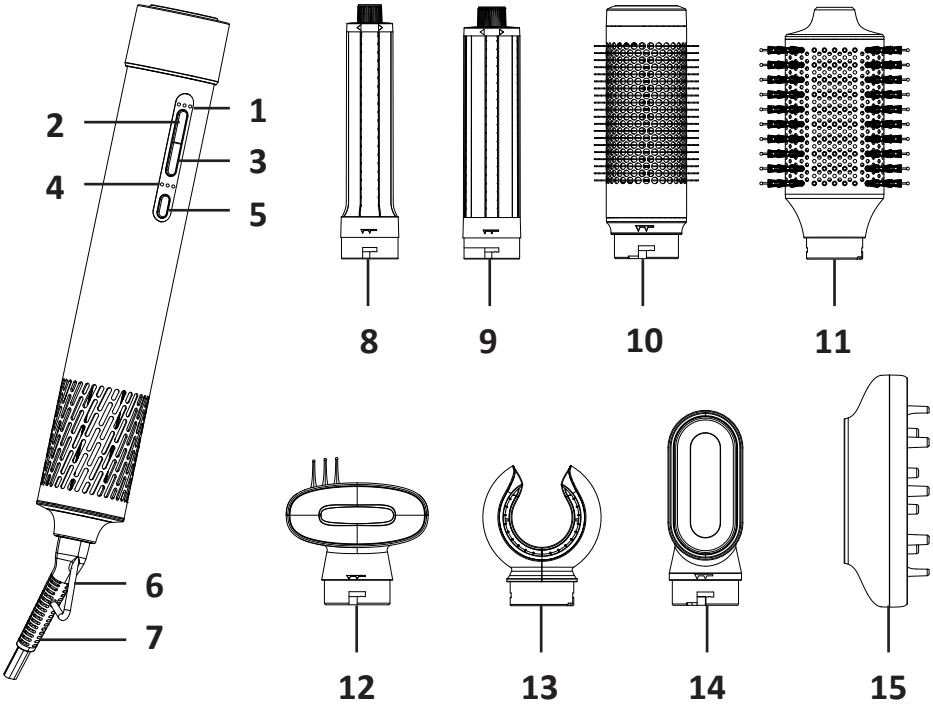

1. Temperature indicators.
2. Temperature selection button.
3. Air speed selection button.
4. Air speed indicators.
5. Power button.
6. Hanging loop.
7. Swivel cord.
8. Curling nozzle with airflow direction switch (32 mm).
9. Curling nozzle with airflow direction switch (40 mm).
10. Round brush nozzle (50 mm).
11. Round brush nozzle (70 mm).
12. Smoothing Brush (nozzle).
13. Straightening (nozzle)*.
14. Concentrator (nozzle).
15. Diffuser (nozzle).

* Place a section of hair into the groove of the nozzle.

Operating Instructions

Attaching and Removing Nozzles

1. Insert the selected nozzle into the socket by aligning the nozzle lock button «🔓» with the first arrow on the nozzle base «▼▼». Then, turn the nozzle clockwise until it clicks, so that the second arrow on the nozzle aligns with the lock «🔓».
2. To remove the nozzle, first press and hold the nozzle lock button. Then, turn the nozzle counterclockwise and pull it towards you.

Operation

1. Connect the device to the power source.
2. Attach the desired nozzle (see the «Attaching and Removing Nozzles» section).
3. To turn on the device, press and hold the power button for half a second. The default settings are low air speed and low temperature.
4. To adjust the air speed, press the «🌀» button. The corresponding indicators will light up in blue: «●» — low speed, «● ●» — medium speed, «● ● ●» — high speed. The speed setting cycles.
5. To adjust the air temperature, press the «🌡» button. The corresponding indicators will light up in red: «●» — low temperature, «● ●» — medium temperature, «● ● ●» — high temperature. The temperature setting cycles.
6. To turn off the device, press and hold the power button for half a second. The device remembers the last settings and will use them the next time it is turned on.

Cleaning and Maintenance

- Before cleaning, unplug the device from the power source and allow it to cool down.
- Remove all hair from the nozzle.
- To clean the exterior, use a soft, slightly damp cloth. Do not use harsh or abrasive cleaners.
- Ensure that the air inlet vents are not blocked by dust or hair.

Self-Cleaning

1. Connect the device to a power source.
2. Press and hold the power button for half a second.
3. Turn off the device.
4. Within 3 seconds of turning off the device, press and hold the air speed button «✣» for 3 seconds. The device will start self-cleaning, and the air speed indicators «●●●» will flash blue.
5. The motor speed will gradually increase from low to high, then decrease from high to low. This process takes approximately 20 seconds.

Rules and Conditions for Installation, Storage, Transportation, Sale (Distribution), and Disposal

- This device requires no assembly or mounting.
- The device must be stored in its original packaging, on heated premises, both at the manufacturer's and at the consumer's sites. The ambient temperature should be between +5 °C and +40 °C, and the relative humidity should not exceed 80% (non-condensing). The storage area must be free from aggressive contaminants (e.g., acid or alkali vapors) that could cause corrosion.
- The device must be transported in a dry place.
- The device requires careful handling. Protect it from exposure to dust, dirt, impact, moisture, fire, and other hazards.
- Sale or distribution of the device must be carried out in accordance with local legislation.
- Upon expiration of the device's service life, it must not be disposed of with unsorted household waste. Instead, it must be taken to an authorized collection point for electrical and electronic equipment for subsequent recycling and disposal in accordance with federal or local legislation. By ensuring proper disposal of this product, you help conserve natural resources and prevent potential harm to the environment and human health that may result from improper handling. For more detailed information about collection and disposal points for this product, please contact your local municipal authorities or your household waste disposal service.
- If a device malfunction is detected, immediately contact an authorized service center or dispose of the device.

Warranty Information

The manufacturer guarantees the device will function properly throughout the warranty period and be free from defects in materials and assembly. The warranty period commences on the date of purchase and applies to new products only. Warranty service includes free repair or replacement of defective parts that fail during the warranty period, provided the failure is not caused by consumer misuse and the product is operated in accordance with the user manual. Repairs or part replacements shall be performed at authorized service centers.

Warranty Period: 24 months
Service Life: 36 months

For the up-to-date list of authorized service centers, please visit: https://www.dns-shop.ru/service-center/

Additonal Information

Manufacturer: Yueli Group Co., Ltd.
No.999 Kaifa East Road, Zhouxiang Town, Cixi City, Ningbo City, Zhejiang Province, P.R.China.

Made in China.

The product meets the requirements of the CU TR (EAEU).

Product specifications, information and appearance are subject to change without prior notice, for quality improvement of our products.

Production date (mm.yyyy): _____ V.1

