User Manual

CPU Cooler
DPC-S2000H

DEXP

Dear Customer,

Thank you for choosing our products.
We are pleased to offer you products and devices designed and manufactured to the highest standards of quality, functionality, and design. Before using the product, please read this manual carefully. It contains important information regarding your safety, as well as recommendations for the proper use and care of the product. Please keep this manual in a safe place and use it as a reference guide during future operation of the product.

Intended Use

The CPU cooler is designed to dissipate heat from the processor and keep it within its normal operating temperature range.

Safety Precautions

- Keep all packaging materials, including plastic bags and foam inserts, out of reach of children. Packaging materials may pose a hazard to children.
- The device is not intended for use by children or persons with reduced physical, sensory, or mental capabilities unless they are supervised by a person responsible for their safety. Do not allow children to play with the device.
- Do not use the device if it shows visible signs of damage. Contact an authorized service center immediately if any damage is found.
- Do not touch the device’s moving parts.
- Do not operate the device near water or other liquids. Never place the device under running water or immerse it in water.
- Use the device only for its intended purpose as described in this manual.
- The device is not intended for commercial use.
- Do not make any modifications to the device’s design.

Specifications

- Model: DPC-S2000H.
- Trademark: DEXP.
- Cooler type: Tower.
- Bearing type: Hydrodynamic.
- Rated voltage: 12 V.
- Rated current: 0.15 A.
- TDP (heat dissipation capacity): 135 W.
- Fan speed: 800–2000 RPM ± 10%.
- Airflow: 32 ± 10%.
- Supported CPU sockets:
  - Intel LGA: 115X / 1700 / 1851 / 1366.
  - AMD: AM2 / AM2+ / AM3 / AM4 / AM5.
- Fan connector: 4-pin.
- Noise level: 25 ± 10% dBA.
- Heat pipes: 3.
- Fan dimensions: 90 × 90 × 25 mm.
- Cooler dimensions: 90 × 76 × 125 mm.
- Scope of application: Domestic.

Package Contents

- CPU cooler.
- Mounting hardware kit.
- User manual.

Installation

Components

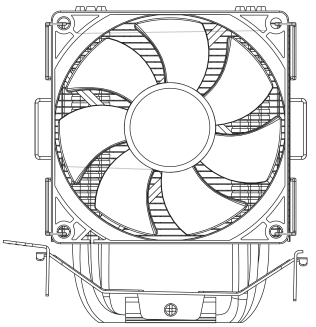

Fan and heatsink assembly

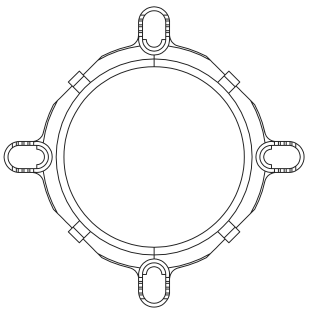

Intel mounting bracket

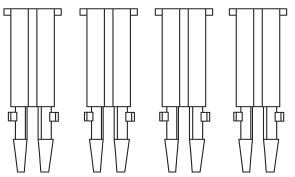

Fasteners

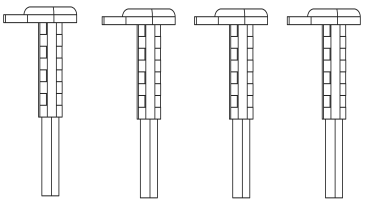

Anti-vibration pins

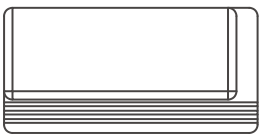

Thermal paste

Installation for Intel Processors

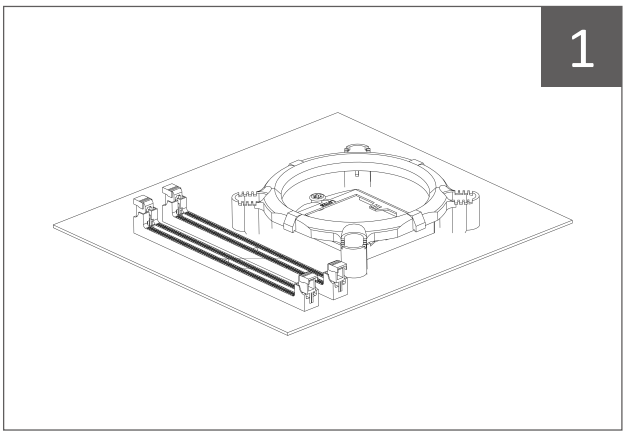

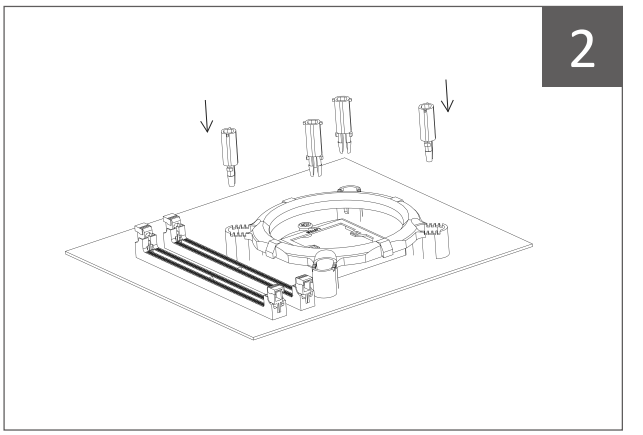

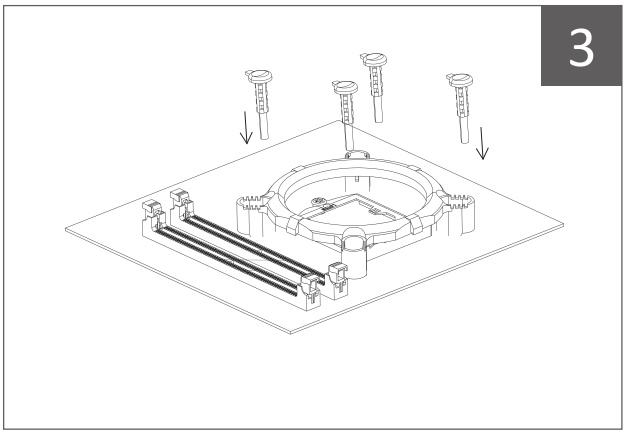

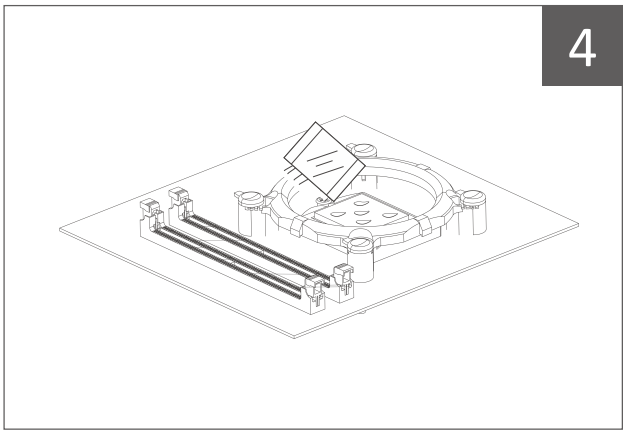

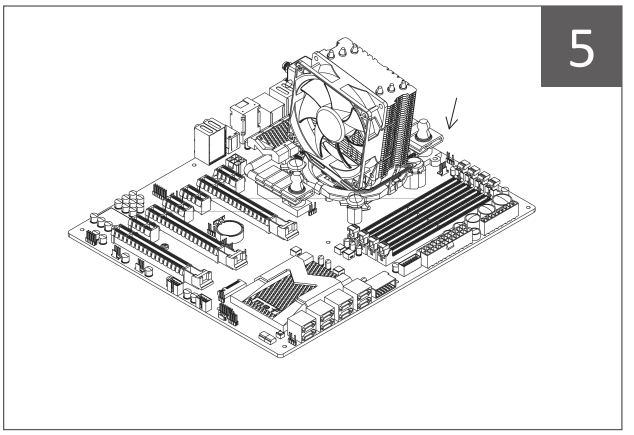

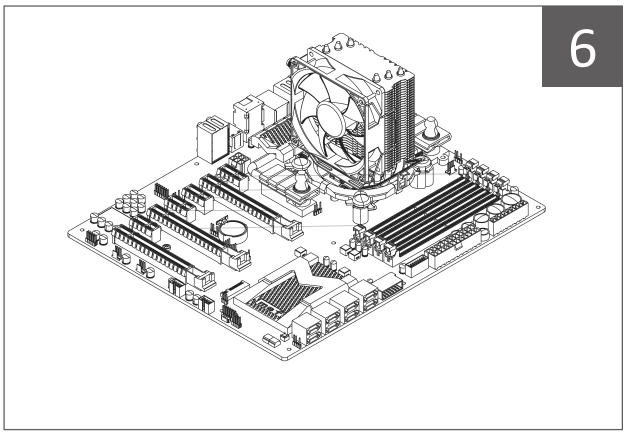

Installation for AMD Processors

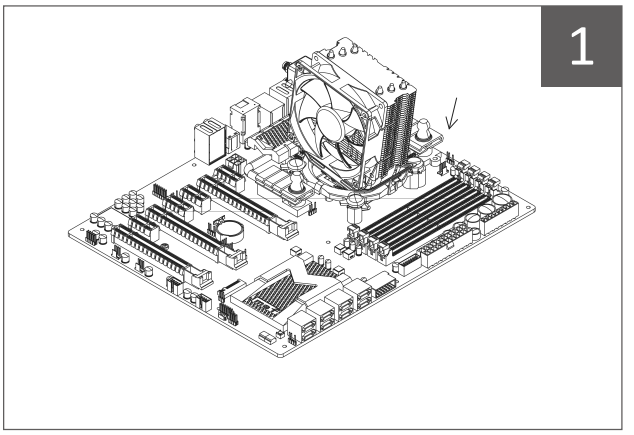

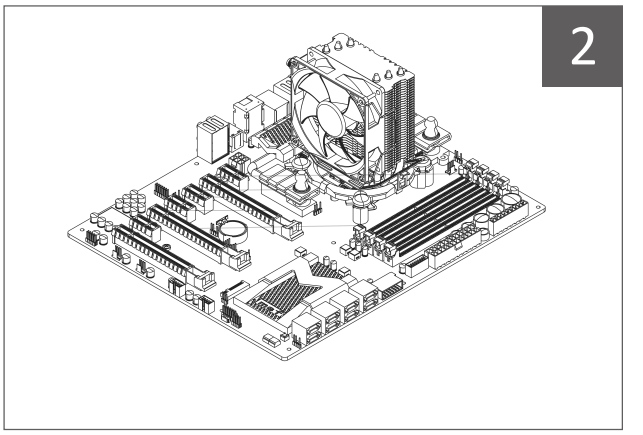

Rules and Conditions for Installation, Storage, Transportation, Sale (Distribution), and Disposal

- The installation and mounting conditions for the device are described in the «Installation» section of this user manual.
- The device must be stored in its original packaging, on heated premises, both at the manufacturer's and at the consumer's sites. The ambient temperature should be between +5 °C and +40 °C, and the relative humidity should not exceed 80% (non-condensing). The storage area must be free from aggressive contaminants (e.g., acid or alkali vapors) that could cause corrosion.
- The device must be transported under dry conditions.
- The device requires careful handling. Protect it from exposure to dust, dirt, impact, moisture, fire, and other hazards.
- Sale or distribution of the device must be carried out in accordance with local legislation.
- Upon expiration of the device's service life, it must not be disposed of with unsorted household waste. Instead, it must be taken to an authorized collection point for electrical and electronic equipment for subsequent recycling and disposal in accordance with federal or local legislation. By ensuring proper disposal of this product, you help conserve natural resources and prevent potential harm to the environment and human health that may result from improper handling. For more detailed information about collection and disposal points for this product, please contact your local municipal authorities or your household waste disposal service.
- If a device malfunction is detected, immediately contact an authorized service center or dispose of the device.

Warranty Information

The manufacturer guarantees the device will function properly throughout the warranty period and be free from defects in materials and assembly. The warranty period commences on the date of purchase and applies to new products only. Warranty service includes free repair or replacement of defective parts that fail during the warranty period, provided the failure is not caused by consumer misuse and the product is operated in accordance with the user manual. Repairs or part replacements shall be performed at authorized service centers.

Warranty Period: 12 months
Service Life: 24 months

For the up-to-date list of authorized service centers, please visit:
https://www.dns-shop.ru/service-center/

Additional Information

Manufacturer: Guangzhou Tianbo computer equipment Co., LTD.
38 Chuanye Road, High-Tech Industrial Park, Conghua District, Guangzhou, Guangdong Province, China.

Made in China.

Product specifications, information and appearance are subject to change without prior notice, for quality improvement of our products.

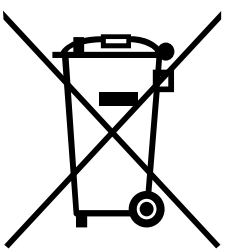

Production date (mm.yyyy): _____V.1

