User Manual

Monitor stand

DEXP

Dear Customer,

Thank you for choosing our products.
We are pleased to offer you products and devices designed and manufactured to the highest standards of quality, functionality, and design. Before using the product, please read this manual carefully. It contains important information regarding your safety, as well as recommendations for the proper use and care of the product. Please keep this manual in a safe place and use it as a reference guide during future operation of the product.

Intended Use

The monitor stand is designed to support a monitor.

Safety Precautions

- Use the product only for its intended functional purpose.
- Do not exceed the maximum permissible weight.
- Assemble the product supplied in a disassembled state strictly in accordance with the accompanying documentation.
- When using the product in the immediate vicinity of heating appliances, its surface must be protected from heat during operation. The temperature of the furniture components must not exceed +40 °C.
- To avoid the risk of suffocation, keep packaging elements and device parts out of the reach of children. Do not leave packaging elements near cribs, bassinets, strollers, or playpens.
- Protect the monitor stand and its electrical components from contact with water and other liquids.
- This device is not intended for use by children or persons with reduced physical, sensory, or mental capabilities, unless they are supervised by a person responsible for their safety. Do not allow children to play with the device.
- This device is not intended for commercial use.

Specifications

- Model: Monitor stand.
- Trademark: DEXP.
- Power supply: 5 V ⎓ 0.2 A.
- Maximum load: 20 kg.
- Distance from desk: 120 mm.
- Material: Plastic, steel.
- Dimensions: 600 × 230 × 120 mm.
- Stand backlight: RGB.
- Scope of application: Domestic.

Package Contents

- Monitor stand.
- Mounting hardware.
- Cable set.
- User manual.

Assembly Instructions

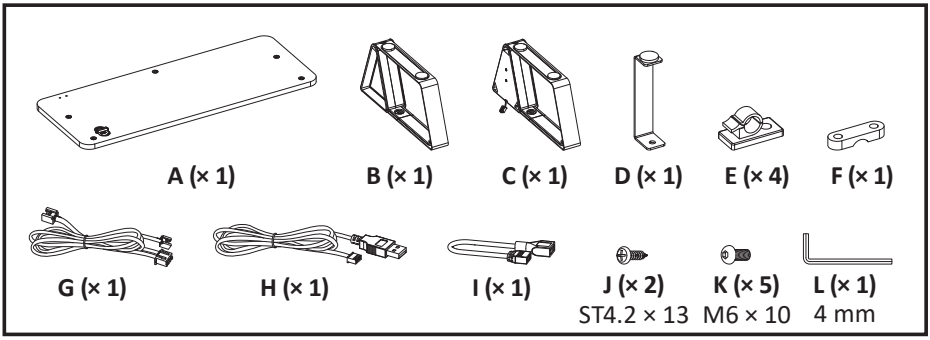

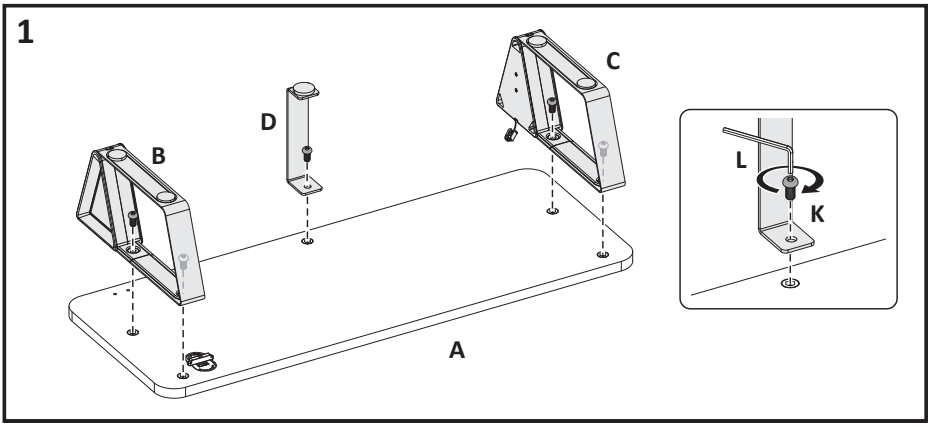

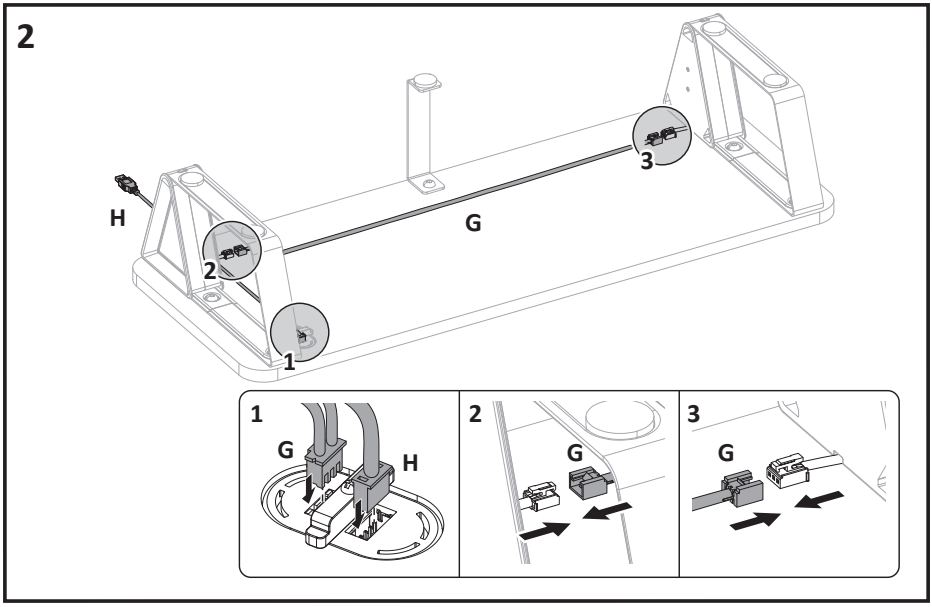
2
H
G
3
2
1
1
G
H
2
G
3
G

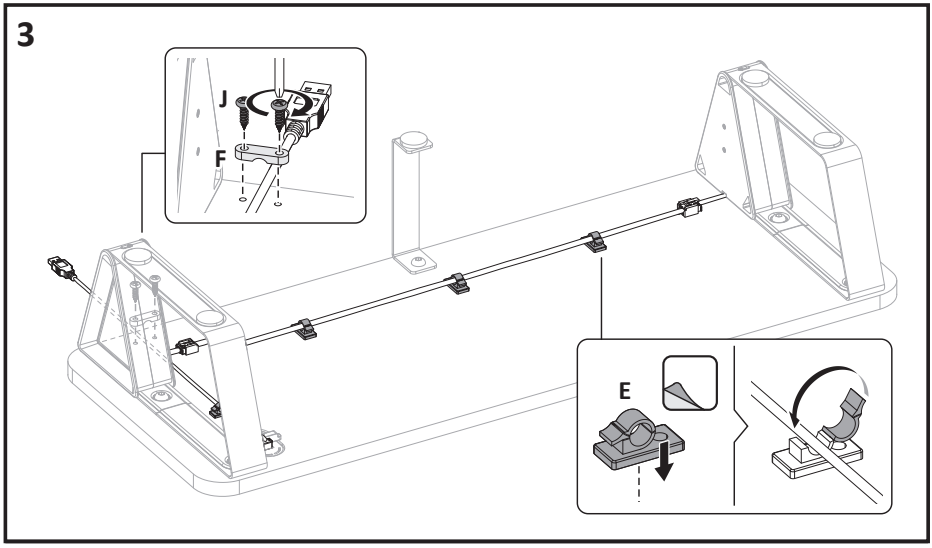
3
J
F
E

Operating Instructions

Connect the device to the PC via a USB port using the included cable (**I**).

Backlight Control

- Press and hold the «MODE» button on the stand to turn the power on/off.
- To switch lighting effects, use the «MODE» button. Each press changes the modes in the following sequence: Static → Breathing → Gradient Cycle → Rainbow Gradient.
- When the «Static» or «Breathing» mode is selected, you can adjust the backlight color. To do this, use the «COLOR» button — each press changes the color in the following sequence:
  - Static (red → green → blue → cyan → yellow → white → pink → orange).
  - Breathing (red → green → blue → cyan → yellow → white → pink → cyclic change).

Backlight Control via External Device

1. Connect the stand to an external device using the included cable.

   Note: The external device can be a separate RGB controller or a PC with installed software for adjusting/synchronizing the RGB backlight on the device.

2. Double-press the «MODE» button to synchronize with the external device. The button's backlight brightness will decrease.

Note: If the button indicator is dim and the backlight is off when you first turn on the device, the device is in external backlight control mode. Double-press the «MODE» button to exit this mode. The button indicator will become brighter, and the backlight will turn on.

Rules and Conditions for Installation, Storage, Transportation, Sale (Distribution), and Disposal

- The installation and mounting conditions for the product are described in the «Assembly Instructions» section of this user manual.
- The product must be stored in its original packaging, on heated premises, both at the manufacturer's and at the consumer's sites. The ambient temperature should be between +5 °C and +40 °C, and the relative humidity should not exceed 80% (non-condensing). The storage area must be free from aggressive contaminants (e.g., acid or alkali vapors) that could cause corrosion.
- The product must be transported under dry conditions.
- The product requires careful handling. Protect it from exposure to dust, dirt, impact, moisture, fire, and other hazards.
- Sale or distribution of the product must be carried out in accordance with local legislation.
- Upon expiration of the product's service life, it must not be disposed of with unsorted household waste. Instead, it must be taken to an authorized collection point for electrical and electronic equipment for subsequent recycling and disposal in accordance with federal or local legislation. By ensuring proper disposal of this product, you help conserve natural resources and prevent potential harm to the environment and human health that may result from improper handling. For more detailed information about collection and disposal points for this product, please contact your local municipal authorities or your household waste disposal service.
- If a product malfunction is detected, immediately contact an authorized service center or dispose of the product.

Warranty Information

The manufacturer warrants that the product is free from defects in materials and assembly. The warranty period commences on the date of purchase and applies only to new products. Warranty service includes free repair or replacement of defective parts that fail during the warranty period, provided the failure is not caused by consumer misuse and the product is operated in accordance with the user manual. Repairs or part replacements shall be performed at authorized service centers. Failure to follow the described safety precautions will void your warranty.

Warranty Period: 12 months
Service Life: 24 months

For the up-to-date list of authorized service centers, please visit:
https://www.dns-shop.ru/service-center/

Additional Information

Manufacturer: Zhejiang Purui New Material Co., Ltd.
No.399, Zhenlong Sixth Road, Binhai Economic Development Zone, Cixi, Zhejiang Province, China.

Made in China.

The product meets the requirements of the technical regulations of the TR CU (EAEU).

Product specifications, information and appearance are subject to change without prior notice, for quality improvement of our products.



Production date (mm.yyyy): _____ V.1

