TERRAMASTER

Data Storage Master

TerraMaster USB Hard Drive Enclosure

User Manual

Model: D6-320

Copyright © 2023 TerraMaster All Rights Reserved.

1. Appearance

Panel Illustration

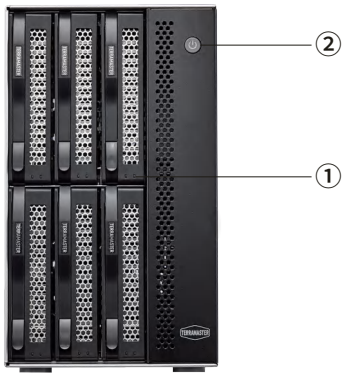

Rear Cover Illustration

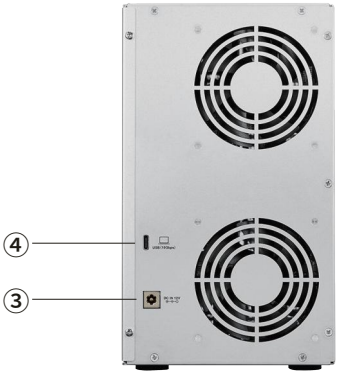

NO.	Item	Description
①	Hard Drive Indicators	Off: Hard drive not detected or hard drive in sleep mode Green: Hard drive is ready Flashing Green: Reading/writing
②	Power Button	Short press to power on; long press (for 3 seconds) to power off

No.	Item	Description
③	USB Type-C Interface	Data transmission interface
④	Power Jack	DC 12V power input Warning: Only use the power adapter originally supplied with your device. Use of any other adapter may result in damage.

2. Hard Drive Installation

1. Pull the handle out of the hard drive tray, grasp it, and draw the hard drive tray from the device. Fix the hard drive and the tray in place using the screws provided, and insert the tray into the device along the track. When inserting the tray, open the handle and keep the handle in this position. Otherwise, the tray may not be inserted into the device correctly.



2. Once the tray is fully inserted, close the handle. Hard drive installation is now complete.
3. To install additional hard drives, repeat steps 1 and 2.



3. Connect Hardware

1. Using the USB cable that shipped with the device, connect the device to your computer;
2. Using the supplied power adapter, connect the device to a power supply.
   Warning: Please do not use a third-party power adapter. If you do, the device may sustain severe damage, and in extreme cases, damage to the physical body may occur;
3.To turn the device on, press the power switch (located on the device panel).

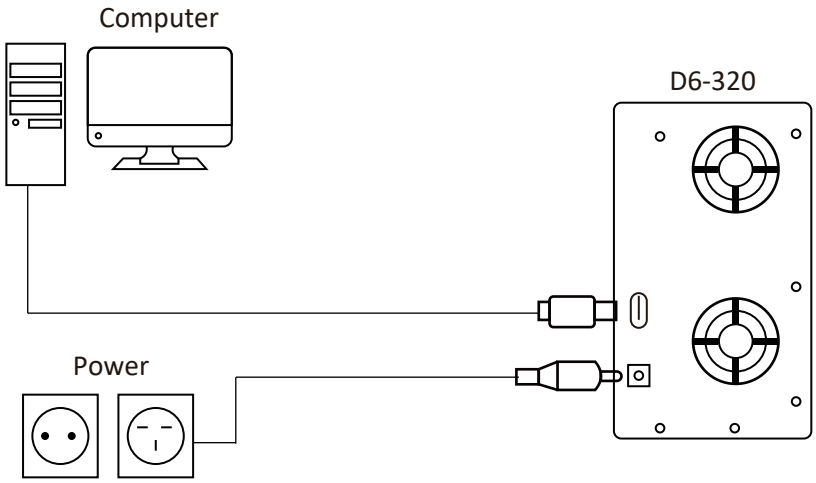

4. Initialise HDD

The new hard drives should be initialized before putting into use. Since the initialisation process differs depending on your operating system (OS), please follow the instructions that apply to you.

Windows OS

1. Open “Computer Management” and navigate to “Storage > Disk Management”;
2. Find an unallocated disk in the menu, right-click the disk, and select “Initialise Disk” from the drop-down menu;
3. Complete the setup in the “Initialise Disk” menu and click “OK”. Note: If you don’t select GPT partition, then the maximum partition capacity will be restricted at 2TB);
4. Once the disk initialisation process is finished, right-click the unallocated disk and select “New Simple Volume” from the drop-down menu;
5. Once you’ve created a new volume, the RAID initialisation process is complete.

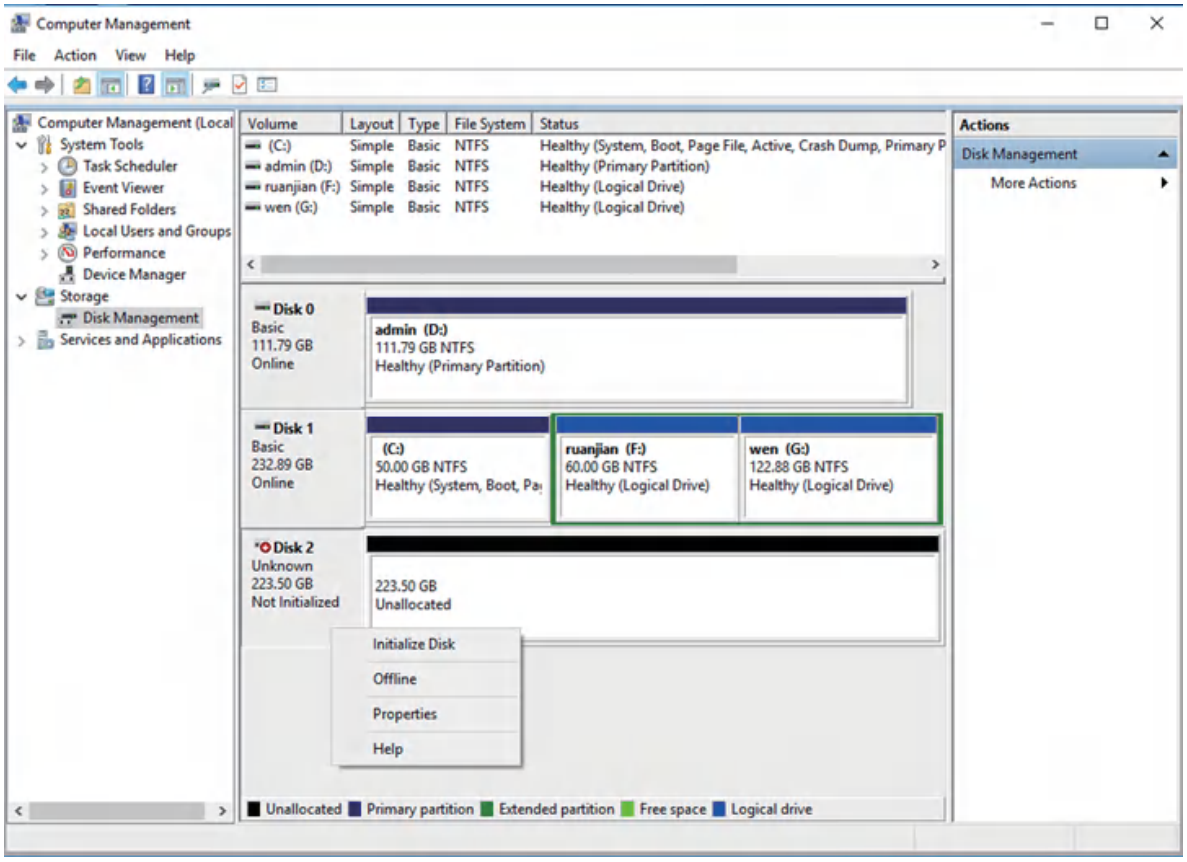
Computer Management
File Action View Help
Computer Management (Local
System Tools
Task Scheduler
Event Viewer
Shared Folders
Local Users and Groups
Performance
Device Manager
Storage
Disk Management
Services and Applications
Volume Layout Type File System Status
(C:) Simple Basic NTFS Healthy (System, Boot, Page File, Active, Crash Dump, Primary P
admin (D:) Simple Basic NTFS Healthy (Primary Partition)
ruanjian (F:) Simple Basic NTFS Healthy (Logical Drive)
wen (G:) Simple Basic NTFS Healthy (Logical Drive)
Actions
Disk Management
More Actions
Disk 0
Basic
111.79 GB
Online
admin (D:)
111.79 GB NTFS
Healthy (Primary Partition)
Disk 1
Basic
232.89 GB
Online
(C:)
50.00 GB NTFS
Healthy (System, Boot, Pa
ruanjian (F:)
60.00 GB NTFS
Healthy (Logical Drive)
wen (G:)
122.88 GB NTFS
Healthy (Logical Drive)
Disk 2
Unknown
223.50 GB
Not Initialized
223.50 GB
Unallocated
Initialize Disk
Offline
Properties
Help
Unallocated Primary partition Extended partition Free space Logical drive

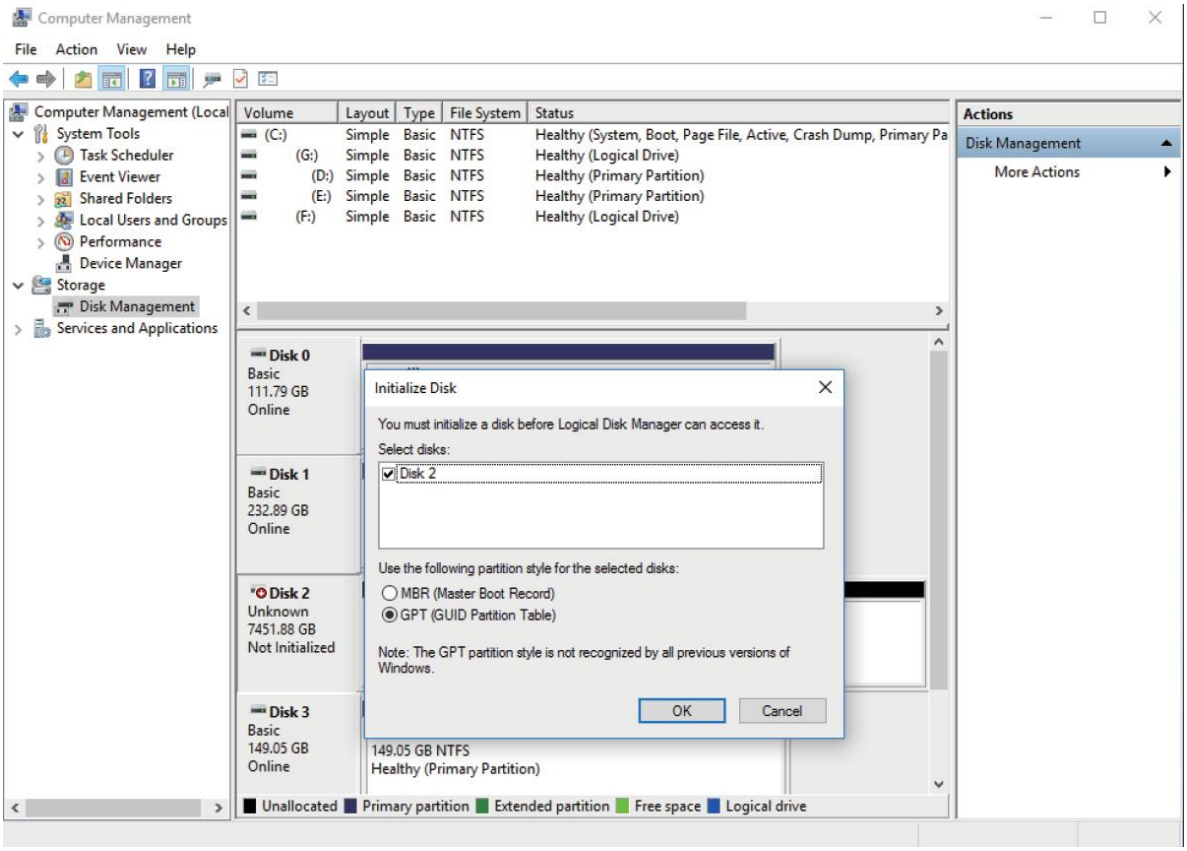
Computer Management
File Action View Help
Computer Management (Local
System Tools
Task Scheduler
Event Viewer
Shared Folders
Local Users and Groups
Performance
Device Manager
Storage
Disk Management
Services and Applications
Volume Layout Type File System Status
(C:) Simple Basic NTFS Healthy (System, Boot, Page File, Active, Crash Dump, Primary Pa
(G:) Simple Basic NTFS Healthy (Logical Drive)
(D:) Simple Basic NTFS Healthy (Primary Partition)
(E:) Simple Basic NTFS Healthy (Primary Partition)
(F:) Simple Basic NTFS Healthy (Logical Drive)
Actions
Disk Management
More Actions
Disk 0
Basic
111.79 GB
Online
Disk 1
Basic
232.89 GB
Online
Disk 2
Unknown
7451.88 GB
Not Initialized
Disk 3
Basic
149.05 GB
Online
149.05 GB NTFS
Healthy (Primary Partition)
Initialize Disk
You must initialize a disk before Logical Disk Manager can access it.
Select disks:
Disk 2
Use the following partition style for the selected disks:
MBR (Master Boot Record)
GPT (GUID Partition Table)
Note: The GPT partition style is not recognized by all previous versions of Windows.
OK
Cancel
Unallocated Primary partition Extended partition Free space Logical drive

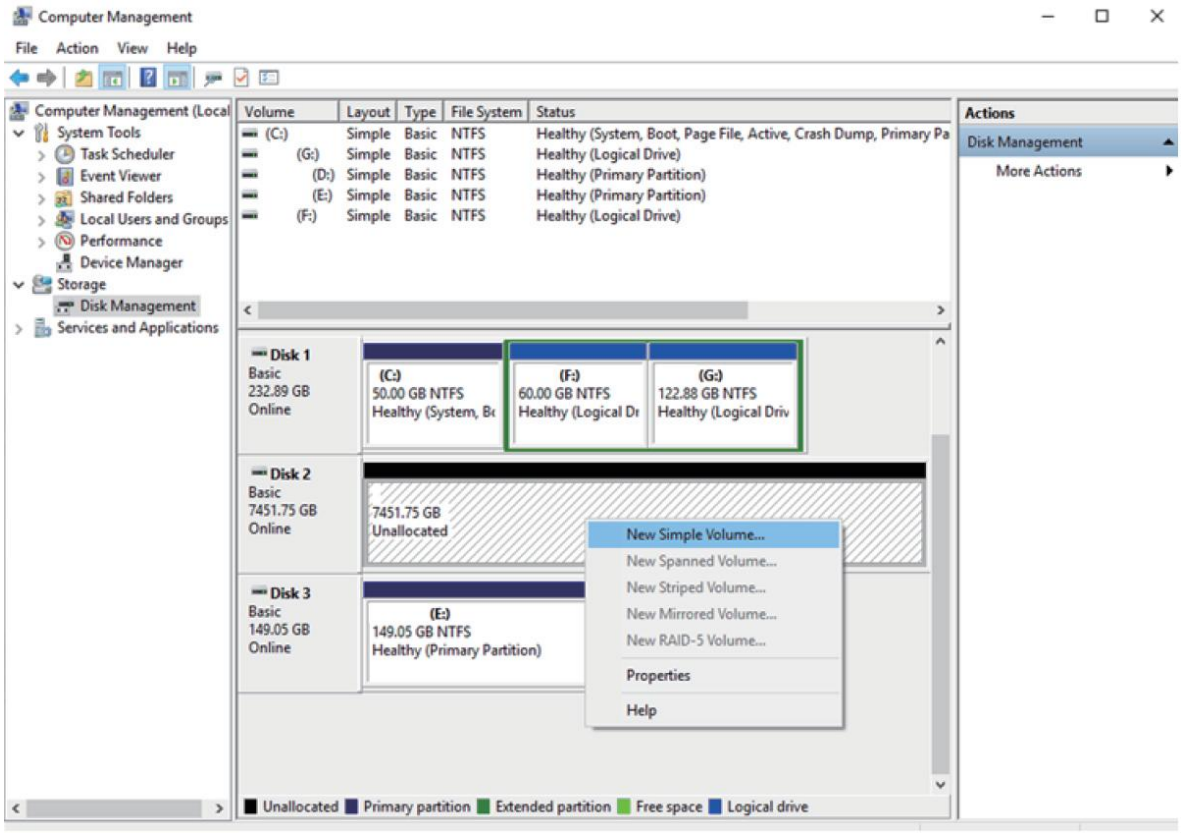

Mac OS

1. Go to “Disk Utility > External”;
2. Use the menu to find an unallocated disk;
3. Select the unallocated disk and click “Erase”;
4. Select the relevant “Name”, “Format”, and “Scheme” from the menu and click “Erase”;
5. Once the “Erase” process is finished, RAID initialisation is complete.




Disk Utility
First Aid
Partition
Erase
Mount
Info
Internal
TOSHIBA MK32...
mac
Recovery HD
userspace
External
General USB Fla...
General USB Fla...
Erase "General USB Flash Disk Media"?
Erasing "General USB Flash Disk Media" will destroy of all the data stored on it. Enter a name, choose a partition map and format.
Name:
TerraMaster TDAS
Format:
OS X Extended (Journaled)
Scheme
GUID Partition Map
Cancel
Erase
3.94 GB
Connection:
USB
Child count:
0
Partition Map:
Not Supported
Type:
Disk
S.M.A.R.T. status:
Not Supported
Device:
disk0