BOSCH

Register your new device on MyBosch now and get free benefits:
bosch-home.com/welcome

MyBosch

Free standing cooker

HKA090220U

[en] User manual

Table of contents

1 Safety 2
2 Preventing material damage 5
3 Environmental protection and saving energy 6
4 Installation and connection 7
5 Familiarising yourself with your appliance 9
6 Accessories 12
7 Before using for the first time 13
8 Operating the hotplate 13
9 Basic operation 14
10 Rapid heating 14
11 Cleaning and servicing 14
12 Cleaning aid 17
13 Rails 17
14 Appliance door 18
15 Troubleshooting 21
16 Transportation and disposal 22
17 Customer Service 22
18 How it works 22

⚠ 1 Safety

Observe the following safety instructions.

1.1 Intended use

Read the information on intended use to ensure that you use the appliance correctly and safely.
The figures in these instructions are intended for information purposes.
Only a licensed professional may connect appliances without plugs. Damage caused by incorrect connection is not covered under the warranty.
Only use the appliance as follows:
- To prepare meals and drinks.
- Under supervision. Never leave the appliance unattended when cooking for short periods.
- In private households and in enclosed spaces in a domestic environment.
- Up to an altitude of max. 4000 m above sea level.

Do not use the appliance:
- On boats or in vehicles.
- as a room heater.
- with an external timer or a remote control.

You cannot operate the appliance with a timer or remote control.
Always place accessories in the cooking compartment the right way round.

1.2 Restriction on user group

This appliance may be used by children aged 8 or over and by people who have reduced physical, sensory or mental abilities or inadequate experience and/or knowledge, provided that they are supervised or have been instructed on how to use the appliance safely and have understood the resulting dangers.
Do not let children play with the appliance.
Children must not perform cleaning or user maintenance unless they are at least 15 years old and are being supervised.
Keep children under the age of 8 years away from the appliance and power cable.

1.3 Safe use

⚠ WARNING – Risk of fire!

The appliance will become hot.
- ▸ Do not keep combustible objects or aerosol cans in drawers directly underneath the hob.
- ▸ Never store or use combustible materials (e.g. spray cans or cleaning agents) under the appliance or in its immediate vicinity.

The cooking surface becomes very hot.
- ▸ Never place flammable objects on the cooking surface or in its immediate vicinity.
- ▸ Never place objects on the cooking surface.

Leaving fat or oil cooking on an unattended hob can be dangerous and may lead to fires.
- ▸ Never leave hot oil or fat unattended.
- ▸ Never attempt to extinguish a fire using water; instead, switch off the appliance and then cover with a lid or a fire blanket.

Hob covers can cause accidents, for example due to overheating, catching fire or materials shattering.
- ▸ Do not use hob covers.

Opening the appliance door creates a draught. Greaseproof paper may come into contact with the heating element and catch fire.

- ▸ Never place greaseproof paper loosely over accessories when preheating the appliance and while cooking.
- ▸ Always cut greaseproof paper to size and use a plate or baking tin to hold it down.

Combustible objects that are left in the cooking compartment may catch fire.

- ▸ Never store combustible objects in the cooking compartment.
- ▸ If smoke is emitted, the appliance must be switched off or the plug must be pulled out and the door must be held closed in order to stifle any flames.

Food may catch fire.

- ▸ The cooking process must be monitored. A short process must be monitored continuously.

⚠ WARNING – Risk of burns!

The appliance and its parts that can be touched become hot during use, particularly the hob surround, if fitted.

- ▸ Caution should be exercised here in order to avoid touching heating elements.
- ▸ Young children under 8 years of age must be kept away from the appliance.

Hob protective grilles may cause accidents.

- ▸ Never use hob protective grilles.

Accessories and cookware get very hot.

- ▸ Always use oven gloves to remove accessories or cookware from the cooking compartment.

The appliance becomes hot during operation.

- ▸ Allow the appliance to cool down before cleaning.

When the cooking compartment is hot, any alcoholic vapours inside may catch fire.

- ▸ Only use small quantities of drinks with a high alcohol content in food.
- ▸ Open the appliance door carefully.

The appliance and its parts that can be touched become hot during use.

- ▸ Caution should be exercised here in order to avoid touching heating elements.
- ▸ Young children under 8 years of age must be kept away from the appliance.

⚠ WARNING – Risk of electric shock!

Incorrect repairs are dangerous.

- ▸ Repairs to the appliance should only be carried out by trained specialist staff.
- ▸ Only use genuine spare parts when repairing the appliance.
- ▸ If the power cord of this appliance is damaged, it must be replaced by the manufacturer, the manufacturer's Customer Service or a similarly qualified person in order to prevent any risk.

If the appliance or the power cord is damaged, this is dangerous.

- ▸ Never operate a damaged appliance.
- ▸ Never operate an appliance with a cracked or fractured surface.
- ▸ Call customer services. → *Page 22*

An ingress of moisture can cause an electric shock.

- ▸ Do not use steam- or high-pressure cleaners to clean the appliance.

The insulation on cables of electrical appliances may melt if it touches hot parts of the appliance.

- ▸ Never bring electrical appliance cables into contact with hot parts of the appliance.

If the insulation of the power cord is damaged, this is dangerous.

- ▸ Never let the power cord come into contact with hot appliance parts or heat sources.
- ▸ Never let the power cord come into contact with sharp points or edges.
- ▸ Never kink, crush or modify the power cord.

⚠ WARNING – Risk of injury!

The hinges on the appliance door move when the door is opened and closed, which could trap your fingers.

- ▸ Keep your hands away from the hinges.

Scratched glass in the appliance door may develop into a crack.

- ▸ Do not use any harsh or abrasive cleaners or sharp metal scrapers to clean the glass on the oven door, as they may scratch the surface.

If you leave the appliance door open, people may bump into it, resulting in injury.

- ▸ Always keep the appliance door closed during and after operation.

Saucepans may suddenly jump due to liquid between the saucepan base and the hotplate.
- Always keep hotplates and saucepan bases dry.

⚠ WARNING – Risk of scalding!

The accessible parts of the appliance become hot during operation.
- Never touch these hot parts.
- Keep children at a safe distance.

Hot steam may escape when you open the appliance door. Steam may not be visible, depending on the temperature.
- Open the appliance door carefully.
- Keep children at a safe distance.

If there is water in the cooking compartment when it is hot, this may create hot steam.
- Never pour water into the cooking compartment when the cooking compartment is hot.

⚠ WARNING – Risk of suffocation!

Children may put packaging material over their heads or wrap themselves up in it and suffocate.
- Keep packaging material away from children.
- Do not let children play with packaging material.

Children may breathe in or swallow small parts, causing them to suffocate.
- Keep small parts away from children.
- Do not let children play with small parts.

⚠ WARNING – Risk of tipping!

If the appliance is placed on a base and is not secured, it may slide off the base.

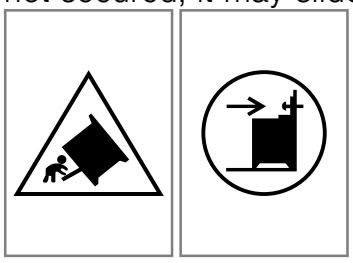

- Connect the appliance securely to the base.
- Warning: To prevent the appliance from tipping over, attach a compensation device.
- Observe the instructions for the installation.

1.4 Plinth drawer

⚠ WARNING – Risk of fire!

The surfaces of the plinth drawer may become very hot.
- Only store oven accessories in the drawer.
- Do not keep any flammable or combustible objects in the plinth drawer.

1.5 Halogen bulb

⚠ WARNING – Risk of burns!

The bulbs in the cooking compartment get very hot. There is still a risk of burning for some time after they have been switched off.
- Do not touch the glass cover.
- Avoid contact with your skin when cleaning.

⚠ WARNING – Risk of electric shock!

When changing the bulb, the bulb socket contacts are live.
- Before replacing the bulb, ensure that the appliance is switched off in order to prevent a potential electric shock.
- Also unplug the appliance from the mains or switch off the circuit breaker in the fuse box.

2 Preventing material damage

2.1 Oven area

Follow the corresponding instructions when using the oven.

ATTENTION!

Objects on the cooking compartment floor at over 50 °C will cause heat to build up. The baking and roasting times will no longer be correct and the enamel will be damaged.

- ▸ Do not place any accessories, greaseproof paper or foil of any kind on the cooking compartment floor.
- ▸ Only place cookware on the cooking compartment floor if a temperature above 50 °C has been set.

If aluminium foil comes into contact with the door pane, it could cause permanent discolouration.

- ▸ Do not allow aluminium foil in the cooking compartment to come into contact with the door pane.

When the cooking compartment is hot, any water inside it will create steam. The change in temperature may cause damage.

- ▸ Never pour water into the cooking compartment when it is still hot.
- ▸ Never place cookware containing water on the cooking compartment floor.

The prolonged presence of moisture in the cooking compartment leads to corrosion.

- ▸ Allow the cooking compartment to dry after use.
- ▸ Do not keep moist food in the cooking compartment for a long time with the door closed.
- ▸ Do not store food in the cooking compartment.

Leaving the appliance to cool down with the door open will damage the front of neighbouring kitchen units over time.

- ▸ Always allow the cooking compartment to cool down with the door closed after cooking at high temperatures.
- ▸ Take care not to trap anything in the appliance door.
- ▸ Only leave the cooking compartment to dry with the door open if a lot of moisture was produced during operation.

Fruit juice dripping from the baking tray leaves stains that cannot be removed.

- ▸ When baking very juicy fruit flans, do not pack too much on the baking tray.
- ▸ If possible, use the deeper universal pan.

Using oven cleaner in a hot cooking compartment damages the enamel.

- ▸ Never use oven cleaner in the cooking compartment when it is still warm.
- ▸ Remove all food remnants from the cooking compartment and the appliance door before you next heat up the appliance.

If the seal is very dirty, the appliance door will no longer close properly during operation. This may damage the front of adjacent kitchen units.

- ▸ Keep the seal clean at all times.
- ▸ Never operate the appliance if the seal is damaged or missing.

Sitting or placing objects on the appliance door may damage it.

- ▸ Do not place or hang objects on the appliance door.
- ▸ Do not place cookware or accessories on the appliance door.

If you carry or move the appliance by the handle on the cover or move, the handle may break off and cause damage to the hinges. The handle of the cover is not designed for the weight of the appliance.

- ▸ Do not carry or move the appliance by the handle on the cover.

When grilling, due to high temperatures, the baking tray or universal pan may become deformed and damage the enamel coating when they are removed.

- ▸ When grilling, do not insert the baking tray or universal pan higher than level 3.
- ▸ Above shelf position 3, only grill directly on the wire insert.

2.2 Hob

Follow the corresponding instructions when using the appliance.

Avoiding material damage

This is where you can find the most common causes of damage and tips on how to avoid them.

Damage	Cause	Measure
Stains	Unsupervised cooking process.	Monitor the cooking process.
Stains, blisters	Spilled food, especially food with a high sugar content.	Remove immediately with a glass scraper.
Stains, blisters or fractures in the glass	Defective cookware, cookware with melted enamel or cookware with copper or aluminium base.	Use suitable cookware that is in a good condition.
Stains, discolouration	Unsuitable cleaning methods.	Only use cleaning agents that are suitable for glass ceramic, and only clean the hob when it is cold.

Damage	Cause	Measure
Blisters or fractures in the glass	Knocks or falling cookware, cooking accessories or other hard or pointed objects.	When cooking, do not hit the glass or let objects fall onto the hob.
Scratches, discolouration	Rough cookware bases or moving the cookware on the hob.	Check the cookware. Lift the cookware when moving it.
Scratches	Salt, sugar or sand.	Do not use the hob as a work surface or storage space.
Damage to the appliance	Cooking with frozen cookware.	Never use frozen cookware.
Damage to the cookware or the appliance	Cooking without contents.	Never place or heat empty cookware on a hot cooking zone.
Glass damage	Melted material on the hot cooking zone or hot pot lid on the glass.	Do not place greaseproof paper or aluminium foil nor plastic containers or pot lids on the hob.
Overheating	Hot cookware on the control panel or on the frame.	Never place hot cookware on these areas.

2.3 Drawer area

Follow the corresponding instructions when using the drawer.

ATTENTION!

Do not place hot objects in the plinth drawer. The plinth drawer may be damaged.

- ▸ Do not place hot objects in the plinth drawer.

Do not place oven accessories that exceed the height of the drawer into the plinth drawer. Otherwise, this may damage the appliance.

- ▸ Do not place oven accessories that exceed the height of the drawer into the plinth drawer.

3 Environmental protection and saving energy

3.1 Disposing of packaging

The packaging materials are environmentally compatible and can be recycled.

- ▸ Sort the individual components by type and dispose of them separately.

3.2 Saving energy

If you follow these instructions, your appliance will use less power.

Only preheat the appliance if the recipe or the recommended settings tell you to do so.

- Not preheating the appliance can reduce the energy used by up to 20%.

Use dark-coloured, black-coated or enamelled baking tins.

- These types of baking tin absorb the heat particularly well.

Open the appliance door as little as possible during operation.

- This maintains the temperature in the cooking compartment and eliminates the need for the appliance to reheat.

When baking multiple dishes, do so in succession or in parallel.

- The cooking compartment is heated after baking the first dish. This reduces the baking time for the second cake.

If the cooking time is relatively long, you can switch the appliance off 10 minutes before the cooking time ends.

- There will be enough residual heat to finish cooking the dish.

Remove any accessories that are not being used from the cooking compartment.

- Accessories that are not being used do not need to be heated.

Allow frozen food to defrost before cooking.

- This saves the energy that would otherwise be required to defrost it.

Note:

The appliance requires:

- A maximum of 1 W when the appliance is in operation with the display switched on
- A maximum of 0.5 W when the appliance is in operation with the display switched off

Saving energy

If you follow these instructions, your appliance will use less power.

Select the cooking zone to match the size of your pan. Centre the cookware on the hob.
Use cookware whose base diameter is the same diameter as the hotplate.

Tip: Cookware manufacturers often give the upper diameter of the saucepan. It is often larger than the base diameter.

- Unsuitable cookware or incompletely covered cooking zones consume a lot of energy.

Cover saucepans with suitable lids.
- Cooking without a lid consumes considerably more energy.

Lift lids as infrequently as possible.
- When you lift the lid, a lot of energy escapes.

Use a glass lid.
- You can see into the pan through a glass lid without having to lift it.

Use pots and pans with flat bases.
- Uneven bases increase energy consumption.

Use cookware that is suitable for the quantity of food.
- Large items of cookware containing little food need more energy to heat up.

Cook with only a little water.
- The more water that is contained in the cookware, the more energy is required to heat it up.

Turn down to a lower power level early on.
- If you use an ongoing power level that is too high, you will waste energy.
- Unused residual heat increases energy consumption.

4 Installation and connection

You can find out where and how best to install your appliance here. You will also learn how to connect your appliance to the power supply.

4.1 Electrical connection

The appliance must be connected to the mains by a licensed expert. You must comply with the requirements of your electricity supplier.
- If the power cord of this appliance is damaged, it must be replaced by the manufacturer, the manufacturer's Customer Service or a similarly qualified person in order to prevent any risk.
- Any damage arising from the appliance being connected incorrectly will invalidate the warranty.

Information on the electrical connection by the installer:
- If the plug is not accessible following installation, an all-pole isolating unit with a contact clearance of at least 3 mm must be available on the installation side. This is not necessary if the appliance is connected via a plug that is accessible to the user.
- Electrical safety: The cooker corresponds to safety class I and may only be used in conjunction with a safety earth terminal.
- To connect the appliance, use H 05 VV-F cables or other equivalent cables.

Important information about the electrical connection

Note the following information and ensure that:

⚠ WARNING – Risk of electric shock!

There is a risk of electric shock if you touch live components.
- ▸ Hold the mains plug with dry hands only.
- ▸ Never pull out the mains plug from the socket while the appliance is in operation.
- ▸ Pull out the power cable directly at the plug and never by pulling the power cable as this may become damaged.

- Fit the mains plug and socket together.
- The mains plug can be accessed at all times.
- The cross section of the cable is sufficient.
- The mains cable is not kinked, crushed, modified or severed.
- If required, the mains cable must only be replaced by a qualified electrician. A replacement mains cable is available from the after-sales service.
- Do not use any multiple plugs or multi-connectors and extension cords.
- The earthing system is correctly installed.
- If using a residual current device, only use one that bears the mark ⎓. The presence of this mark is the only way to be sure that it fulfils all the applicable regulations.
- The mains cable does not come into contact with heat sources.

4.2 Setting up the appliance

Place the appliance on a smooth surface.
Never set up the appliance behind a decorative door or the door of a kitchen unit. There is a risk of overheating.

Adjacent units

Any adjacent units must not be made of flammable materials. The fronts of any adjacent units must be heat-resistant up to at least 90 °C.

Wall fixing

To prevent the appliance from tipping over, you must fix it to the wall using the enclosed brackets. To secure the appliance to the wall, follow the installation instructions.

4.3 Door lock

To prevent children reaching into the oven when it is hot, the oven door is equipped with a lock. The door lock is located at the top of the oven door.

Note: If the door safety lock is no longer needed or if it is soiled.

Opening the appliance door

▸ Press the lock upwards.

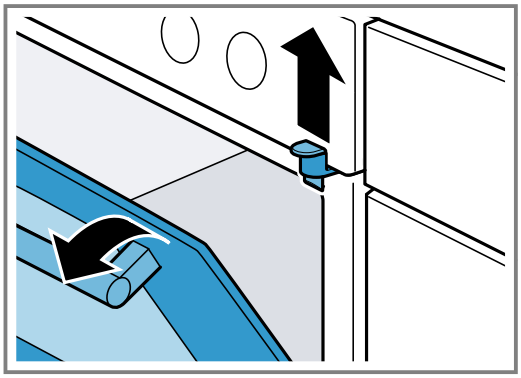

Removing the door lock

1. Open the oven door.
   → *"Opening the appliance door", Page 8*
2. Unscrew the screw and remove the door lock.

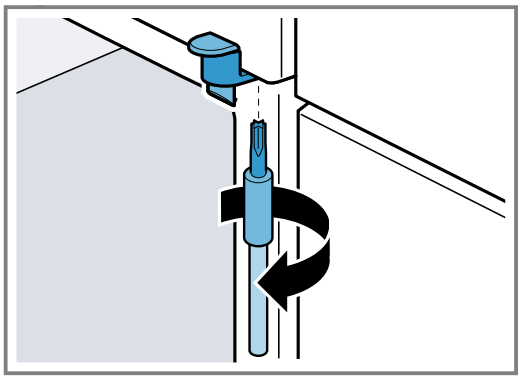

3. Close the appliance door.

5 Familiarising yourself with your appliance

5.1 Your appliance

You can find an overview of the parts of your appliance here.

Note: On certain models, specific details such as colour and shape may differ from those pictured.

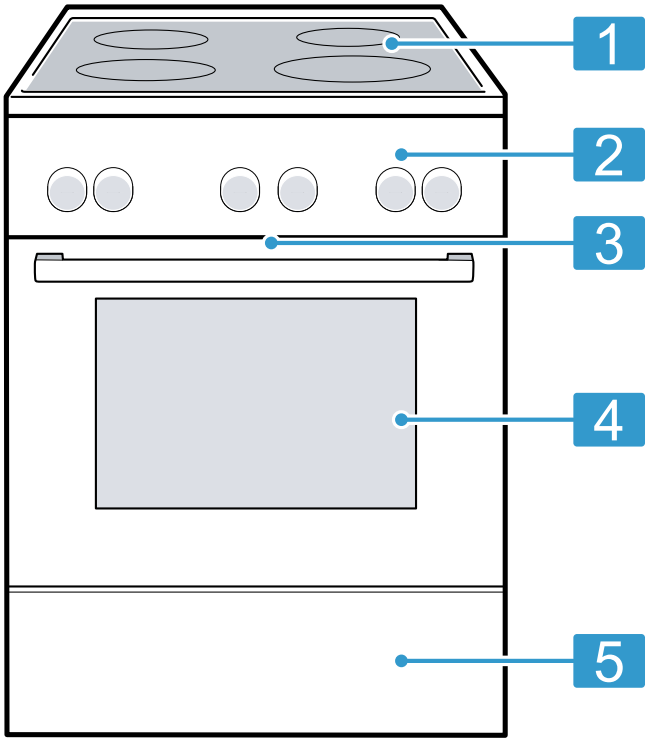

	Explanation
1	Hob
2	Control panels
3	Cooling fan[1]
4	Appliance door
5	Plinth drawer[1]

[1] Depending on the appliance specifications

5.2 Hob

You can find an overview of the different activations of the hotplates here.
On certain models, specific details such as colour and shape may differ from those pictured.

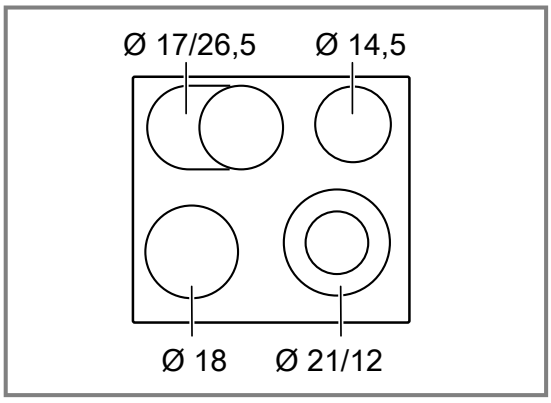

Ø = cm

	Hotplate	Activating and deactivating
○	Single-circuit hotplate	
◎	Dual-circuit hotplate	Turn the hotplate selector clockwise to ◎. Select the power level. Switching off: Turn the hotplate selector to 0 and reset. Never turn the hotplate selector to 0 via ◎.
⊂⊃	Roasting zone	Turn the hotplate selector clockwise to ⊂⊃. Select the power level. Switching off: Turn the hotplate selector to 0 and reset. Never turn the hotplate selector to 0 via ⊂⊃.

Notes

- Dark areas in the glow pattern of the hotplate are part of the technical design. This does not affect the functionality of the hotplate.
- The hotplate regulates the temperature by switching the heat on and off. The heat may also switch on and off when at the highest setting.
  - This protects easily damaged components from overheating.
  - The appliance is protected against electrical overload.
  - You achieve better cooking results.
- With multi-circuit hotplates, the heating of the inner filament circuits and the heating of the activations may switch on and off at different times.

Residual heat indicator

The hob has a residual heat indicator for each hotplate. It shows which hotplates are still hot. Even if the hob is switched off, the display lights up until the hotplate has cooled down sufficiently. Do not touch the hotplate while the residual heat indicator is lit up.

Tip: You can keep small dishes warm or melt cooking chocolate.

5.3 Control panels

You can use the control panel to configure all functions of your appliance and to obtain information about the operating status.

Controls

You can use the controls to configure all functions of your appliance and to obtain information about the operating status.

Control	Explanation
Function selector	Use the function selector to set the types of heating and other functions. You can turn the function selector clockwise or anticlockwise from the zero setting ○. Depending on the appliance, the function selector can be pushed in. Press on the function selector to click it into or out of the zero setting ○. → *"Types of heating and functions", Page 10*
Temperature selector	Use the temperature selector to set the temperature for the type of heating and select settings for other functions. You can only turn the temperature selector clockwise from the zero setting ● until it offers resistance. You cannot turn it any further than this. Depending on the appliance, the temperature selector can be pushed in. Press on the temperature selector to click it into or out of the zero setting ●. → *"Temperature and setting levels", Page 11*
Hotplate control	You can use the four hotplate switches to control the output provided by each individual hotplate. The symbol above each of the switches shows you which hotplate is set using that switch. → *"Hotplate selector", Page 11*

Types of heating and functions

To ensure that you always find the right type of heating to cook your food, we explain the differences and applications below.

Symbol	Type of heating	What it's used for and how it works
	3D hot air	Bake or roast on one or more levels. The fan distributes the heat from the ring-shaped heating element in the back wall evenly around the cooking compartment. This type of heating is used to determine the energy consumption in air recirculation mode and the energy efficiency class.
	Hot air gentle	Cook selected dishes gently on one level without preheating. The fan distributes the heat from the ring-shaped heating element in the back wall evenly around the cooking compartment. The food is cooked in phases using residual heat. Temperatures up to 200 °C are most suitable.
	Pizza setting	Cook pizza or food that requires a lot of heat from below. The bottom heating element and the ring-shaped heating element in the back wall heat the cooking compartment.
	Bottom heating	Final baking or cooking food in a bain marie. The heat is emitted from below.
	Full-surface grill	Grill flat items such as steak, sausages, or toast. Gratinate food. The entire area below the grill element becomes hot.
	Hot air grilling	Roast poultry, whole fish or large pieces of meat. The grill element and the fan switch on and off alternately. The fan circulates the hot air around the food.
	Top/bottom heating	Traditionally bake or roast on one level. This type of heating is especially suitable for cakes with moist toppings. The heat is emitted evenly from above and below. This type of heating is used to determine the energy consumption in the conventional mode.

Additional functions

Here, you can find an overview of other functions of your appliance.

Symbol	Function	Use
	Rapid heating	Rapidly preheat the cooking compartment without accessories. → *"Rapid heating", Page 14*
	Oven light	Light up the cooking compartment without heating.

Temperature and setting levels

There are different settings for the types of heating and functions.

Symbol	Function	Use
●	Zero setting	The appliance does not heat up.
50–275	Temperature range	Set the temperature in the cooking compartment in °C.
1, 2, 3 or I, II, III	Grill settings	Depending on the appliance type, set the grill settings for the grill, for the large area and grill, or for the small area. 1 = low 2 = medium 3 = high

Heat-up indicator

The appliance indicates when it is heating up.
When the appliance is heating, the indicator lamp above the temperature selector lights up. The light goes out during pauses in the heating.
When you preheat the appliance, the optimal time to place your food in the cooking compartment is when the indicator lamp first goes out.

Notes

- If the interior lighting function and a temperature are set, the heat-up indicator also lights up. The appliance does not heat up.
- If your appliance features the interior lighting function and when a temperature value is set, the heat-up indicator also lights up. The appliance does not heat up.
- Due to thermal inertia, the temperature that is displayed may differ slightly from the actual temperature inside the cooking compartment.

Hotplate selector

You can use the hotplate selector to adjust the heat setting of the hotplates.
If you activate the connections, the relevant displays light up.

Position	Function	Explanation
0	Zero setting	The hotplate is switched off.
1–9	Power levels	1 = lowest output 9 = highest output
◎	Switching on	Switch on the large dual-circuit hotplate.
⊂⊃	Switching on	Switch on the roasting zone.

5.4 Cooking compartment

The functions in the cooking compartment make your appliance easier to use.

Rails

The rails in the cooking compartment enable you to place accessories at different heights.
The cooking compartment has five shelf positions. The shelf positions are numbered from bottom to top.

You can remove the rails, e.g. for cleaning.
→ *"Rails", Page 17*

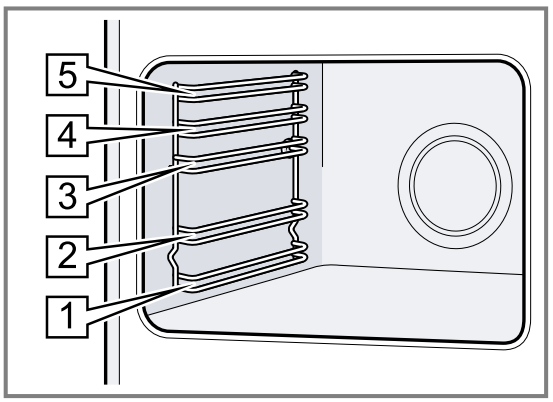

Cooling fan

The cooling fan switches on and off depending on the appliance's temperature. The hot air escapes above the door.

ATTENTION!

Do not cover the ventilation slot above the appliance door. The appliance overheats.

- Ensure that the ventilation slots are unobstructed.

To ensure that the appliance cools down more quickly after operation, the cooling fan continues to run for a certain period afterwards.

Appliance door

If you open the appliance door during operation, the operation continues.

Condensation

Condensation can occur in the cooking compartment and on the appliance door when cooking. Condensation is normal and does not adversely affect appliance operation. Wipe away the condensation after cooking.

6 Accessories

Use original accessories. These have been made especially for your appliance.

Note: Heat may deform the accessory. This deformation has no effect on the function. When the accessory cools down, it will regain its original shape.

The accessories supplied may differ depending on the appliance model.

Accessories		Use
Wire rack	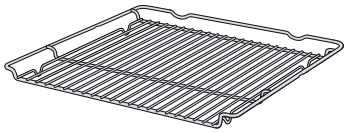	■ Baking tins ■ Ovenproof dishes ■ Cookware ■ Meat, e.g. roasting joints or steak ■ Frozen meals
Universal pan	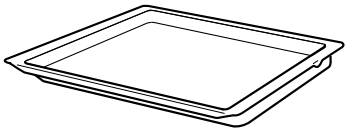	■ Moist cakes ■ Biscuits ■ Bread ■ Large roasts ■ Frozen meals ■ Catching dripping liquids, e.g. fat when grilling food on the wire rack.
Baking tray	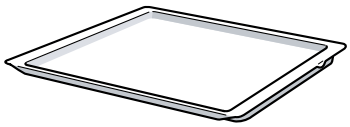	■ Tray bakes ■ Sponge cake, simple

6.1 Using the accessory

Always slide the accessory into the cooking compartment correctly. This is the only way that you can remove the accessory halfway without it tipping.

1. Insert the accessory between the two guide rods for a shelf position.

Wire rack	Insert the wire rack with the open side facing the appliance door and the curved lip ⌣ facing downwards.
Baking tray E.g. universal pan or baking tray	Slide the tray in with the sloping edge facing the appliance door.

2. Slide the accessory all the way in, making sure that the accessory does not touch the appliance door.

Note: Take any accessories that you will not be using out of the cooking compartment while the appliance is in operation.

6.2 Other accessories

You can purchase other accessories from our after-sales service, specialist retailers or online.
You will find a comprehensive range of products for your appliance in our brochures and online: www.bosch-home.com
Accessories vary from one appliance to another. When purchasing accessories, always quote the exact product number (E no.) of your appliance.
You can find out which accessories are available for your appliance in our online shop or from our after-sales service.

7 Before using for the first time

Configure the settings for initial start-up. Clean the appliance and accessories.

7.1 Cleaning the appliance before using it for the first time

Clean the cooking compartment and accessories before using the appliance to prepare food for the first time.

1. Remove the accessory and the leftover packaging, such as polystyrene pellets, from the cooking compartment.
2. Before heating, wipe the smooth surfaces in the cooking compartment with a soft, damp cloth.
3. Ventilate the room while the appliance is heating.
4. Set the type of heating and the temperature.
→ *"Basic operation", Page 14*

Type of heating	3D hot air
Temperature	Maximum
Cooking time	1 hour

5. Switch off the appliance after the specified cooking time.
6. Wait until the cooking compartment has cooled down.
7. Clean the smooth surfaces with soapy water and a dish cloth.
8. Clean the accessory with soapy water and a dish cloth or a soft brush.

8 Operating the hotplate

You can find out everything you need to know about operating your hotplate here.

8.1 Setting the hotplates

You can use the hotplate switch to adjust the heat output of the hotplate.

Power level	
1	Lowest level
9	Highest level

8.2 Recommended cooking settings

You can find an overview of different foods with appropriate heat settings here.
The cooking time will vary depending on the type, weight, thickness and quality of the food. The ongoing cooking setting depends on the cookware used.

Cooking tips

- To bring food to the boil, use heat setting 9.
- Stir thick liquids occasionally.
- Food that needs to be seared quickly or that initially loses a lot of liquid during frying should be fried in small portions.
- Tips for saving energy when cooking. → *Page 6*

Meal	**Ongoing cooking setting**	**Ongoing cooking time in minutes**
Melting		
Butter, gelatine	1	-
Heating or keeping warm		
Stew, e.g. lentil stew	1	-
Milk[1]	1-2	-

[1] Prepare the dish without the lid.
[2] Bring the water to the boil with the lid on.
[3] Continue to cook the dish without a lid.
[4] Turn the dish several times.

Meal	**Ongoing cooking setting**	**Ongoing cooking time in minutes**
Poaching or simmering		
Dumplings[2, 3]	3-4	20–30
Fish[2, 3]	3	10–15
White sauce, e.g. béchamel	1	3-6
Boiling, steaming or stewing		
Rice, with double the volume of water	3	15–30
Potato wedges	3-4	25–30
Boiled potatoes	3-4	15–20
Pasta, noodles[2, 3]	5	6–10
Stew, soup	3-4	15–60
Vegetables, fresh or frozen	3-4	10–20
Food in a pressure cooker	3-4	-
Braising		
Roulades	3-4	50–60
Pot roast	3-4	60–100
Goulash	3-4	50–60
Frying with little oil Cook food without a lid.		
Escalope, plain or breaded	6-7	6–10
Chop, plain or breaded[4]	6-7	8–12
Steak, 3 cm thick	7-8	8–12
Fish and fish fillet, plain or breaded	4-5	8–20
Fish or fish fillet, breaded and frozen, e.g. fish fingers	6-7	8–12
Stir fry, frozen	6-7	6–10

[1] Prepare the dish without the lid.
[2] Bring the water to the boil with the lid on.
[3] Continue to cook the dish without a lid.
[4] Turn the dish several times.

Meal	Ongoing cooking setting	Ongoing cooking time in minutes
Pancakes	5-6	-

[1] Prepare the dish without the lid.
[2] Bring the water to the boil with the lid on.
[3] Continue to cook the dish without a lid.
[4] Turn the dish several times.

9 Basic operation

9.1 Switching on the appliance

- ▸ Turn the function selector to any position other than the "Off" position ○.
- ✔ The appliance is switched on.

9.2 Switching off the appliance

- ▸ Turn the function selector to the "Off" position ○.
- ✔ The appliance is switched off.

9.3 Types of heating and temperature

1. Use the function selector to set the type of heating.
2. Use the temperature selector to set the temperature or grill setting.
- ✔ The appliance starts heating after a few seconds.
3. When the dish is ready, switch off the appliance.

Tip: The most suitable type of heating for your food can be found in the description of the types of heating.

Changing the type of heating

You can change the type of heating at any time.

- ▸ Use the function selector to set the required type of heating.

Changing the temperature

You can change the temperature at any time.

- ▸ Turn the temperature selector to set the desired temperature.

10 Rapid heating

To save time, you can use the rapid heating to shorten the preheat time.
Only use rapid heat-up when a temperature of over 100 °C has been set.
After rapid heating, it is best to use the following types of heating:

- 3D hot air
- Top/bottom heating

10.1 Setting rapid heating

To ensure an even cooking result, do not place the food in the cooking compartment until rapid heating has come to an end.

1. Use the function selector to select rapid heating.
2. Use the temperature selector to set the required temperature.
- ✔ Rapid heating starts after a few seconds.
- ✔ When the rapid heating process ends, the heat-up indicator goes out.
3. Use the function selector to set a suitable type of heating.
4. Place the food in the cooking compartment.

11 Cleaning and servicing

To keep your appliance working efficiently for a long time, it is important to clean and maintain it carefully.

11.1 Cleaning agent

To avoid damaging the different surfaces of the appliance, do not use unsuitable cleaning agents.

⚠ WARNING – Risk of electric shock!

An ingress of moisture can cause an electric shock.

- ▸ Do not use steam- or high-pressure cleaners to clean the appliance.

ATTENTION!

Unsuitable cleaning agents damage the surfaces of the appliance.

- ▸ Do not use aggressive or abrasive cleaning agents.
- ▸ Do not use cleaning products with a high alcohol content.
- ▸ Do not use hard scouring pads or cleaning sponges.
- ▸ Do not use any special cleaners if the appliance is still warm.

Using oven cleaner in a hot cooking compartment damages the enamel.

- ▸ Do not use oven cleaner in the cooking compartment when it is still warm.
- ▸ Remove all food remnants from the cooking compartment and the appliance door before you next heat up the appliance.

New sponge cloths contain residues from production.

- ▸ Wash new sponge cloths thoroughly before use.

Suitable cleaning agents

Only use cleaning agents that are suitable for the different surfaces on your appliance.

Follow the instructions on cleaning the appliance.
→ *"Cleaning the appliance", Page 16*

Appliance

Surface	Suitable cleaning agents	Information
Stainless steel	■ Hot soapy water ■ Special stainless steel cleaning products suitable for hot surfaces	To prevent corrosion, remove any limescale, grease, starch or albumin (e.g. egg white) stains on stainless steel fronts immediately. Apply a thin layer of the stainless steel cleaning product with a soft cloth.
Enamel, plastic, painted, and screen-printed surfaces E.g. control panel	■ Hot soapy water	Do not use glass cleaner or a glass scraper.
Knobs	■ Hot soapy water	Clean with a dish cloth and dry with a soft cloth. Do not remove or scrub.
Ceramic hob	■ Glass ceramic cleaner	Follow the cleaning instructions on the product packaging. Remove heavy soiling using a glass scraper.
Plinth drawer	■ Hot soapy water	Clean with a dishcloth.

Appliance door

Area	Suitable cleaning agents	Information
Door panels	■ Hot soapy water	Do not use a glass scraper or stainless steel wool. **Tip:** Remove the door panels in order to clean them thoroughly. → *"Appliance door", Page 18*
Door panel	■ Made of stainless steel: Stainless steel cleaner ■ Made of plastic: Hot soapy water	Do not use glass cleaner or a glass scraper. **Tip:** Remove the upper door panel for thorough cleaning. → *"Appliance door", Page 18*
Door handle	■ Hot soapy water	In order to avoid stubborn dirt, remove descaling agents from the door handle immediately.
Door seal	■ Hot soapy water	Do not remove or scrub.
Door lock	■ Hot soapy water	Clean with a dishcloth. Remove the child safety lock for cleaning. → *"Door lock", Page 7*

Cooking compartment

Area	Suitable cleaning agents	Information
Enamelled surfaces	■ Hot soapy water ■ Vinegar water ■ Oven cleaner	Soak any heavily soiled areas and use a brush or steel wool. Leave the appliance door open to dry the cooking compartment after cleaning it. **Notes** ■ Enamel burns at very high temperatures, causing minor discolouration. The functionality of your appliance is not affected by this. ■ The edges of thin baking trays cannot be completely enamelled and may be rough. This does not impair corrosion protection. ■ Food residues will leave a white coating on the enamel surfaces. The coating does not pose a health risk. The functionality of your appliance is not affected by this. Remove residues with lemon juice.
Glass cover on the oven light	■ Hot soapy water	Use oven cleaner to remove very heavy soiling.
Rails	■ Hot soapy water	Soak any heavily soiled areas and use a brush or steel wool. **Tip:** Remove the shelf supports for cleaning. → *"Rails", Page 17*
Accessories	■ Hot soapy water ■ Oven cleaner	Soak any heavily soiled areas and use a brush or steel wool. Enamelled accessories are dishwasher-safe.

11.2 Cleaning the appliance

In order to avoid damaging the appliance, clean your appliance only as specified, and using suitable cleaning products.

⚠ WARNING – Risk of burns!

The appliance and its parts that can be touched become hot during use.

- ▸ Caution should be exercised here in order to avoid touching heating elements.
- ▸ Young children under 8 years of age must be kept away from the appliance.

⚠ WARNING – Risk of fire!

Loose food remnants, fat and meat juices may catch fire.

- ▸ Before using the appliance, remove the worst of the food residues and remnants from the cooking compartment, heating elements and accessories.

Requirement: Read the information on cleaning agents.
→ *"Cleaning agent", Page 14*

1. Clean the appliance using hot soapy water and a dish cloth.
   – For some surfaces, you can use alternative cleaning agents.
   → *"Suitable cleaning agents", Page 15*
2. Dry with a soft cloth.

11.3 Cleaning controls

⚠ WARNING – Risk of electric shock!

An ingress of moisture can cause an electric shock.

- ▸ Do not detach the control knobs to clean them.
- ▸ Do not use wet sponge cloths.

1. Observe the information regarding the cleaning agents.
2. Clean using a damp sponge cloth and hot soapy water.
3. Dry with a soft cloth.

11.4 Potential stains

In order to avoid these stains, clean the hob with a damp dish cloth and dry it with a cloth.

Damage	Cause	Action
Stains	Limescale and water marks	Only clean the hob when it has cooled down sufficiently. You can use a cleaning agent suitable for glass-ceramic hobs.
Stains	Sugar, rice starch or plastic	Clean immediately. Use a glass scraper.

11.5 Cleaning the hob

Clean the hob after every use to stop cooking residues from getting burnt on.

Requirement: The hob must be cold.

1. Remove heavy soiling using a glass scraper.
2. Clean the hob with a cleaning product for glass ceramic.
   Follow the cleaning instructions on the packaging of the cleaning product.
   Tip: You can achieve good cleaning results using a special sponge for glass ceramic.

11.6 Cleaning the hob surround

If the hob frame is dirty or stained after use, clean this.

Note: Do not use a glass scraper.

1. Clean the hob frame with hot soapy water and a soft cloth.
   Wash new sponge cloths thoroughly before use.

2. Dry with a soft cloth.

12 Cleaning aid

The cleaning aid is a fast alternative for occasionally cleaning the cooking compartment. The cleaning aid evaporates soapy water and therefore softens dirt. This means that dirt can be removed more easily.

12.1 Setting the cleaning aid

⚠ WARNING – Risk of scalding!
If there is water in the cooking compartment when it is hot, this may create hot steam.
- ▸ Never pour water into the cooking compartment when the cooking compartment is hot.

Requirement: The cooking compartment must be cooled down completely.

1. Remove the accessories from the cooking compartment.
2. Add one drop of detergent to 0.4 l water and pour it onto the centre of the cooking compartment floor. Do not use distilled water.
3. Use the function selector to set the **Bottom heating** type of heating.
4. Use the temperature selector to set 80 °C.
5. Switch the appliance on for four minutes.
6. Switch off the appliance after four minutes and leave it to cool for approx. 20 minutes.

12.2 Cleaning the cooking compartment after using it

ATTENTION!
If the cooking compartment remains damp for too long, this results in corrosion.
- ▸ After using the cleaning aid, wipe the cooking compartment and allow it to dry completely.

Requirement: The cooking compartment has cooled down.

1. Open the appliance door and absorb the residual water with an absorbent sponge cloth.
2. Clean smooth surfaces in the cooking compartment with a dish cloth or a soft brush. Remove stubborn residues with a stainless steel spiral scourer.
3. Remove limescale deposits using a vinegar-soaked cloth. Wipe this away with clear water and use a soft cloth to also rub underneath the door seal dry.
4. Once the cooking compartment is sufficiently clean:
   - In order to cool the cooking compartment, leave the appliance door open in the detent position for approx. one hour.
   - To dry the cooking compartment more quickly, heat up the appliance with the door open with **3D hot air** and 50 °C for approx. five minutes.

13 Rails

To clean the rails and cooking compartment thoroughly, you can remove the shelf supports.

13.1 Unhooking the rails

⚠ WARNING – Risk of burns!
The rails can be very hot.
- ▸ Never touch the rails when they are hot.
- ▸ Allow the appliance to cool down.
- ▸ Keep children at a safe distance.

1. Hold the bottom of the shelf support and pull it slightly towards the front. Pull the extension pins in the lower section of the rails out of the mounting openings.

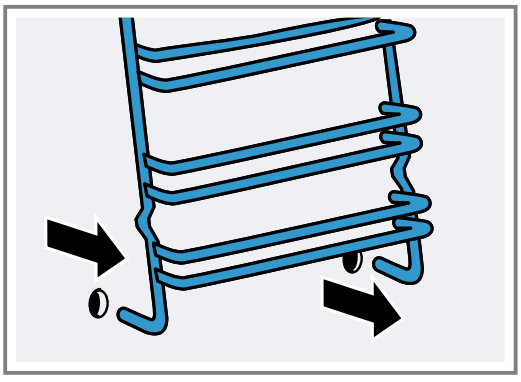

2. Pull the entire shelf support downwards first and then pull it forwards and remove it.

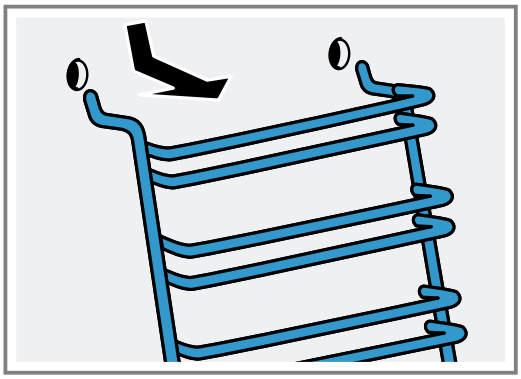

13.2 Attaching the rails

1. Place the two hooks at the top of the rail into the upper holes.

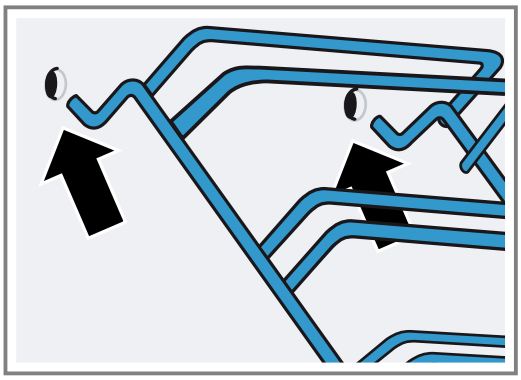

2. **ATTENTION!**
   Incorrect assembly
   - Never move the rail before the two hooks are secured fully in the upper holes. Otherwise the enamelled coating may be damaged and break.

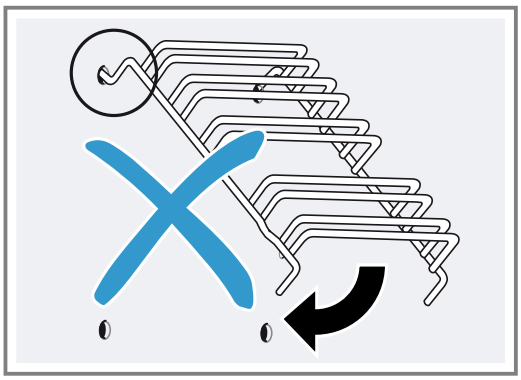

3. Both hooks must be inserted fully into the upper holes. Move the rail down slowly and carefully, and hook it into the lower holes.

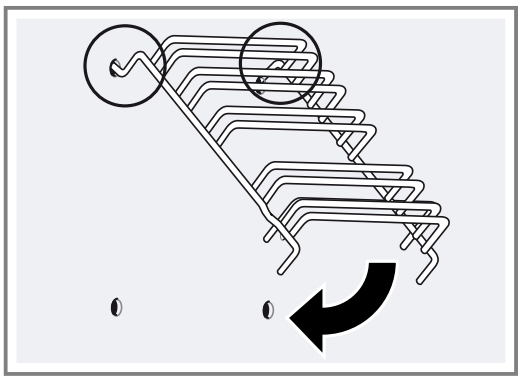

4. Hook both rails into the side walls of the oven.

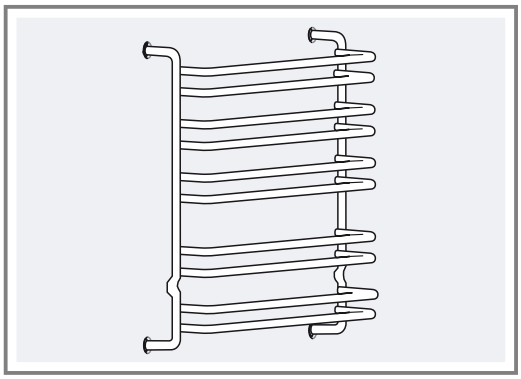

If the rails are fitted correctly, the distance between the two upper shelf positions is greater.

14 Appliance door

It is normally sufficient if you clean the outside of the appliance door. If the appliance door is very dirty on the inside and outside, you can remove the appliance door and clean it.

14.1 Door hinges

⚠ **WARNING – Risk of injury!**
When the hinges are not secured, they can snap shut with great force.
- If you open the appliance door, ensure that the locking levers are fully open or fully closed.

1. The oven door hinges each have a locking lever. When the locking levers are closed, the oven door is secured in place.

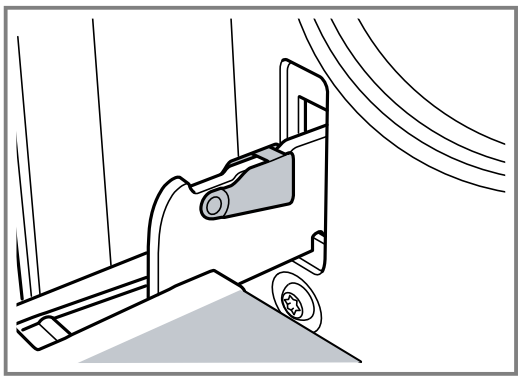

It cannot be detached.

2. When the locking levers are open in order to detach the oven door, the hinges are secured.

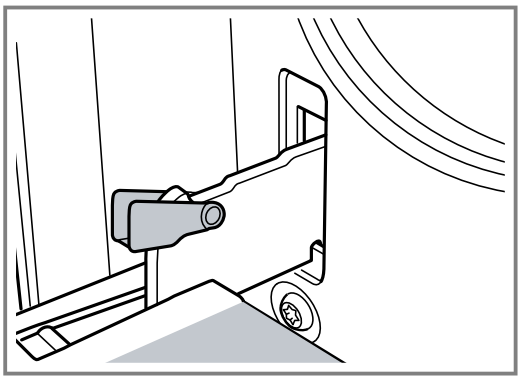

The hinges cannot snap shut.

14.2 Removing the appliance door

1. Open the oven door fully.
2. Open the locking levers on the left- and right-hand hinges.

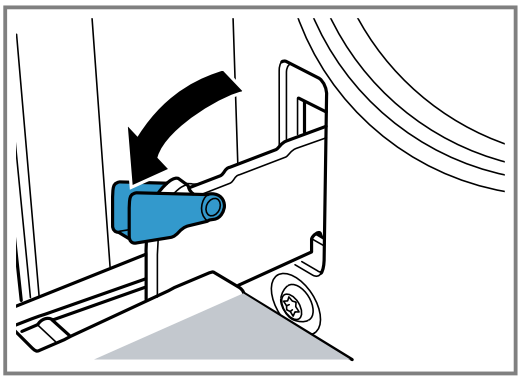

3. Close the oven door as far as the limit stop. Grip the left and right hand sides of the door with both hands. Close the door slightly more and remove it.

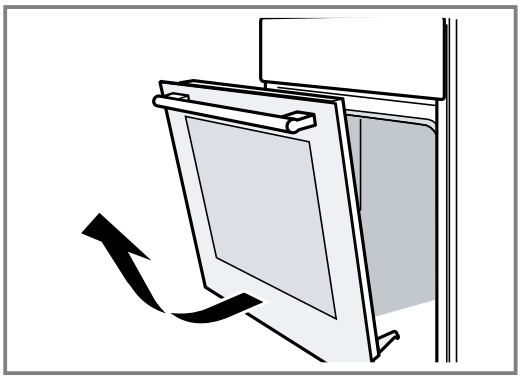

14.3 Removing the door panes

The glass panes of the oven door can be removed to make cleaning easier.

⚠ **WARNING – Risk of injury!**

Scratched glass in the appliance door may develop into a crack.

- Do not use any harsh or abrasive cleaners or sharp metal scrapers to clean the glass on the oven door, as they may scratch the surface.

The components in the appliance door may have sharp edges.

- Wear gloves.

1. Detach the oven door.
   → *"Removing the appliance door", Page 19*
2. Position it on a cloth with its handle pointing downwards.
3. To remove the upper cover of the oven door, press in the tabs on the left and right using your fingers. Pull out and remove the cover.

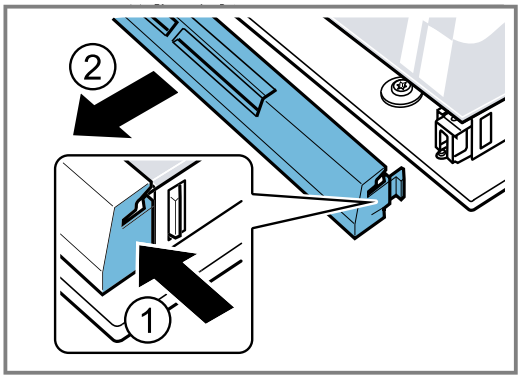

4. Lift the top pane up and out.

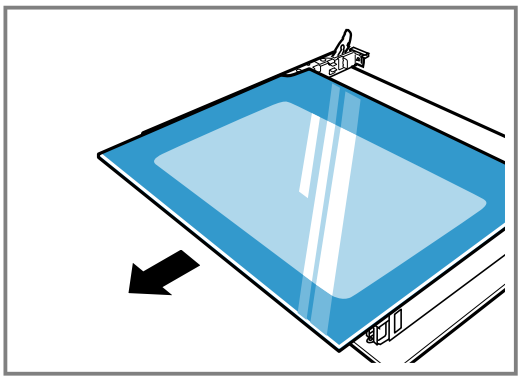

5. Lift the panel up and out.

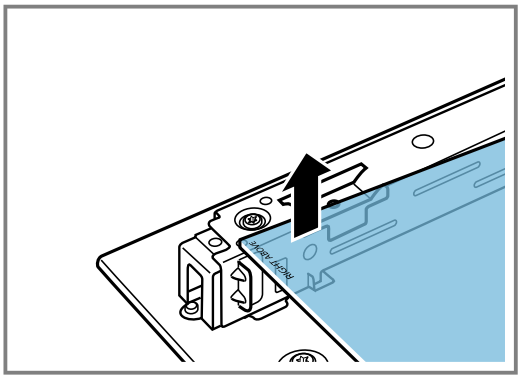

14.4 Fitting the door panes

When fitting the panes, ensure that the lettering "top right" is not upside down at the bottom left.

1. Insert the pane diagonally towards the back.

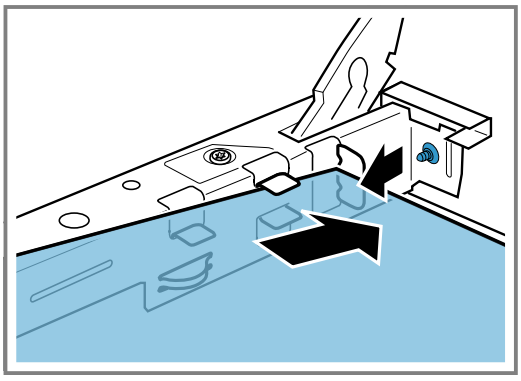

2. Hold the top pane in both brackets and insert it at an angle towards the back.

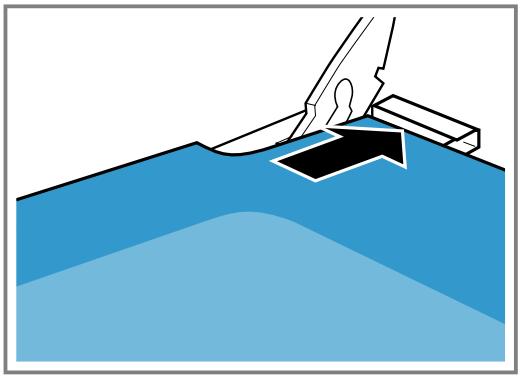

   Push the pane into both openings on the underside. The smooth surface of the pane must face outwards.
3. Place the cover at the top of the oven door and press it on.
   The mounting brackets must lock in place on both sides.
4. Attach the oven door.
   → *"Attaching the appliance door", Page 20*

Note: Only use the oven once the glass panes have been correctly fitted.

14.5 Attaching the appliance door

Reattach the oven door in the reverse sequence to removal.

⚠ **WARNING – Risk of injury!**

The oven door might accidentally fall or a hinge may suddenly snap shut.

- In this case, do not hold onto the hinge. Call customer service.

1. When attaching the oven door, ensure that both hinges are inserted in the opening direction.

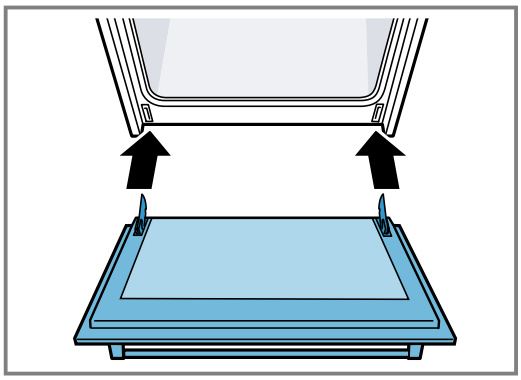

2. The notch on the hinge must engage on both sides.

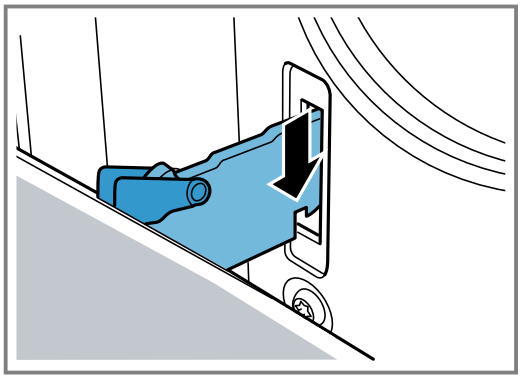

3. Close both locking levers again.

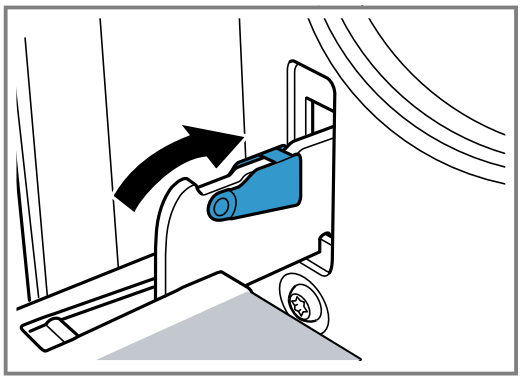

4. Close the appliance door.

14.6 Additional door safety

Additional safety devices have been fitted to prevent contact with the oven doors. Always attach these safety devices when children could come near the oven. You can purchase this special accessory from after-sales service. 11023590

⚠ **WARNING – Risk of burns!**

During long cooking times, the oven door may become very hot.

- Supervise small children when the oven is in operation.

15 Troubleshooting

You can rectify minor faults on your appliance yourself. Read the troubleshooting information before contacting after-sales service. This will avoid unnecessary costs.

⚠ WARNING – Risk of injury!
Improper repairs are dangerous.
- ▸ Repairs to the appliance should only be carried out by trained specialist staff.
- ▸ If the appliance is defective, call Customer Service.

⚠ WARNING – Risk of electric shock!
Incorrect repairs are dangerous.
- ▸ Repairs to the appliance should only be carried out by trained specialist staff.
- ▸ Only use genuine spare parts when repairing the appliance.
- ▸ If the power cord of this appliance is damaged, it must be replaced by the manufacturer, the manufacturer's Customer Service or a similarly qualified person in order to prevent any risk.

15.1 Malfunctions

Fault	Cause and troubleshooting
The appliance is not working.	The mains plug of the power cord is not plugged in. ▸ Connect the appliance to the power supply.
	The circuit breaker in the fuse box has tripped. ▸ Check the circuit breaker in the fuse box.
	There has been a power cut. ▸ Check whether the lighting in your kitchen or other appliances are working.

15.2 Replacing the oven light bulb

If the light in the cooking compartment fails, change the oven light bulb.

Note: Heat-resistant, 25-watt, 230 V halogen bulbs are available from the after-sales service or specialist retailers. Only use these bulbs. Hold the new halogen bulbs only with a clean, dry towel. This increases the service life of the bulb.

⚠ WARNING – Risk of burns!
The appliance and its parts that can be touched become hot during use.
- ▸ Caution should be exercised here in order to avoid touching heating elements.
- ▸ Young children under 8 years of age must be kept away from the appliance.

⚠ WARNING – Risk of electric shock!
When changing the bulb, the bulb socket contacts are live.
- ▸ Before replacing the bulb, ensure that the appliance is switched off in order to prevent a potential electric shock.
- ▸ Also unplug the appliance from the mains or switch off the circuit breaker in the fuse box.

Requirements
- ■ The appliance is disconnected from the power supply.
- ■ The cooking compartment has cooled down.
- ■ You have a new halogen bulb to replace the old one.

1. Place a tea towel in the cooking compartment to prevent damage.
2. Turn the glass cover anti-clockwise to remove it.
3. Pull out the halogen bulb without turning it.

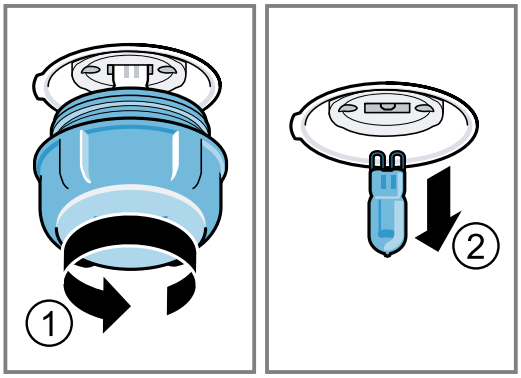

4. Insert the new halogen bulb and press it firmly into the socket.
   Make sure the pins are positioned correctly.
5. Depending on the appliance model, the glass cover may have a sealing ring. Attach the sealing ring.
6. Screw in the glass cover.
7. Remove the tea towel from the cooking compartment.
8. Connect the appliance to the power supply.

16 Transportation and disposal

You can find out here how to prepare your appliance for transportation. You will also find out how to dispose of old appliances.

16.1 Disposing of old appliance

Valuable raw materials can be reused by recycling.

- Dispose of the appliance in an environmentally friendly manner.
  Information about current disposal methods are available from your specialist dealer or local authority.



This appliance is labelled in accordance with European Directive 2012/19/EU concerning used electrical and electronic appliances (waste electrical and electronic equipment - WEEE).
The guideline determines the framework for the return and recycling of used appliances as applicable throughout the EU.

16.2 Transporting the appliance

Keep the original appliance packaging. Only transport the appliance in the original packaging. Observe the transport arrows on the packaging.

1. Secure all moving parts in and on the appliance using adhesive tape that can be removed without leaving any traces.
2. Slide all accessories, such as baking trays, into the corresponding slots with thin cardboard at the edges, in order to avoid damaging the appliance.
3. Place cardboard or similar between the front and rear side to prevent knocks against the inside of the door glass.
4. Secure the door and, if available, the top cover to the appliance sides using adhesive tape.

If the original packaging is no longer available

1. In order to guarantee sufficient protection against any transport damage, pack the appliance in protective packaging.
2. Always transport the appliance upright.
3. Do not hold the appliance by the door handle or the connections on the rear, as these could be damaged.
4. Do not place any heavy objects on the appliance.

17 Customer Service

If you have any queries on use, are unable to rectify faults on the appliance yourself or if your appliance needs to be repaired, contact Customer Service. Function-relevant genuine spare parts according to the corresponding Ecodesign Order can be obtained from Customer Service for a period of at least 10 years from the date on which your appliance was placed on the market within the European Economic Area.

Note: Under the terms of the manufacturer's warranty the use of Customer Service is free of charge.

Detailed information on the warranty period and terms of warranty in your country is available from our after-sales service, your retailer or on our website.
If you contact Customer Service, you will require the product number (E-Nr.) and the production number (FD) of your appliance.

The contact details for Customer Service can be found in the enclosed Customer Service directory or on our website.
This product contains light sources from energy efficiency class G.

17.1 Product number (E-Nr.) and production number (FD)

You can find the product number (E-Nr.) and the production number (FD) on the appliance's rating plate. You will see the rating plate with these numbers if you open the appliance door.
Make a note of your appliance's details and the Customer Service telephone number to find them again quickly.

18 How it works

Here, you can find the ideal settings for various types of food as well as the best accessories and cookware. These recommendations are perfectly tailored to your appliance.

18.1 Proceed as follows:

Note:
If you are using the appliance for the first time, follow this important information:

- → *"Safety", Page 2*
- → *"Saving energy", Page 6*
- → *"Preventing material damage", Page 5*

1. Select a suitable type of food from the overview of food.
   Note: If you do not find the exact food or application that you want to prepare or implement, look for a similar dish and take the general information into consideration.
2. Remove any accessories from the cooking compartment.
3. Select suitable cookware and accessories.

Use the cookware and the accessory listed in the recommended settings.

4. Only preheat the appliance if the recipe or the recommended settings tell you to do so.
5. Use the recommended settings when configuring the appliance settings.
6. ⚠ **WARNING – Risk of scalding!**
   Hot steam may escape when you open the appliance door. Steam may not be visible, depending on the temperature.
   - ▸ Open the appliance door carefully.
   - ▸ Keep children at a safe distance.

   When the dish is ready, switch off the appliance.

18.2 Condensation

This section tells you how condensation is formed, how you can prevent damage, and how you can prevent condensation from forming.
When you are cooking food in the cooking compartment, a lot of steam may form in the cooking compartment. Since your appliance is extremely energy-efficient, only a small amount of heat escapes during operation. Due to the significant differences in temperature between the appliance interior and the external parts of the appliance, condensation may build up on the appliance door, the control panel or the front panels of adjacent kitchen cabinets. The formation of condensation is a normal physical phenomenon.
In order to prevent damage, wipe away the condensation.
When you preheat the appliance, you reduce the build-up of condensation.

18.3 Good to know

Observe this information when preparing food.

- The temperature and cooking time depend on the amount of food and the recipe. Settings ranges are specified for this reason. Select lower values first and, if required, select higher values the next time. Cooking times cannot be reduced by using higher temperatures. Doing this would mean that the food would only be cooked on the outside, and would not be fully cooked in the middle.
- The setting values apply to food placed in the cooking compartment while the cooking compartment is still cold. You can cut your energy use by up to 20%.
  It is not usually necessary to preheat the appliance. If you would like to preheat the oven anyway, you can reduce the indicated baking times by a few minutes.
  Preheating is required for some types of food. Do not place accessories into the cooking compartment until it has finished preheating.
- Remove any accessories that are not being used from the cooking compartment. This allows you to achieve optimal cooking results and save up to 20% in energy.
- Only use original accessories.
  The original accessory has been tailored to the cooking compartment and the types of heating. Ensure that the accessory slides in the right way round.

Greaseproof paper

Only use greaseproof paper that is suitable for the selected temperature. Always cut the greaseproof paper to size.

⚠ **WARNING – Risk of fire!**
Opening the appliance door creates a draught. Greaseproof paper may come into contact with the heating element and catch fire.

- ▸ Never place greaseproof paper loosely over accessories when preheating the appliance and while cooking.
- ▸ Always cut greaseproof paper to size and use a plate or baking tin to hold it down.

18.4 Notes on baking

When baking, use the shelf positions indicated.

Baking on one level	**Shelf position**
Rising pasta/baked goods or tin on the wire rack	2
Flat pasta/baked items or in the baking tray	2–3

Baking on two or more levels	**Shelf position**
Universal pan Baking tray	3 1
Baking tins on the wire rack: First wire rack Second wire rack	Shelf position 3 1

Baking on three levels	**Shelf position**
Baking trays Universal pan Baking trays	5 3 1

Notes

- When baking on several layers, use hot air. Different food that is placed in the oven at the same time will not necessarily be ready at the same time.
  In such cases, you can remove the cooked food and continue to cook the other baking tray. If necessary, you can change the position and direction of the baking trays.
- Position baking tins/dishes either next to one another or offset on different shelves so that they are not directly one above the other in the cooking compartment. You can cut energy use by cooking different items at the same time.
- For best results, we recommend using dark-coloured metal baking tins.

18.5 Cakes and other baked goods

Recommended settings for cakes and baked items
The temperature and baking time depend on the quantity and consistency of the dough. This is why temperature ranges are given in the tables. Set a short cooking

time first. If required, set a longer cooking time next time. A lower temperature results in more even browning.

Baking tips

We have compiled a few tips to help you achieve a good baking result.

Topic	Tip
You want your cake to rise evenly.	■ Only grease the base of the springform cake tin. ■ After baking, use a knife to carefully loosen the cake from the baking tin.
You do not want small baked goods to stick to each other when baking.	Leave a minimum clearance of 2 cm around each item that is to be baked. This allows enough space for the baked goods to expand and brown on all sides.
Determine whether the cake is ready.	Push a cocktail stick into the highest point on the cake. If the cocktail stick comes out clean, the cake is ready.
You want to bake according to your own recipe.	Use similar items in the baking tables as a guide.
Use bakeware made of silicone, glass, plastic or ceramic.	■ The baking tin must be heat-resistant up to 250 °C. ■ Cakes in these types of bakeware brown less.

Recommended settings

Cakes in tins

Meal	Accessory/cookware	Shelf position	Type of heating	Temperature in °C	Cooking time, minutes
Sponge cake, simple	Vienna ring tin/loaf tin	2		160–180	50–60
Sponge cake, simple, 2 levels	Vienna ring tin/loaf tin	3+1		140–160	60–80
Sponge cake, delicate	Vienna ring tin/loaf tin	2		150–170	60–80
Sponge flan base	Flan base tin	3		160–180	30–40
Fruit tart or cheesecake with shortcrust pastry base	Springform cake tin, diameter 26 cm	2		160–180	70–90
Strudel	Tart dish or tin	1		200–240	25–50
Pie	Springform cake tin Ø 28 cm	2		160–180	25–35
Sponge cake	Bundt cake tin	2		150–170	60–80
Sponge flan, 3 eggs	Springform cake tin, diameter 26 cm	2		160–170	30–40
Sponge flan, 6 eggs	Springform cake tin Ø 28 cm	2		160–170	35–45

Tray bakes

Meal	Accessory/cookware	Shelf position	Type of heating	Temperature in °C	Cooking time, minutes
Sponge cake with topping	Universal pan	3		160–180	20–45
Sponge cake, 2 levels	Universal pan + Baking tray	3+1		140–160	30–55
Shortcrust tart with dry topping	Universal pan	2		170–190	25–35
Shortcrust tart with dry topping, 2 levels	Universal pan + Baking tray	3+1		160–170	35–45

[1] Preheat the appliance.

Meal	Accessory/cookware	Shelf position	Type of heating	Temperature in °C	Cooking time, minutes
Shortcrust tart with moist topping	Universal pan	2		160–180	60–90
Yeast cake with dry topping	Universal pan	3		170–180	25–35
Yeast cake with dry topping, 2 levels	Universal pan + Baking tray	3+1		150–170	20–30
Yeast cake with moist topping	Universal pan	3		160–180	30–50
Yeast cake with moist topping, 2 levels	Universal pan + Baking tray	3+1		150–170	40–65
Plaited loaf, plaited ring	Universal pan	2		160–170	35–40
Swiss roll	Universal pan	2		170–190[1]	15–20
Strudel, sweet	Universal pan	2		190–210	55–65
Strudel, frozen	Universal pan	3		180–200	35–45

[1] Preheat the appliance.

Small yeast cakes

Meal	Accessory/cookware	Shelf position	Type of heating	Temperature in °C	Cooking time, minutes
Muffins	Muffin tray on wire rack	2		170–190	20–40
Muffins, 2 levels	Muffin tray on wire rack	3+1		160–170	30–40
Small baked items	Universal pan	3		150–170	25–35
Viennese whirls, 2 levels	Universal pan + Baking tray	3+1		150–170	25–40
Puff pastry	Universal pan	3		180–200	20–30
Puff pastry, 2 levels	Universal pan + Baking tray	3+1		180–200	25–35
Puff pastry, 3 levels	2x Baking tray + Universal pan	5+3+1		170–190	30–45
Choux pastry, e.g. profiteroles, eclairs	Universal pan	3		190–210	35–50
Choux pastry, 2 levels, e.g. profiteroles, eclairs	Universal pan + Baking tray	3+1		190–210	35–45

Biscuits

Meal	Accessory/cookware	Shelf position	Type of heating	Temperature in °C	Cooking time, minutes
Viennese whirls	Universal pan	3		140-150[1]	30-40
Viennese whirls, 2 levels	Universal pan + Baking tray	3+1		140–150[1]	30–45

[1] Preheat the appliance for 5 minutes. For appliances with the rapid heating function, do not use this function for preheating.

Meal	Accessory/cookware	Shelf position	Type of heating	Temperature in °C	Cooking time, minutes
Viennese whirls, 3 levels	2x Baking tray + Universal pan	5+3+1		130–140[1]	40–55
Biscuits	Universal pan	3		140–160	20–30
Biscuits, 2 levels	Universal pan + Baking tray	3+1		130–150	25–35
Biscuits, 3 levels	2x Baking tray + Universal pan	5+3+1		130–150	30–40
Meringues	Universal pan	3		80-100	100-150
Meringues, 2 levels	Universal pan + Baking tray	3+1		90-100	100-150
Coconut macaroons	Universal pan	2		100-120	30-40
Coconut macaroons, 2 levels	Universal pan + Baking tray	3+1		100-120	35-45
Coconut macaroons, 3 levels	x 2 Baking tray + Universal pan	5+3+1		100-120	40-50
Viennese whirls	Universal pan	3		180–200	25–35

[1] Preheat the appliance for 5 minutes. For appliances with the rapid heating function, do not use this function for preheating.

Tips for next time you bake

If something goes wrong when baking, you can find some tips here.

Topic	Tip
Your cake collapses.	■ Note the ingredients and preparation instructions that are given in the recipe. ■ Use less liquid. Or: ■ Reduce the baking temperature by 10 °C and increase the baking time.
Your cake is too dry.	Increase the baking temperature by 10 °C and shorten the baking time.
Your cake is generally too light in colour.	■ Check the shelf position and accessory. ■ Increase the baking temperature by 10 °C. Or: ■ Increase the baking time.
Your cake is too light on top and too dark underneath.	Place the cake one level higher in the cooking compartment.
Your cake is too dark on top and too light underneath.	■ Place the cake one level lower in the cooking compartment. ■ Reduce the baking temperature and increase the baking time.
Your cake is unevenly browned.	■ Reduce the baking temperature. ■ Cut the greaseproof paper to a suitable size. ■ Position the baking tin in the centre. ■ Shape small baked goods to be the same size and thickness.

Topic	Tip
Your cake is cooked on the outside but is not fully baked through on the inside.	■ Reduce the baking temperature and increase the baking time. ■ Add less liquid. For cakes with a moist topping: ■ Pre-bake the base. ■ Sprinkle the baked base with almonds or breadcrumbs. ■ Place the topping on the base.
The cake will not come out of the tin when turned upside down.	■ Allow the cake to cool for 5–10 minutes after baking. ■ Use a knife to carefully loosen the edge of the cake. ■ Turn the cake tin upside down again and cover it several times with a cold, wet cloth. ■ Next time you bake, grease the baking tin/ dish and sprinkle it with breadcrumbs.

18.6 Bread and bread rolls

The values for bread dough apply to both dough placed on a tray and dough placed in a loaf tin.

ATTENTION!

When the cooking compartment is hot, any water inside it will create steam. The change in temperature may cause damage.

- ▸ Never pour water into the cooking compartment when it is still hot.
- ▸ Never place cookware containing water on the cooking compartment floor.

Recommended settings

Bread and bread rolls

Meal	Accessory/cookware	Shelf position	Type of heating	Temperature in °C	Cooking time, minutes
Bread, 750 g, in a loaf tin or free-form	Universal pan or Loaf tin	2		180–200	50–60
Bread, 1000 g, in a loaf tin or free-form	Universal pan or Loaf tin	2		200–220	35–50
Bread, 1500 g, in a loaf tin or free-form	Universal pan or Loaf tin	2		180–200	60–70
Flatbread	Universal pan	3		240–250	25–30
Flatbread, frozen[1]	Universal pan	2		200–220[2]	10–25
Bread rolls, sweet, fresh	Universal pan	3		170–180[2]	20–30
Bread rolls, sweet, fresh, 2 levels	Universal pan + Baking tray	3+1		160–180[2]	15–25
Bread rolls, fresh	Universal pan	3		200–220	20–30
Toast with topping, x 4	Wire rack	3		200–220	15–20
Toast with topping, x 12	Wire rack	3		220–240	15–25

[1] The cooking process must take place on the appliance baking tray.
[2] Preheat the appliance.

18.7 Pizza, quiche and savoury cakes

Here, you can find information about pizza, quiche and savoury cakes.

Recommended settings

Pizza, quiche and savoury cakes

Meal	Accessory/cookware	Shelf position	Type of heating	Temperature in °C	Cooking time, minutes
Pizza, fresh	Universal pan	3		170–190	20–30
Pizza, fresh, 2 levels	Universal pan + Baking tray	3+1		160–180	35–45
Pizza, fresh, thin-crust	Universal pan	2		250–270[1]	20–30
Pizza, chilled	Universal pan	1		180–200[1]	10–15
Pizza, frozen, thin-crust, x 1	Wire rack	2		190–210	15–20
Pizza, frozen, thin base, x 2	Universal pan + Wire rack	3+1		190–210	20–25
Pizza, frozen, deep-pan, x 1	Wire rack	3		180–200	20–25
Pizza, frozen, deep-pan, x 2	Universal pan + Wire rack	3+1		170–190	20–30
Mini pizzas, frozen	Universal pan	3		190–210	10–20
Savoury bakes in a tin	Springform cake tin Ø 28 cm	2		170–190	40–50
Quiche, flan	Tart dish or tin	2		190–210	35–45
Pierogi	Ovenproof dish	2		170–190	55–65
Empanadas	Universal pan	3		180–190	35–45
Börek	Universal pan	3		190–210	25–35

[1] Preheat the appliance.

18.8 Bakes and gratins

How well cooked the bake is will depend on the size of the ovenware and the thickness of the bake.
Use wide, shallow cookware for bakes and gratins.
Food takes longer to cook in deep, narrow cookware and it browns more on top.
You can prepare food in baking tins or in the universal pan.

- Baking tins on the wire rack: Shelf position 2
- Universal pan: Shelf position 2

You can cut energy use by cooking different items at the same time. Position baking tins next to one another in the cooking compartment.

⚠ WARNING – Risk of injury!

If hot glass cookware is placed on a wet or cold surface, the glass may shatter.

- ▸ Place hot glass ovenware on a dry mat after cooking.

Recommended settings

Bakes and gratins

Meal	Accessory/cookware	Shelf position	Type of heating	Temperature in °C	Cooking time, minutes
Bake, savoury, fresh, cooked ingredients	Ovenproof dish	2		200–220	30–60
Bake, sweet	Ovenproof dish	2		180–200	50–60

Meal	Accessory/cookware	Shelf position	Type of heating	Temperature in °C	Cooking time, minutes
Potato gratin, raw ingredients, 4 cm deep	Ovenproof dish	2		150–170	60–80
Potato gratin, raw ingredients, 4 cm deep, on 2 levels	Ovenproof dish	3+1		150–160	70–80

18.9 Poultry, meat and fish

The table lists values for poultry, meat and fish, with default values for the weight.
If you prepare dishes that are larger or heavier than what is specified in the recommended settings, always use the lower temperature. If cooking more than one item, use the weight of the heaviest item as a basis for determining the cooking time. The individual pieces must be approximately the same size.

Roasting and grilling on the wire rack

Roasting on the wire rack works particularly well for large poultry or for multiple pieces at the same time.
- Depending on the size and type of the food to be roasted, add up to 1/2 litre water to the universal pan.
  You can make a sauce from the juices that are collected. This also means that less smoke is produced and the cooking compartment does not become as dirty.
- Keep the appliance door closed when using the grill.
  Never grill with the appliance door open.
- Place the food to be grilled on the wire rack. In addition, slide the universal pan in at least one shelf position lower, with the slanted edge facing the appliance door. This means that any dripping fat is caught.

Roasting in cookware

If you cook food in cookware, you can remove it from the cooking compartment more easily and serve it directly in the cookware. If you cover the cookware when you cook your food, this will keep the cooking compartment cleaner.

General information about roasting in cookware

- Use heat-resistant, ovenproof cookware.
- Place the cookware onto the wire rack.
- Check in advance whether the cookware fits in the cooking compartment.
- Glass cookware is best.
- Shiny roasting dishes made from stainless steel or aluminium are not ideal. They reflect the heat like a mirror. The food cooks more slowly and does not brown as well. Increase the temperature accordingly and extend the cooking time.
- Follow the manufacturer's instructions for your roasting dishes.

Cookware without lid

- Use a deep roasting dish.
- Place the cookware onto the wire rack.
- If you do not have any suitable cookware, use the universal pan.

Cookware with lid

- Use a suitable lid that seals well.
- Place the cookware onto the wire rack.
- Meat, poultry and fish can also become crispy in a covered roasting dish. Use a roasting dish with a glass lid for this. Select a higher temperature.

⚠ WARNING – Risk of injury!
If hot glass cookware is placed on a wet or cold surface, the glass may shatter.
- ▸ Place hot glass ovenware on a dry mat after cooking.

⚠ WARNING – Risk of scalding!
Very hot steam may escape when the lid is opened after cooking. Steam may not be visible, depending on the temperature.
- ▸ Lift the lid in such a way that the hot steam can escape away from you.
- ▸ Keep children away from the appliance.

Notes on roasting and grilling

The setting values are based on the assumption that unstuffed, chilled, ready-to-roast poultry, meat or fish is placed into a cold cooking compartment.
- The larger the poultry, meat or fish, the lower the temperature and the longer the cooking time.
- Turn the poultry, meat or fish after approx. 1/2 to 2/3 of the time listed.
- Add a little liquid to the poultry in the cookware. Cover the base of the cookware with approx. 1–2 cm of liquid.
- When you turn poultry, ensure that the breast side or skin side is underneath to begin with.
- Use tongs to turn the pieces of food you are grilling. If you pierce the meat with a fork, the juices will run out and it will become dry.
- Only add salt to steaks once they have been grilled. Salt draws water from the meat.

Tips for poultry, meat and fish

Observe the instructions when preparing poultry, meat and fish

Poultry

- For duck or goose, pierce the skin on the underside of the wings. This allows the fat to drain out.
- If using duck breast, score the skin. Do not turn duck breasts.
- Poultry will turn out particularly crispy and brown if you baste it towards the end of the roasting time with butter, salted water or orange juice.

Meat

- Coat lean meat with fat as required, or separate the pieces.

- When roasting, add a little liquid if the meat is lean. Cover the base of the glass cookware with approx. 1/2 cm of liquid.
- Score the rind crosswise. If you turn the joint when cooking it, ensure that the rind is underneath to begin with.
- When the joint is ready, turn off the oven and allow it to rest for a further 10 minutes in the cooking compartment, keeping the door closed. This helps distribute the meat juices more evenly. Wrap the joint in aluminium foil if necessary. The resting time is not included in the specified cooking time.
- It is more convenient to roast and braise meat in the cookware. You can take the joint out of the cooking compartment more easily in the cookware, and prepare the sauce in the cookware itself.
- The quantity of liquid depends on the type of meat, the material the cookware is made from and on whether or not a lid is used. If you are cooking meat in an enamelled or dark-coloured metal roasting dish, it will need a little more liquid than if cooked in glass cookware.
- The liquid in the cookware evaporates as the meat roasts. Carefully pour in more hot liquid if required.
- The distance between the meat and the lid must be at least 3 cm. The meat may expand.
- To braise the meat, sear it first as required. Add water, wine, vinegar or similar for the braising liquid. The base of the cookware must be covered with 1–2 cm of liquid.

Fish

- You do not need to turn whole fish.
- Place the whole fish into the cooking compartment in swimming position with the dorsal fin facing upwards.
- Placing half a potato or a small ovenproof container in the stomach cavity of the fish provides stability.
- You can tell when the fish is cooked because the dorsal fin can be removed easily.
- When stewing, add two to three tablespoons of liquid and a little lemon juice or vinegar into the cookware.

Tips for roasting and braising

Use these tips for good results when roasting and braising.

Topic	Tip
Lean meat must not dry out.	■ Coat lean meat with fat or oil as required or cover it with strips of bacon.
If you want to cook a joint with rind, proceed as follows:	■ Score the rind in a criss-cross pattern. ■ Roast the joint with the rind facing down first.
Keep the cooking compartment as clean as possible.	■ Cook the food in a covered roasting dish at a higher temperature. Or: ■ Use the grill tray. If required, the grill tray can be bought later as an optional accessory.
You want the meat (e.g. roast beef) to remain hot and succulent.	■ When the roast is ready, switch off the oven and leave the meat to rest for 10 minutes in the cooking compartment with the door closed. This helps distribute the meat juices more evenly. The resting time is not included in the specified cooking time. ■ After preparing it, wrap the food in aluminium foil.

Recommended settings

Poultry

Food	Accessories/cookware	Shelf position	Type of heating	Temperature in °C/grill setting	Cooking time in mins
Chicken, 1.3 kg, unstuffed	Cookware without lid	2		200–220	60–70
Small chicken portions, 250 g each	Cookware without lid	3		220–230	30–35
Chicken goujons, nuggets, frozen	Universal pan	3		190–210	20–25
Duck, unstuffed, 2 kg	Cookware without lid	2		190–210	100–110
Duck breast, 300 g each, medium	Cookware without lid	3		240–260	30–40
Goose, unstuffed, 3 kg	Cookware without lid	2		170–190	120–140
Goose legs, 350 g each	Cookware without lid	3		220–240	40–50
Small turkey, 2.5 kg	Cookware without lid	2		180–200	80–100
Turkey breast, boned, 1 kg	Cookware with lid	2		240–260	80–100
Turkey thigh, on the bone, 1 kg	Cookware without lid	2		180–200	90–100

Meat

Food	Accessories/cookware	Shelf position	Type of heating	Temperature in °C/grill setting	Cooking time in mins
Joint of pork without rind, e.g. neck, 1.5 kg	Cookware without lid	1		180–200	140–160
Joint of pork with rind, e.g. shoulder, 2 kg	Cookware without lid	1		170–190	190–200
Pork tenderloin steak, 1.5 kg	Cookware with lid	2		190–210	130–140
Pork steaks, 2 cm thick	Wire rack	4		3	20–25[1]
Fillet of beef, medium, 1 kg	Cookware without lid	3		210–220	45–55
Pot-roasted beef, 1.5 kg	Cookware with lid	2		200–220	100–120[2]
Sirloin, medium, 1.5 kg	Cookware without lid	2		200–220	60–70
Hamburger, 3–4 cm thick	Wire rack	4		3[3]	25–30[1]
Joint of veal, 1.5 kg	Cookware without lid	2		180–200	120–140
Knuckle of veal, 1.5 kg	Cookware with lid	2		210–230	130–150
Leg of lamb, boned, medium, 1.5 kg	Cookware without lid	2		170–190	70–80[4]
Saddle of lamb on the bone, medium, 1.5 kg	Cookware without lid	2		180–190	45–55[4]
Grilled sausages	Wire rack	3		3	20–25[1]
Meat loaf, 1 kg	Cookware without lid	2		170–180	70–80

[1] Slide the universal pan underneath the wire rack.
[2] At the start, add liquid to the cookware so that at least 2/3 of the joint is covered in liquid
[3] Turn the dish 2/3 of the way through the cooking time.
[4] Do not turn the food. Cover the base with water.

Fish

Food	Accessories/cookware	Shelf position	Type of heating	Temperature in °C/grill setting	Cooking time in mins
Fish, grilled, whole, 300 g, e.g. trout	Wire rack	2		2	20–25[1]
Fish, grilled, whole, 1 kg, e.g. gilthead	Wire rack	2		180–200	45–50[1]
Fish, grilled, whole, 1.5 kg, e.g. salmon	Wire rack	2		170–190	50–60[1]
Fish fillet/fish cutlet, 2–3 cm thick, grilled	Wire rack	3		2	20–25[1]

[1] Slide the universal pan underneath the wire rack.

Tips for next time you roast

If roasting is not successful the first time, you can find some tips here.

Topic	Tip
The roast is too dark and the crackling is partly burnt.	■ Select a lower temperature. ■ Reduce the roasting time.
Your roast is too dry.	■ Select a lower temperature. ■ Reduce the roasting time.
The crackling on your roast is too thin.	■ Increase the temperature. Or: ■ Switch on the grill briefly at the end of the roasting time.
Your roasting juices are burnt.	■ Select a smaller item of cookware. ■ When roasting, add more liquid.
Your roasting juices are too clear and watery.	■ Use a larger item of cookware so that more liquid evaporates. ■ When roasting, add less liquid.
The meat is burned slightly during braising.	■ Check whether the roasting dish and lid fit together and close properly. ■ Reduce the temperature. ■ Add liquid when braising.

18.10 Vegetables and side dishes

This is where you can find information about preparing vegetable products that you can use as a side dish for your meals.

Recommended settings

Vegetables and side dishes

Use the settings listed in the table.

Food	Accessories/cookware	Shelf position	Type of heating	Temperature in °C/grill setting	Cooking time in mins
Grilled vegetables	Universal pan	5		3	10–20
Baked potatoes, halved	Universal pan	3		190–210	25–35
Potato products, frozen, e.g. chips, croquettes, potato pockets, rösti	Universal pan	3		200–220	25–35
Chips, 2 levels	Universal pan + Baking tray	3+1		190–210	30–40

18.11 Yoghurt

You can also use your appliance to make your own yoghurt.

Making yoghurt

1. Remove the accessories and shelves from the cooking compartment.
2. Heat 1 litre of milk (3.5% fat) to 90 °C on the hob and then leave it to cool down to 40 °C. Only heat UHT milk to 40 °C.
3. Stir 30 g yoghurt into the milk.
4. Pour the mixture into small containers, e.g. small jars with lids.
5. Cover the containers with film, e.g. cling film.
6. Place the containers on the cooking compartment floor.
7. Use the recommended settings when configuring the appliance settings.
8. After making the yoghurt, leave it to cool in the refrigerator.

Recommended settings

Yoghurt

Meal	Accessory/cookware	Shelf position	Type of heating/ function	Temperature in °C	Cooking time, minutes
Yoghurt	Cup/jar	Cooking compartment floor		-	4–5 hours

18.12 Tips for keeping acrylamide levels to a minimum when cooking

Acrylamide is harmful to your health and is produced when you cook cereal and potato products at very high temperatures.

Meal	Tip
General information	■ Keep cooking times as short as possible. ■ Cook food until it is golden brown, but not too dark. ■ Use large, thick pieces of food. These contain less acrylamide.
Baking	■ Set max. top/bottom heating to 200 °C. ■ Set the temperature in hot air mode to max. 180 °C.
Biscuits	■ Brush baked items and biscuits with egg or egg yolk. This reduces the production of acrylamide.
Oven chips	■ Spread the chips out evenly and in a single layer on the baking tray. ■ Cook at least 400 g at once on a baking tray so that the chips do not dry out.

18.13 Drying

You can achieve outstanding drying results for the food using hot air. With this type of preserving, flavours are concentrated as a result of the dehydration.
The temperature and drying time depend on the type, moistness, ripeness and thickness of the food. The longer you leave the food to be dried, the better it will

be preserved. The thinner you cut the slices, the quicker the drying process will be and the more flavour the dried food will retain. Settings ranges are specified for this reason.

Preparation for drying

1. Only use unblemished, fresh fruit, vegetables and herbs and wash them thoroughly. Line the wire rack with greaseproof paper or parchment paper. Drain the excess water from the fruit and then dry it.
2. If required, cut the fruit into thin pieces or slices of equal size. Place unpeeled fruit onto the dish with the sliced surfaces facing upwards. Ensure that neither fruit nor mushrooms overlap on the wire rack.
3. Grate vegetables and then blanch them. Drain the excess water from the blanched vegetables and spread them evenly on the wire rack.
4. Dry herbs on the stem. Spread the herbs out evenly and slightly heaped on the wire rack.
5. Turn very juicy fruit and vegetables several times. After drying, remove the dried fruit and vegetables from the paper immediately.

Recommended settings

Drying

The table contains settings for drying various foodstuffs. If you want to dry food that is not listed in the table, you should use similar foodstuffs in the table as a reference.

Note:
Use the following shelf positions for drying:
- 1 wire rack: Shelf position 3
- 2 wire racks: Shelf positions 3 + 1

Meal	Accessory/cookware	Shelf position	Type of heating	Temperature in °C	Cooking time, minutes
Pome fruit, e.g. apple rings, 3 mm thick, 200 g per wire rack	Wire rack	3 3+1		80	4–8 hours
Root vegetables, e.g. carrots, grated, blanched	Wire rack	3 3+1		80	4–7 hours
Mushrooms, sliced	Wire rack	3 3+1		80	5–8 hours
Herbs, stalks removed	Wire rack	3 3+1		60	2-5 hours

18.14 Preserving food

You can preserve fruit and vegetables by heating them and sealing them in air-tight jars.
- Only use heat-resistant, clean, undamaged preserving jars, rubber seals and clips.
- Only use fruit and vegetables which are in perfect condition.
- Only use jars that are the same size and contain the same food.

⚠ WARNING – Risk of injury!
If the preserving process is not carried out correctly, the preserving jars may crack.
- ▸ Make sure that you use the specified setting values.
- ▸ Use clean and undamaged preserving jars.
- ▸ Place no more than six ½ litre or 1 litre jars of food in the oven at a time. Do not use jars that are larger than this.

Preparing fruit or vegetables for preserving

1. Thoroughly wash the fruit and vegetables.
2. Prepare the fruit and vegetables, e.g. peel, remove pips/stone and chop.
3. Fill the glass up to approx. 2 cm below the mouth.
4. Fill the jars with hot liquid.
   For one-litre jars, approx. 400 ml of liquid is necessary.
   For fruit: Skimmed sugar solution
   – Approx. 250 g sugar for sweet fruit
   – Approx. 500 g sugar for sour fruit
   For vegetables:
   – Boiled water
5. Wipe the rims of the jars. They must be clean.
6. Place a damp rubber seal and a lid on each jar.
7. Seal the jars with the clips.

Preserving fruit or vegetables

1. Slide the universal pan into the cooking compartment at shelf position 2.
2. Once they have been prepared, place the jars into the universal pan in such a way that they do not touch one another.
3. Pour 500 ml hot water (approx. 80 °C) into the universal pan.
4. Use the recommended setting values when configuring the appliance settings.
   ✔ After approx. 40 to 50 minutes, small bubbles begin to form at short intervals. The jar contents "bubble".
5. Fruit
   – Once all of the jars are bubbling, switch off the appliance.

- Remove the jars from the cooking compartment after the specified residual heating time.

6. Vegetables
   - Once all of the jars are bubbling, reduce the temperature to 120 °C.
   - Switch off the appliance after the specified residual heating time and remove the jars from the cooking compartment.
7. **ATTENTION!**
   If there are large temperature differences, the jars may shatter.
   - ▸ Do not place jars on cold or wet surfaces.
   - ▸ Protect the jars from draughts.

   Place the jars on a clean cloth and cover them.
8. Once the jars have cooled, remove the clips.

Recommended settings

Preserving food

The specified times in the table are average values for preserving fruit and vegetables. They may be influenced by room temperature, the number of jars, quantity, heat and quality of the jar contents. The specifications are based on 1-litre round jars.

Meal	Accessory/ cookware	Shelf position	Type of heating	Temperature in °C	Cooking time, minutes
Vegetables, beetroot:	1-litre preserving jars	2	⬚	**1.** 170–180 **2.** 120–140 **3.** -	**1.** Until bubbling starts **2.** Once it starts bubbling: 35 **3.** Residual heat: 30
Vegetables, e.g. cucumbers	1-litre preserving jars	2	⬚	**1.** 170–180 **2.** -	**1.** Until bubbling starts **2.** Residual heat: 35
Vegetables, e.g. Brussels sprouts	1-litre preserving jars	2	⬚	**1.** 170–180 **2.** 120–140 **3.** -	**1.** Until bubbling starts **2.** Once it starts bubbling: 45 **3.** Residual heat: 30
Vegetables, e.g. beans, kohlrabi, red cabbage	1-litre preserving jars	2	⬚	**1.** 170–180 **2.** 120–140 **3.** -	**1.** Until bubbling starts **2.** Once it starts bubbling: 60 **3.** Residual heat: 30
Vegetables, e.g. peas	1-litre preserving jars	2	⬚	**1.** 170–180 **2.** 120–140 **3.** -	**1.** Until bubbling starts **2.** Once it starts bubbling: 70 **3.** Residual heat: 30
Stone fruit, e.g. cherries, apricot, peach, grapes, gooseberries, damsons	1-litre preserving jars	2	⬚	**1.** 170–180 **2.** -	**1.** Until bubbling starts **2.** Residual heat: 30
Pomes, e.g. apples, strawberries, gooseberries	1-litre preserving jars	2	⬚	**1.** 170–180 **2.** -	**1.** Until it starts bubbling: 30–40 **2.** Residual heat: 25
Pureed fruit, e.g. apples, pears and plums	1-litre preserving jars	2	⬚	**1.** 170–180 **2.** -	**1.** Until it starts bubbling: 30–40 **2.** Residual heat: 35

18.15 Proving dough

You can prove yeast dough more quickly in your appliance than at room temperature.

Proving dough

Always allow yeast dough to prove in two steps: Once in its entirety (dough fermentation) and a second time in the baking tin (final fermentation).

1. Place the dough into a heat-resistant bowl.
2. Place the bowl on the wire rack.
3. Use the recommended settings when configuring the appliance settings.
   Only start operation when the cooking compartment has fully cooled down.
4. Do not open the appliance door while the dough is proving, otherwise moisture will escape.
5. Continue processing the dough and mould it into the final shape for baking.
6. Place the dough into the cooking compartment at the specified shelf position.

Tip: If you want to preheat the oven, do not carry out the final proving stage in the appliance.

Recommended settings

Proving dough

The temperature and time are dependent on the type and quantity of the ingredients. The values in the table are therefore guide values only.

Meal	Accessory/cookware	Shelf position	Type of heating	Temperature in °C	Cooking time, minutes
Yeast dough, light	**1.** Bowl **2.** Universal pan	**1.** 2 **2.** 2	**1.** **2.**	**1.** 50[1] **2.**50[1]	**1.** 25–30 **2.**10–20
Yeast dough, heavy and rich	**1.** Bowl **2.** Universal pan	**1.** 2 **2.** 2	**1.** **2.**	**1.** 50[1] **2.**50[1]	**1.**60–75 **2.**45–60

[1] Preheat the appliance for 5 minutes.

18.16 Defrosting

For defrosting frozen fruit, vegetables and baked items. Poultry, meat and fish should ideally be defrosted in the refrigerator. Not suitable for cream cakes or cream gateaux.
When defrosting food, use the following shelf positions:
- 1 wire rack: Shelf position 2
- 2 wire racks: Shelf positions 3+1

Note: Food that is frozen in thin layers or small portions defrosts more quickly than food frozen in larger blocks.

- Take the food out of its packaging and place in a suitable dish on the wire rack.
- Redistribute the food or turn it once or twice as it defrosts. Turn large pieces of food several times. As the food defrosts, break up any clumps and remove items that have already defrosted from the appliance.
- To allow the temperature to equalise, leave the defrosted food to rest for another 10 to 30 minutes in the appliance after switching it off.

Recommended settings

Defrosting

Meal	Accessory/cookware	Shelf position	Type of heating	Temperature in °C	Cooking time, minutes
Baked items, cake and bread, fruit, vegetables, meat products	Wire rack	2 3+1		-	-

18.17 Test dishes

These overviews have been produced for test institutes to facilitate appliance testing in accordance with EN 60350-1.

Baking

Please take note of the following information if you are baking test dishes.

General information

- The setting values apply to food placed in the cooking compartment while the cooking compartment is still cold.
- Observe the notes about preheating in the tables. These setting values assume that the rapid heating function is not being used.
- When baking, use the lower of the listed temperatures to begin with.

Shelf positions

Shelf positions for baking on one level:
- Universal pan/baking tray: Shelf position 3
- Baking tins on the wire rack: Shelf position 2

Note: Items that are placed in the oven on baking trays or in baking tins/dishes at the same time will not necessarily be ready at the same time.

Shelf positions for baking on two levels:
- Universal pan: Shelf position 3
  Baking tray: Shelf position 1
- Baking tins on the wire rack:
  First wire rack: Shelf position 3
  Second wire rack: Shelf position 1

Shelf positions for baking on three levels:
- Baking tray: Shelf position 5
  Universal pan: Shelf position 3
  Baking tray: Shelf position 1

Baking with two springform cake tins:

If you can use your appliance to cook on multiple levels, position baking tins either next to one another or offset on different shelves so that they are not directly one above the other in the cooking compartment.

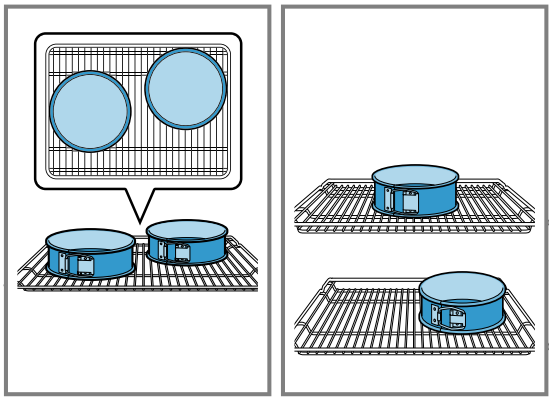

Recommended settings

Baking

Meal	Accessory/cookware	Shelf position	Type of heating	Temperature in °C	Cooking time, minutes
Viennese whirls	Universal pan	3		140–150	30–40
Viennese whirls	Universal pan	3		140–150	30–40
Viennese whirls, 2 levels	Universal pan + Baking tray	3+1		140–150[1]	30–45
Viennese whirls, 3 levels	2x Baking tray + Universal pan	5+3+1		130–140[1]	40–55
Small cakes	Universal pan	3		150[1]	25–35
Small cakes	Universal pan	3		150[1]	25–35
Small cakes, 2 levels	Universal pan + Baking tray	3+1		150[1]	25–35
Small cakes, 3 levels	2x Baking tray + Universal pan	5+3+1		140[1]	35–45
Hot water sponge cake	Springform cake tin, diameter 26 cm	2		160–170[2]	30–40
Hot water sponge cake	Springform cake tin, diameter 26 cm	2		170	30–40
Hot water sponge cake, 2 levels	Springform cake tin, diameter 26 cm	3+1		150–160[2]	30–45

[1] Preheat the appliance for 5 minutes. For appliances with the rapid heating function, do not use this function for preheating.
[2] Preheat the appliance. For appliances with the rapid heating function, do not use this function for preheating.

Grilling

Food	Accessories/cookware	Shelf position	Type of heating	Temperature in °C/grill setting	Cooking time in mins
Toasting bread	Wire rack	5		3	0.2–1.5

Thank you for buying a Bosch Home Appliance!

Register your new device on MyBosch now and profit directly from:

- **Expert tips & tricks for your appliance**
- **Warranty extension options**
- **Discounts for accessories & spare-parts**
- **Digital manual and all appliance data at hand**
- **Easy access to Bosch Home Appliances Service**

Free and easy registration – also on mobile phones:
www.bosch-home.com/welcome

Looking for help? You'll find it here.

Expert advice for your Bosch home appliances, help with problems or a repair from Bosch experts.
Find out everything about the many ways Bosch can support you:
www.bosch-home.com/service
Contact data of all countries are listed in the attached service directory.

BSH Hausgeräte GmbH
Carl-Wery-Straße 34
81739 München, GERMANY
www.bosch-home.com

A Bosch Company

9001646351 (020209)
en

Valid within Great Britain:
Imported to Great Britain by
BSH Home Appliances Ltd.
Grand Union House
Old Wolverton Road
Wolverton, Milton Keynes
MK12 5PT
United Kingdom