Panasonic®

Operating and Installation Instructions

Built-in Oven | **Household Use**

Model No. : HL-FD61BSJPQ

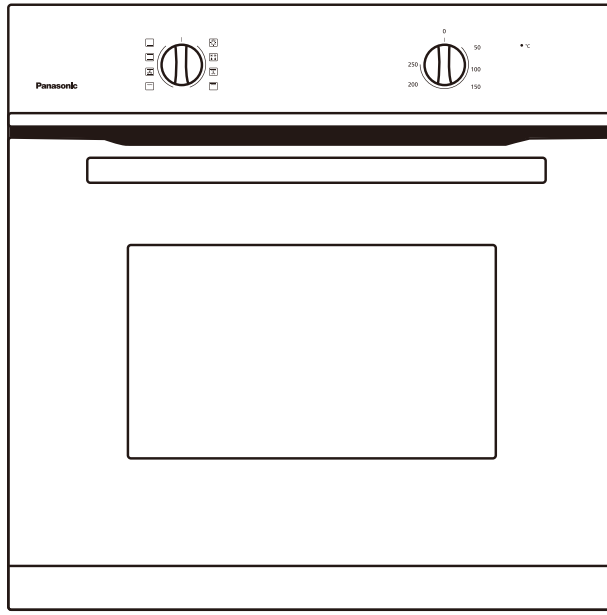

Operating and Installation Instructions ..... **2 - 20**

Thank you for purchasing the Panasonic product.

- This appliance is intended for household use only.
- Please read these instructions carefully before attempting to install, operate or service this product.
- For optimum performance and safety, please read these instructions carefully and follow safety precautions when using this product.
- Before using this product **please pay extra attention to "Safety Precautions" (Page 3 - 5).**

Keep this Operating and Installation Instructions for future use

Tables of Contents

Safety Precautions ..... **3 - 5**
Parts Identification ..... 6 - 7
• Parts Identification 6
• Accessories 7
• Control Panel 7

Using the Oven ..... 8 - 12
• Function Setting 8
• Before Using the Oven 9
• While Using the Oven 9
• Operations 10
• Rack Placement Warning 10
• Cooking Advice and Instructions ..... 11 - 12
• Tips for Energy Saving 12
Cleaning and Maintenance ..... 13 - 14
• Cleaning the Oven Door 13
• Cleaning the Inside of the Oven 13
• Bulb Replacement 14

Specifications 15

For Installer

Installation Instructions ..... 16 - 20
• IMPORTANT 16
• Electrical Connection ..... 16 - 17
• Positioning the Oven ..... 18 - 20
• Securing the Oven to a Cabinet 20

Safety Precautions

Make sure to follow these instructions

In order to prevent accidents or injuries to the users, other people, and damage to property, please follow the instructions below.

■ The following charts indicate the degree of damage caused by wrong operation.

⚠ **WARNING** **Indicate serious injury or death.**	⚠ **CAUTION** **Indicate risk of injury or property damage.**

■ The symbols are classified and explained as follows.

These symbols indicate prohibition.	**This symbol indicates requirement that must be followed.**

⚠ WARNING

Stop using the product when any abnormality/failure occurs and turn 'OFF' the isolating switch or remove power plug if fitted. (Risk of smoke/fire/electric shock)

Example of abnormality/failure:

- Abnormal noise or heat.
- Abnormal emission of smoke, fire.
- The product sometimes does not start when turned on.
- The power is sometimes disconnected when the cord is moved.
- Burnt odour or abnormal noise is detected during operation.
- The body is deformed or abnormally hot.
- The Oven door is cracked.

Contact a Panasonic Authorised Service Centre immediately for maintenance/repair.

The oven must be earthed. Plug the power cord to socket outlet with earthing continuity terminal.

Improper grounding could cause electric shock.

If the supply cord is damaged, it must be replaced by the manufacturer, its service agent or similarly qualified persons in order to avoid a hazard.

Ensure that the appliance is switched OFF before replacing the lamp to avoid the possibility of electric shock.

When disconnecting the Power Plug, hold the plug itself. Do not pull the cord in anyway. The cord may be damaged and may cause fire or electric shock.

The means for disconnection must be incorporated in the fixed wiring in accordance with the wiring rules.

This appliance is necessary to allow disconnection from the supply after installation. The disconnection may be achieved by having the plug accessible or by incorporating a switch in the fixed wiring in accordance with the wiring rules.

Be sure to disconnect the Power Plug from the wall outlet or switch OFF the external switch before maintenance, repair or service. Also, do not handle the Power Plug or external switch with wet hand.

Safety Precautions

Make sure to follow these instructions

⚠ WARNING

- This appliance is not intended for use by persons (including children) with reduced physical, sensory or mental capabilities, or lack of experience and knowledge, unless they have been given supervision or instruction concerning use of the appliance by a person responsible for their safety. Children should be supervised to ensure that they do not play with the appliance.
- During use the appliance becomes hot. Care should be taken to avoid touching heating elements inside the oven.
- Accessible parts may become hot during use. Young children should be kept away.
- Make sure the Wire Shelf and Enamel Baking Tray are fully inserted and not in contact with the glass door, it may cause shattering of glass door.
- Insert the Power Plug firmly, otherwise it may cause fire or electric shock.
- Clean the Power Plug regularly with dry cloth, otherwise, it may cause insufficient insulation due to moisture, and may cause fire.
- Do not damage the power cord or Power Plug.
- Do not connect the power voltage other than 220 - 240 V ～, may cause fire or electric shock.
- The oven must not be installed behind a decorative door in order to avoid overheating.
- Do not disassemble the oven for reconstruction.
- Do not discard the packaging or any part of it, or leave it unattended. It can constitute a suffocation hazard for children, especially the plastic bags.

⚠ CAUTION

- Installation and servicing must be carried out by competent persons in accordance with the regulation in force.
- Never obstruct the openings and slits provided for ventilation and heat release.
- Before the oven is operated, all the protective film applied must be removed (apart from the Name Plate).
- Take care that no objects are stuck in the door of the oven.
- Please use caution when unpacking, installing or moving this product, as some exposed edges may be sharp to the touch and may cause injury if not handled with care.
- Oven become very hot during use. Suitable heat-proof gloves should be worn when handling.
- All cooking operations must take place with the door closed.

⚠ CAUTION

When the oven is first switched on, it may emit an unpleasant smell. This is due to the bonding agent used for insulating panels within the oven. Heat up the new empty oven with the conventional cooking function, 250 °C for 15 - 20 minutes in order to remove any manufacturing residues. It is normal that there will be a slight smoke and odours.

Spray cleaner is not to be used for cleaning.

Do not use harsh abrasive cleaners or sharp metal scrapers to clean the oven door glass, since they can scratch the surface, which may result in shattering of the glass.

A steam cleaner is not to be used.

Do not use this oven for heating rooms.

Do not rest any weight or sit on the open door of the oven.

The Name Plate with the technical data, serial number and brand name has been visibly affixed to the oven.
DO NOT REMOVE THE NAME PLATE FOR ANY REASON.

Do not allow residues of sugary food (such as jam) to set inside the oven since they might damage the enamel lining of the oven.

Do not use plastic kitchenware or containers. The high temperatures inside the oven could melt the plastic and damage the oven.

Do not use sealed tins or containers in the oven. Over pressure may occur inside the containers during cooking, creating a danger of explosion.

Do not leave the oven unattended during cooking process where fats or oils could be released. Fats and oils may catch fire.

Do not cover the bottom of the oven with aluminium or tin foil sheets during cooking and do not place pans or trays on it to avoid damage to the enamelled surface.

If the surfaces are still very hot during cooking, do not pour water directly onto the trays. The steam could cause severe burns and damage to the enamelled surfaces.

Do not insert pointed metal objects into any aperture in the oven.

Do not modify this oven.

Do not replace the parts of the appliance with spare parts other than authorised Panasonic parts.

Do not put inflammable material inside the oven; if it is switched on by accident, it may cause a fire.

■ **Note:**

- Contact the Panasonic service centre or authorized dealer for maintenance and repair.

Parts Identification

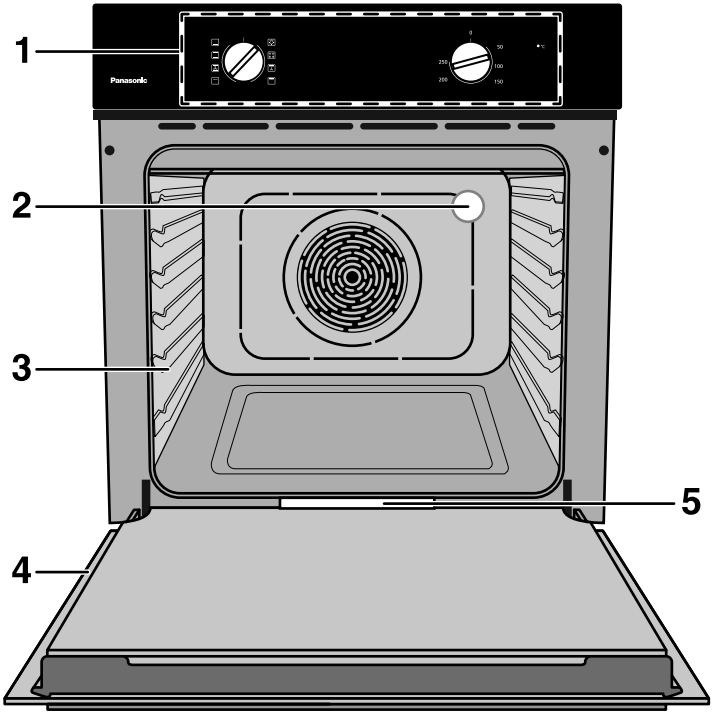

1. Control Panel
2. Oven Lamp
3. Moulded Rack
4. Removable Door
5. Name Plate

Parts Identification

Accessories

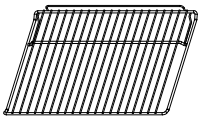

Wire Shelf
For roasting and grilling (2 pcs).

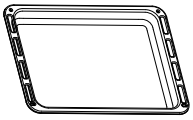

Enamel Baking Tray
For cooking large quantities of food such as moist cakes, pastries and frozen food or for collecting fat/spillage and meat juices.



Warranty Card

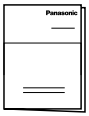

Operating and Installation Instructions

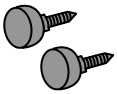

Screw Pack
Screw with screw cap (2 pcs.)

■ **Note:**
- Contact the Panasonic service centre or authorized dealer for maintenance and repair.
- Use original Panasonic accessories only.

Control Panel



1. **Function Setting Rotary Knob**
2. **Temperature Setting Rotary Knob**
3. **Indicator Light**
   - Will light off to confirm that the set temperature has been reached.

Function Setting

To select the desired cooking function, turn the knob to the related symbol.

Symbol	Function description
	**Oven Lamp** Enables the user to observe the progress of cooking without opening the door.
	**Defrost** The circulation of air at room temperature enables quicker thawing of frozen food, (without the use of any heat). It's a gentle but quick way to speed up the defrosting time and thawing of ready-made dishes and cream filled product, etc.
	**Bottom Heat** A concealed element in the bottom of the oven provides a more concentrative heat to the base of food without browning. This is ideal for slow cooking dishes such as casseroles, stews, pastries and pizzas where a crispy base is desired.
	**Conventional Cooking** The top and bottom elements work together to provide conventional cooking.
	**Conventional Cooking with Fan** Combination of the fan and both heating elements provides more even heat penetration, saving up to 30 - 40% of energy. Dishes are lightly browned on the outside and still moist on the inside. ■ **Note:** • This function is suitable for grilling or roasting big pieces of meat at a higher temperature.
	**Radiant Grilling** The inner grill element switches on and off to maintain the temperature.
	**Double Grilling** The inside radiant element and top element are working.
	**Double Grilling with Fan** The inside radiant element and top element are working with fan.

Before Using the Oven

⚠ CAUTION

Before the oven is operated, all the protective film applied must be removed (apart from the Name Plate).

When the oven is first switched on, it may emit an unpleasant smell. This is due to the bonding agent used for insulating panels within the oven. Heat up the new empty oven with the conventional cooking function, 250 °C for 15 - 20 minutes in order to remove any manufacturing residues. It is normal that there will be a slight smoke and odours.

■ **Note:**

- Before the first operation, remove all accessories and clean with soft cloth and mild detergent.

While Using the Oven

⚠ CAUTION

All cooking operations must be carried out with the door fully closed.

Do not cover the bottom of the oven with aluminium or tin foil sheets during cooking and do not place pans or trays on it to avoid damage to the enamel coating surface.

■ **Note:**

- The oven is equipped with a cooling system which comes into operation when temperature sensor detects 70 °C during cooking, the fan causes a steady outflow of air from above the door. If the temperature drops to below 60 °C, the fan will stop its operation.

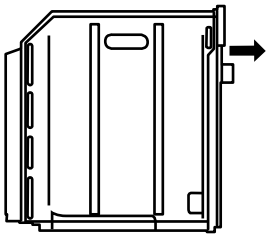

Operations

Function Setting

1. Rotate “Function Setting” knob to choose the cooking function as require.
2. Rotate “Temperature Setting” knob to choose the cooking temperature as require.
3. The heating will start immediately after step 2.

■ **Note:**

- The oven lamp will light up for all the cooking functions.
- and functions are not for heating.

Start/Cancel Function

1. For every function, rotate “Temperature Setting” knob to a temperature to start operating the function.
2. To cancel the function, rotate “Temperature Setting” knob back to 0 °C.

Rack Placement Warning

To ensure the Wire Shelf or Enamel Baking Tray operates safely, correct insertion and correct placement between the oven rack are necessary.
Alternatively, the level numbering which is embedded at front of the oven when the door is opened can be referred. (There are total 5 levels.)
This will ensure that during careful removal of the Wire Shelf or Enamel Baking Tray, hot food items should not slide out from the back.

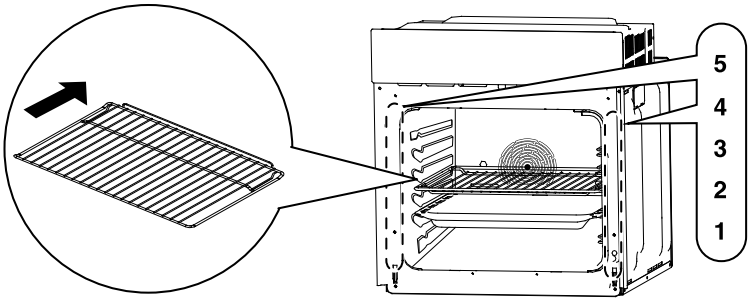

⚠ CAUTION

Use oven gloves as the oven and accessories will be extremely hot.

Cooking Advice and Instructions

General Advice

Preheating the oven before putting the food in is recommended. Do not place food inside the oven until "°C" on the control panel lights up to confirm that the set temperature has been reached.

For cooking on several levels, it is recommended to use a fan-assisted function to achieve uniform cooking at all heights.

In general, it is not possible to shorten the cooking times by increasing the temperature (the food could be well-done on the outside but underdone inside).

For best cooking results, we recommend placing suitable cookware in the centre of the Wire Shelf or Enamel Baking Tray.

To prevent excessive amounts of condensation from forming on the internal glass, hot food should not be left inside the oven for too long after cooking.

Advice for Cooking Meat

Cooking times, especially for meat, vary according to the thickness and quality of the food and to consumer taste.

It is recommended to use a meat thermometer when roasting meat. (Thermometer is not supplied with the oven.)

Advice for Cooking Cakes and Biscuits

Use dark metal moulds for cakes. They help to absorb the heat better.

The temperature and the cooking duration depend on the quality and consistency of the mixture.

Check whether the cake is cooked right through. At the end of the cooking time, insert a metal skewer into the highest point of the cake then take it out. If the batter does not stick to the metal skewer, the cake is cooked.

If the cake collapses when it comes out of the oven, on the next occasion reduce the set temperature by about 10 °C, selecting a longer cooking time if necessary.

Advice for Defrosting

Positioning frozen food in a lid-less container is recommended.

The food must be defrosted without its wrapping.

Lay out the food in a single layer to be defrosted evenly, not overlapping.

When defrosting meat, it is recommended to use the Wire Shelf positioned on the level-2 of the rack with the food on it and Enamel Baking Tray positioned on the level-1. In this way, the liquid from the defrosting food drains away from the food.

The most delicate parts can be covered with aluminium foil.

Advice for Cooking with the Grill and the Fan-assisted Grill

Using the Grill function, meat can be grilled even when it is put into the cold oven; preheating is recommended if the user wish to change the effect of the cooking.

With the Fan-assisted Grill function, however, it is recommended that the oven is preheated before grilling.

Tips for Energy Saving

To save energy during use of the oven, the following instructions may be followed:

1. All cooking operations must be carried out with the oven door fully closed.
2. Do not open the oven door frequently during cooking in progress, as this will allow heat to be dispersed from the oven.
3. When the oven is not in use, switch it off completely.
4. Use the “Energy-Saving Function” while cooking is in progress.
5. Keep the inside of the oven clean at all times.

⚠ WARNING

Before performing cleaning and maintenance tasks, use isolation switch to disconnect the power supply. Children should not clean the oven or perform maintenance tasks.

Cleaning the Oven Door

The glass door should always be kept throughly clean. Use absorbent kitchen roll; remove stubborn dirt with a damp sponge and an ordinary detergent.

- Do not use a steam cleaner for cleaning the oven.
- Do not use abrasive or corrosive cleaner for cleaning the glass door.
- Do not use rough or abrasive material or sharp metal scrapers to clean the oven`s glass door since they may scratch the surface.

Cleaning the Inside of the Oven

For the best oven maintenance, clean the oven regularly when it has cooled down after each cooking period.

- Take out all removable parts.
- For easier cleaning, the oven door can be removed.

Removing the Door from Oven

Disassembly of oven door components

- To remove the door, open the door to the maximum angle.Then pull the buckle at the door hinge backward.

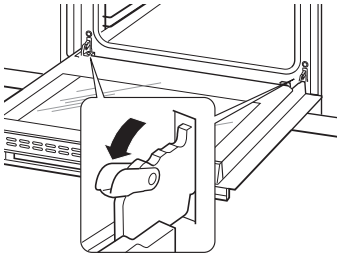

- Close the door to an angle approximately 30°. Hold the door with one hand on each side. Lift up and slowly pull the door out from the oven.

- Open the door rotation bracket assembly, refer the action in the following picture.

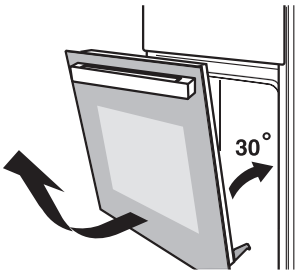

- Lift up the door outer glass and pull it out, then take the door middle glass out in the same way.

Replacing the Oven Door

WARNING:
Don't forcibly pulled out the door and prevent the glass breakage during the dismantling process.

WARNING:
The hinge springs could loose, causing personal injury.

WARNING:
Do not lift or carry the oven door by the door handle.

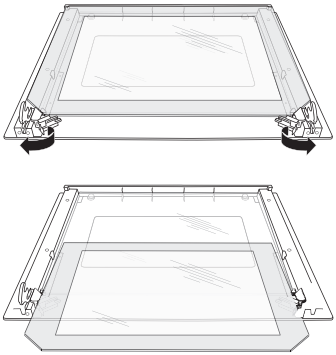

Bulb Replacement

The bulb used in the oven is a special bulb that has high temperature resistance (230 V ～ 25 W). So, buying a genuine bulb from an authorised dealer is necessary.
For replacement, proceed as follows:

1. Before replacing the light bulb, make sure the oven has been disconnected from the mains power via the isolating switch, in order to prevent an electric shock.
2. Unscrew the covering glass in anti-clockwise direction. (Figure 4)
3. Pull out the bulb from its position and replace the bulb with a new one of the same type. (Figure 5)
4. Screw the covering glass in clockwise direction after bulb replacement is completed.

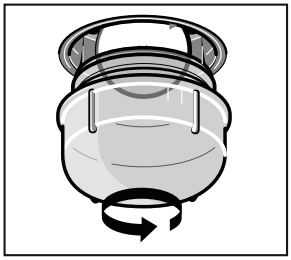

Figure 4

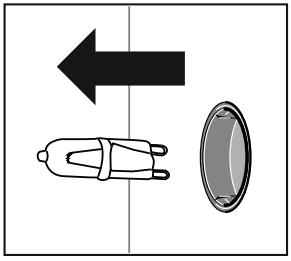

Figure 5

Specifications

Model	HL-FD61BSJPQ
Voltage	220 - 240 V ~
Wattage	3000 W
Frequency	50 - 60 Hz
Outside Dimensions (L × W × H)	Approx. 595 mm × 575 mm × 595 mm
Oven Cavity Volume	Approx. 65 Litres
Nett Weight	Approx. 32.0 kg

IMPORTANT

If the oven is to work properly, the kitchen housing must be suitable. The panels of the kitchen unit that are next to the oven must be made of a heat resistant material. Ensure that the glues of units that are made of veneered wood can withstand temperatures of at least 120 °C. Plastics or glues that cannot withstand such temperatures will melt and deform the unit. Once the oven has been lodged inside the units, electrical parts must be completely insulated. This is a legal safety requirement. All guards must be firmly fixed into place so that it is impossible to remove them without using special tools. Remove the back of the kitchen unit to ensure an adequate current of air circulates around the oven. The hob must have a rear gap of at least 45 mm.

Electrical Connection

⚠ WARNING

Electrical work must be performed by a legally qualified electrician.

This appliance is not fitted with other means for disconnection from the supply mains having a contact separation in all poles that provide full disconnection in under overvoltage category III conditions. Means for disconnection must be incorporated in the fixed wiring in accordance with the wiring rules and regulations.
Check the local utilities for electrical codes applied in the area. Failure to wire the appliance according to governing rules may result in a hazardous condition.
After installation show the customer where the isolating switch for the appliance is located. This must be easily accessible with the installed appliance.

This appliance is necessary to allow disconnection from the supply after installation. The disconnection may be achieved by having the plug accessible or by incorporating a switch in the fixed wiring in accordance with the wiring rules.

The identification Name Plate bearing the technical data, model number and brand name is visibly positioned in the oven (refer to page 6).
Do not remove this Name Plate for any reason.

The oven must be connected to earth in compliance with electrical system safety regulations.

A fixed connection is to be used, fitting the power line with an omni-polar circuit breaker with a contact opening gap equal to or greater than 3 mm, in an easily accessible position close to the appliance.

Installation Instructions

For Installer

The wires in the mains lead fitted to this oven are coloured in accordance with the following code:

- Green and Yellow - Earth (⏚)
- Blue - Neutral (N)
- Brown - Live (L)

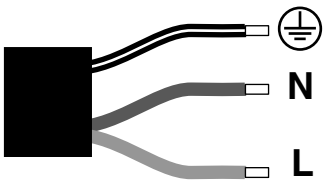

220 - 240 V ~
16 A

Proper size of flexible cord and electric wiring must be installed to avoid smoke emission and fire hazards.
< To use 3 core flexible cord; 2.5 mm² >.

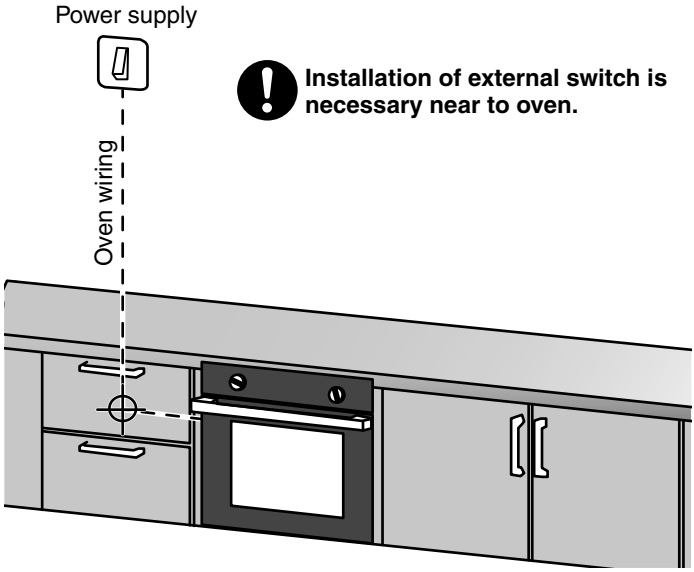

IMPORTANT:

Correct installation is the responsibility of the installer. Any malfunction or accident resulting from the failure to follow the Installation Instructions is not covered by the warranty.

Positioning the Oven

⚠ CAUTION

Installing the oven with the help of a second person is recommended.

The base on which the oven is resting must be completed as shown in below illustration.

Never exert pressure on the handle during installation into the cabinet.

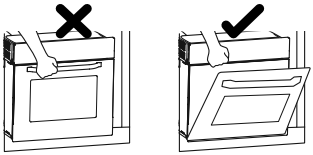

1. **Take note of general dimensions required for the installation.**
   The figure below shows the general dimensions of the oven.

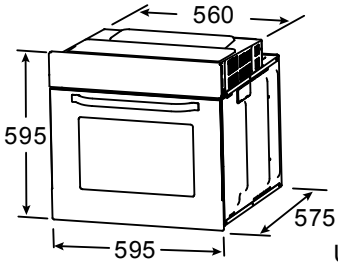

Unit: mm

2. **Flush fit and Proud fit.**
   For the best integration within a kitchen, install this oven in a standard 600 mm wide cabinet that gives a flush fit with the surrounding cabinet fronts. A recess of 25 mm is ideal. It can also be installed using a proud fit with the surrounding cabinet.

Flush fit (top view)	Proud fit (top view)
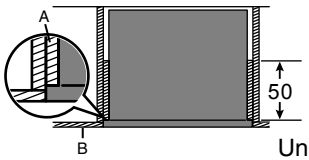 Unit: mm	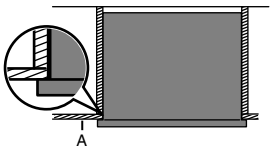
A: Infill panel recessed 25 mm from external cabinet / door to accommodate for a flush fit. B: Cabinet door.	A: Cabinet door.

Installation Instructions

For Installer

If there is any discrepancy between the illustration and the actual product, please refer to the actual product.

Cupboard Diagram (Standing Cupboard)

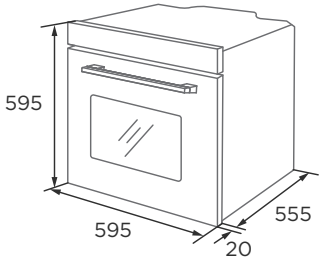

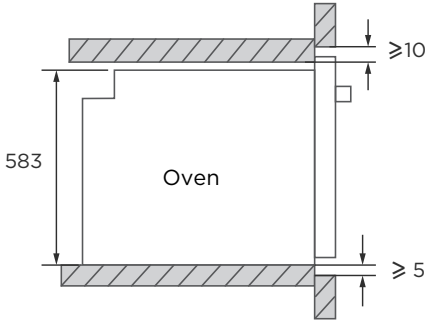

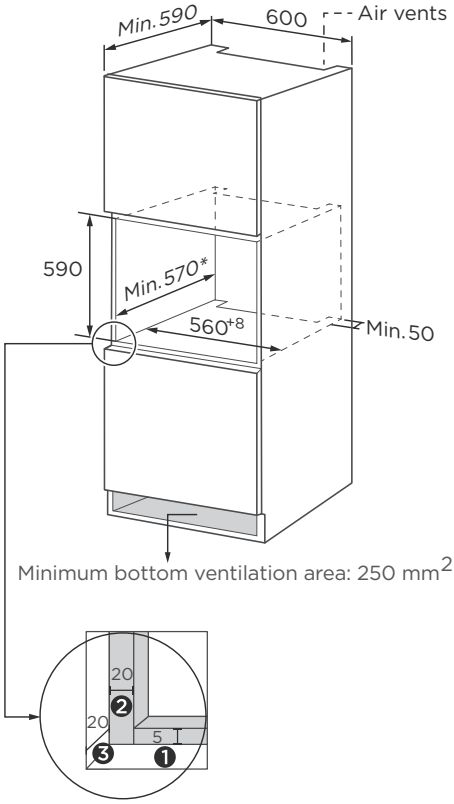

❶ Reserve 5 mm for the door panel at the top and bottom respectively.
❷ Reserve 20 mm for the door panel on the left and right respectively.
❸ Reserve 20 mm for the door panel in thickness.

1. The thickness of the cupboard board is 20 mm.
2. If the power socket is installed on the back of the appliance, the depth of the cupboard opening shall be increased from a minimum of 590 mm to 620 mm.
3. The dimensions in the figures are in mm.

Cupboard Diagram (Ground Cupboard)

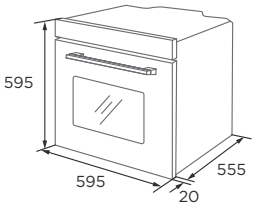

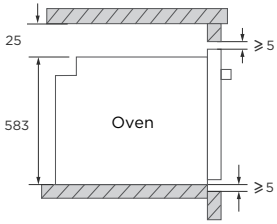

Without hob

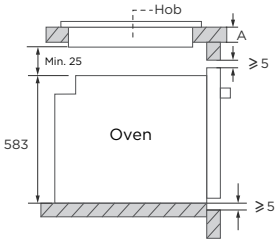

With hob

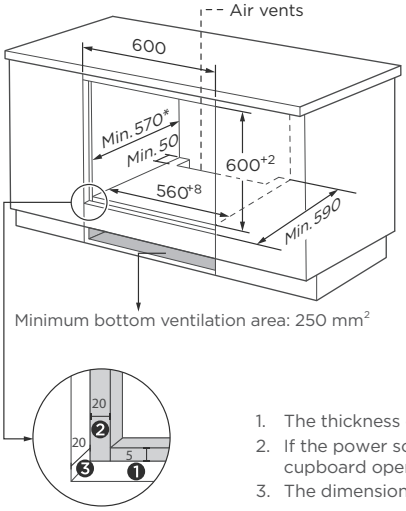

Minimum bottom ventilation area: 250 mm^2

❶ Reserve 5 mm for the door panel at the top and bottom respectively.
❷ Reserve 20 mm for the door panel on the left and right respectively.
❸ Reserve 20 mm for the door panel in thickness.

If the appliance is installed under the hob, the minimum thickness of worktop A is shown below:

Hob type	worktop A
Induction hob	37 mm
Full-surface induction hob	47 mm
Gas hob	30 mm
Electric hob	27 mm

1. The thickness of the cupboard board is 20 mm.
2. If the power socket is installed on the back of the appliance, the depth of the cupboard opening shall be increased from a minimum of 590 mm to 620 mm.
3. The dimensions in the figures are in mm.

Securing the Oven to a Cabinet

Fix the oven to the cabinet with 2 pieces of provided screws as illustrated below. Attach 2 screw caps for finishing appearance.

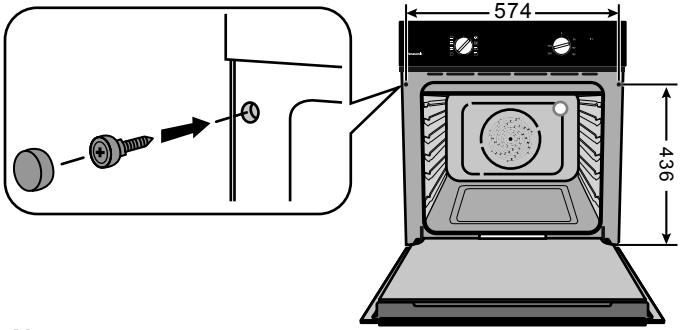

Base of kitchen cabinet

Unit: mm

■ **Note:**

- To locate the fixing holes, open the oven door and look at the side frame of the oven.

Panasonic Corporation

Printed in China
PN:16171100A49915

© Panasonic Corporation 2025

G0317-0