User Manual

Portable Audio System
Hipe Palazzo

Fiero

Contents

Intended Use **3**

Safety Precautions **3**
Rechargeable Battery Guidelines (Li-pol/Li-ion) 4

Device Diagram **6**
Control Panel Diagram 6
Rear Panel Diagram 7
Remote Control 8

Operating Instructions **9**
Preparing for Use 9
Turning On the Device 10
Standby Mode 10
Turning Off the Device 10
Lighting 11
Playing Audio from External Storage Devices 11
Playing Audio via an Audio Cable 11
FM Radio Mode 12
Bluetooth Mode 12
TWS Function 12
Multi-Connection 13
Bass Boost 13
Equalizer 13
Firmware Version 13
Factory Reset 13
Connecting a Microphone/Guitar 14
Using the Microphone 14

Specifications **15**

Troubleshooting Guide **16**

Rules and Conditions for Installation, Storage, Transportation, Sale (Distribution), and Disposal **17**

Warranty Information **18**

Additional Information **18**

Dear Customer,

Thank you for choosing our products.
We are pleased to offer you products and devices designed and manufactured to the highest standards of quality, functionality, and design. Before using the product, please read this manual carefully. It contains important information regarding your safety, as well as recommendations for the proper use and care of the product. Please keep this manual in a safe place and use it as a reference guide during future operation of the product.

Intended Use

The portable audio system is designed to play music, including in locations where no mains power outlet is available.

Safety Precautions

- Make sure the power outlet is easily accessible so that the device can be disconnected in an emergency.
- Do not use accessories that are not recommended by the manufacturer.
- Do not place the audio system on top of another electrical appliance.
- Do not place sources of open flames, such as lit candles, or containers filled with liquids, such as vases, glasses, or bottles, on or near the device. If liquid comes into contact with the device, disconnect it from the power supply immediately.
- Do not install the device in areas with high humidity. Do not touch the device with wet hands.
- Protect the device from overheating. Do not place it near powerful heat sources, such as heaters, and do not block its ventilation openings.
- Use a soft, dry cloth to clean the device.
- Disconnect the device from the power supply during thunderstorms or if it will not be used for an extended period.
- When disconnecting the device from the power supply, grasp the plug. Never pull on the power cord.
- If the device stops working or malfunctions, stop using it immediately. To prevent electric shock, do not open or disassemble the device or attempt to repair it yourself. Contact an authorized service center.
- The device is not intended for commercial use.
- The device is not intended for use by children or persons with reduced physical, sensory, or mental capabilities unless they are supervised by a person responsible for their safety. Do not allow children to play with the device.

Rechargeable Battery Guidelines (Li-pol/Li-ion)

Dear Customer, please note that this device uses a lithium-based rechargeable battery as its power source. Please carefully read the information below to help extend the life of your battery and prevent undesirable consequences during its operation.

Battery Capacity and Charge-Discharge Cycles

During prolonged storage and use, the rechargeable battery (hereinafter referred to as «the battery») tends to lose its charge and capacity. After 300 charge-discharge cycles (approximately one year of device use), the battery capacity may decrease to 80% of its nominal value. After 400 charge-discharge cycles, the battery capacity may decrease to 60% of its nominal capacity. Partial capacity reduction within these limits and time frames is natural battery wear and is not considered a defect.

Battery Capacity and Number of Charge-Discharge Cycles

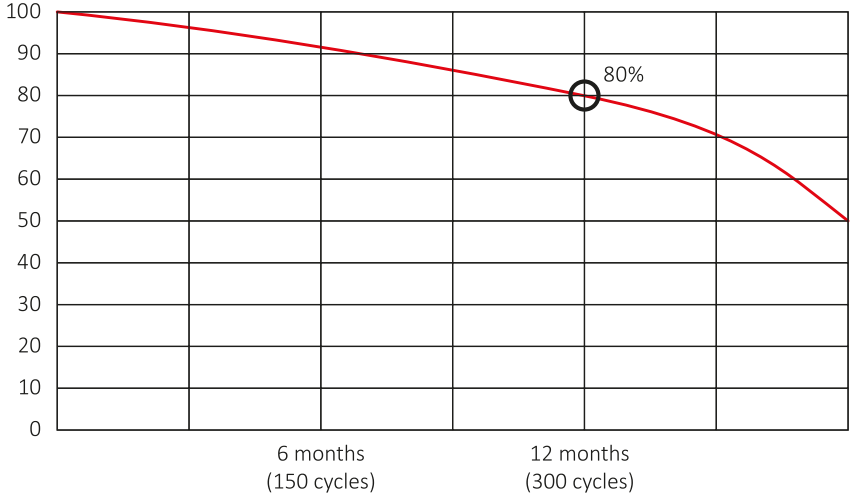

Natural Battery Wear

The battery loses charge even when stored separately from the device. The self-discharge rate is approximately 5% per month. Due to their design, rechargeable batteries have a limited service life and gradually degrade regardless of whether they are in use. This degradation accelerates at higher temperatures and when the charge level deviates from the «optimal» storage level, which is generally considered to be 40%. In other words, if the battery is not in use, it is advisable to keep the charge level between 40% and 50%.

Use Only the Original Charger

The battery's charge and discharge capability is controlled by its built-in Battery Management System (BMS). Forced «fast charging» modes using external chargers for Li-ion batteries are strictly not recommended, as charge and discharge currents are limited. Li-ion batteries do not have a so-called «memory effect». You can start charging or discharging the battery from any charge level.

Most devices have charge and discharge limits—the controller may prevent the battery charging if, for example, the charge is already above 90%. It will also prevent the battery from fully discharging, protecting the cells from damage. Even if the device is powered from the mains, the Li-ion battery should undergo a full charge/discharge cycle at least once a month (until the «low battery» warning appears). Never let the battery discharge completely. A Li-ion battery degrades quickly if stored in a discharged state for a prolonged period. If this happens, charge it immediately. If the battery remains in a discharged state for two weeks or more, irreversible capacity loss occurs in the cells, which will ultimately lead to battery failure.

Observe the Temperature Requirements

Batteries must be stored in a charged state at temperatures between +15 °C and +35 °C with normal humidity. Batteries do not perform well during prolonged operation in very high (above +40 °C) or very low (below -10 °C) ambient temperatures. Do not leave the battery in direct sunlight.

Do Not Disassemble, Burn, or Use Damaged Batteries

Under no circumstances should you attempt to disassemble the battery or charge its individual cells. For repair or maintenance, please contact an authorized service center. Puncturing or crushing the cells can cause an internal short circuit, leading to fire and explosion. Melting of lithium due to high temperatures can also cause an explosion. If the seal is broken, water or condensed atmospheric moisture can enter the cell, potentially triggering a reaction that releases hydrogen and causes a fire. You can check the current battery status using the battery indicator, which is available on almost all devices (please check its location and operation method at the time of purchase).

CAUTION!

- Be careful — damaged batteries may release harmful substances.
- If the battery is replaceable (removable), and you discover problems with its performance, contact a service center (see the warranty period in the warranty information). If the battery is built-in (an integral part of the device), the warranty applies to the device itself. You should also contact a service center. The sooner a malfunctioning battery is taken in for repair, the better the chances of restoring it at minimal cost.
- Battery operating time depends on many other factors, and the actual operating time may differ from the stated value.
- Rechargeable batteries have a limited number of charge cycles and may eventually need replacement (see the limited warranty conditions for the battery in the warranty information). Battery operating time depends on the usage mode and settings.

Device Diagram

Control Panel Diagram

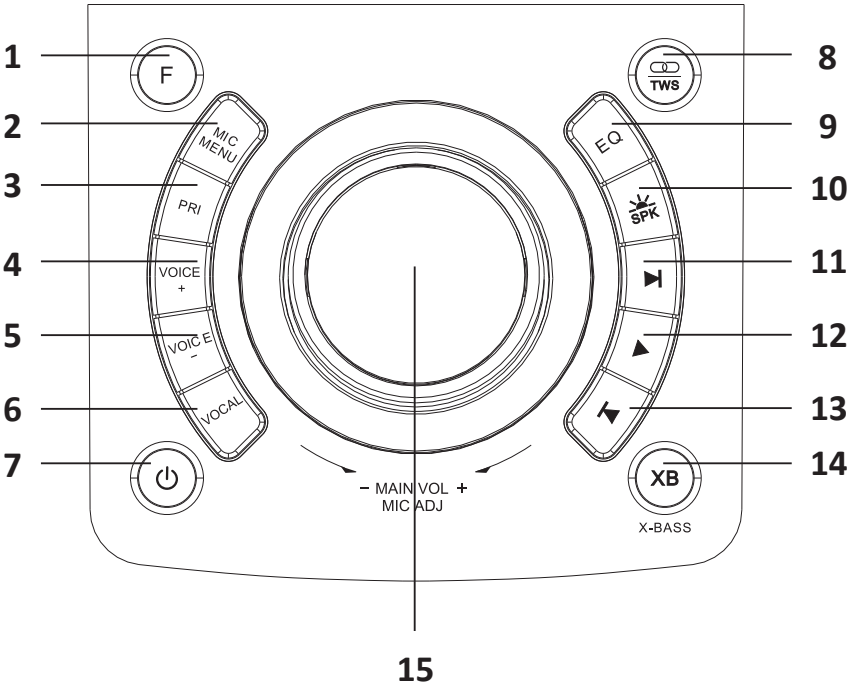

1. Input source selection button (Bluetooth/USB/AUX/FM).
2. Microphone/guitar volume settings button.
3. Microphone priority mode on/off button.
4. Microphone voice pitch increase button.
5. Microphone voice pitch decrease button.
6. Karaoke mode on/off button.
7. Power button.
8. TWS / multi-connection mode on/off button.
9. Equalizer mode selection button.
10. Lighting on/off button.
11. Next track button.
12. Play/Pause button.
13. Previous track button.
14. Bass boost button.
15. Volume control/display.

Rear Panel Diagram

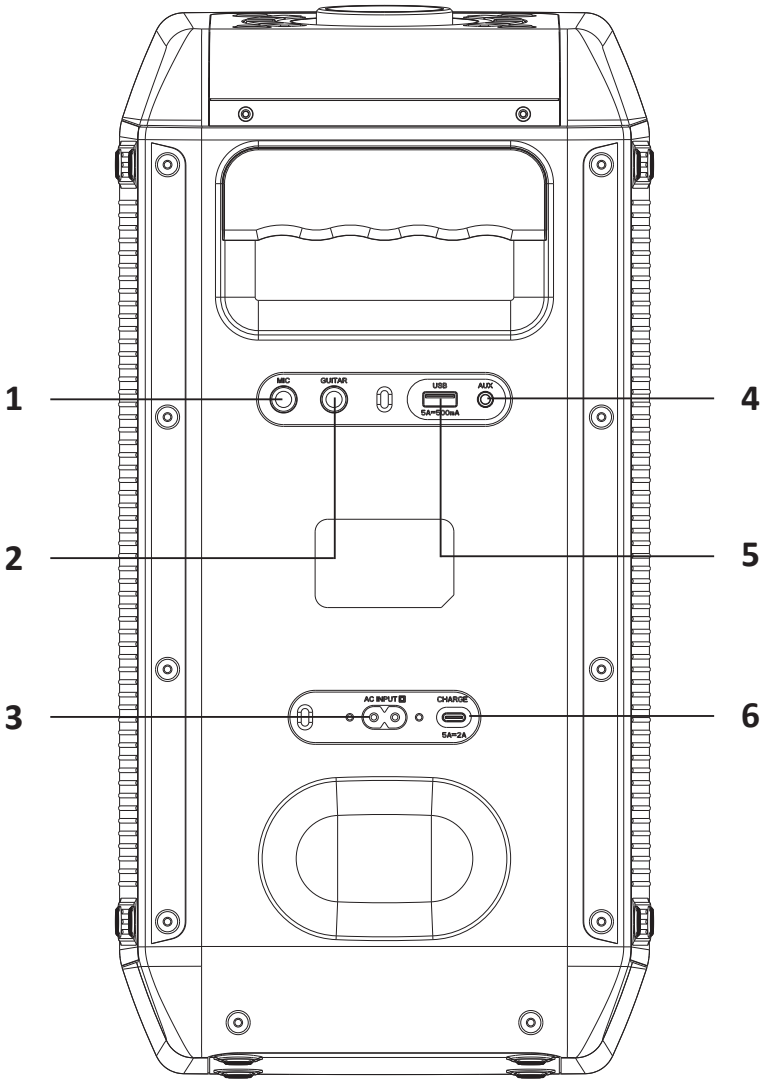

1. Microphone input.
2. Electric guitar input.
3. AC power input (110–240 V ~ 50–60 Hz).
4. AUX input.
5. USB Type-A port.
6. USB Type-C charging port (5 V ⎓ 2 A).

Remote Control

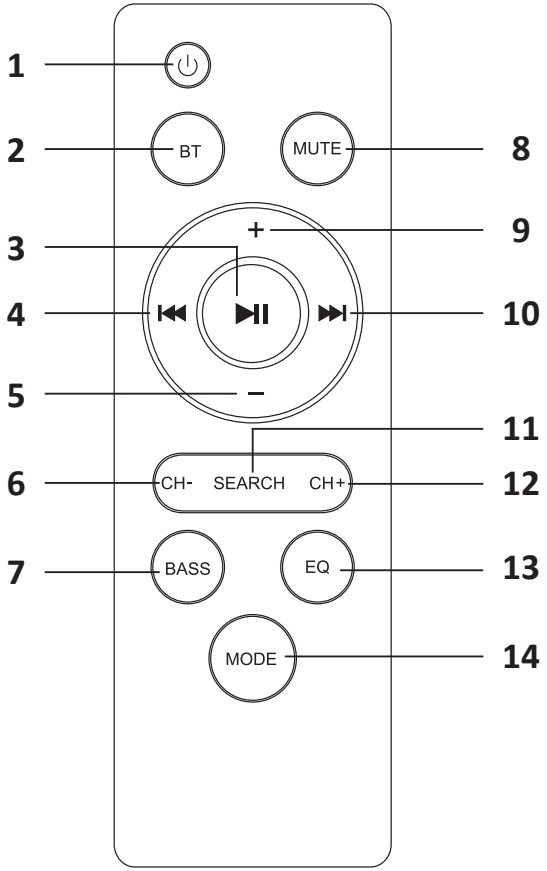

1. Power button.
2. Bluetooth button.
3. Play/Pause button.
4. Previous track button.
5. Volume down button.
6. Previous radio station button.
7. Bass button.
8. Mute/Unmute button.
9. Volume up button.
10. Next track button.
11. Radio station search button.
12. Next radio station button.
13. Equalizer button.
14. Input source selection button.

Operating Instructions

Preparing for Use

Connecting to the Power Supply

Connect the device to a power outlet using the supplied power cord.

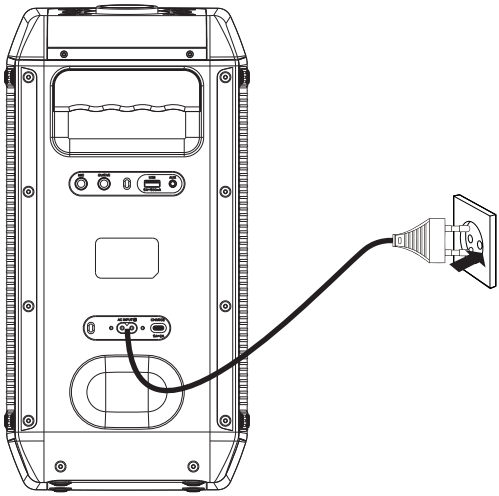

CAUTION!

- Before connecting the device, make sure the voltage indicated on it matches the voltage of your local power supply.
- Do not use the device if the power cord is damaged. Contact an authorized service center to have it replaced.

Preparing the Remote Control

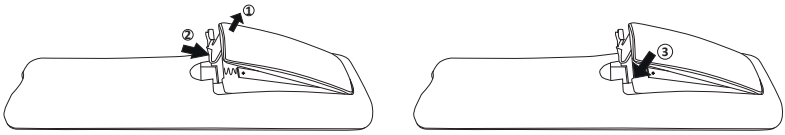

1. Open the battery compartment.
2. Insert two AAA batteries (not included), observing the correct polarity.
3. Close the battery compartment.

CAUTION!

- Remove the batteries if you do not plan to use the remote control for an extended period.
- Do not mix old and new batteries or batteries of different types, such as alkaline and zinc-carbon batteries.
- Keep batteries away from heat sources and direct sunlight.

Charging the Built-in Battery

The device is equipped with a built-in rechargeable battery. When the battery is low, an audible alert will sound to remind you to charge it. To charge the device:

1. Connect the device to a power outlet using the supplied power cord.
2. If the power button lights up red, the battery is charging.
3. When the power button light turns off, the battery is fully charged. Disconnect the power cord to stop charging.

Note: The device can also be charged using a USB Type-C cable.

Turning On the Device

The audio system can operate using either AC power or its built-in rechargeable battery.

- If the device is turned off:
  - Connect the power cord to the device and plug it into a power outlet (if the battery is discharged).
  - Press the power button on the control panel. «HI» will appear on the display, and the device will enter operating mode.
- If the device is in standby mode (the power button lights up green):
  - Press the power button on the control panel or remote control. «HI» will appear on the display, and the device will enter operating mode.

Standby Mode

To switch from operating mode to standby mode, press the power button on the remote control.

By default, the device automatically enters standby mode after 30 minutes of inactivity. You can change this setting:

1. In operating mode, press the « ▶ » button on the control panel twice to open the settings menu. The current standby timer value (30 by default) will start flashing on the display.
2. Turn the volume control to select the desired time before the device enters standby mode. The available range is 5–60 minutes.
3. Press the « ▶ » button to confirm and save the changes.

Turning Off the Device

In standby or operating mode, press and hold the power button on the control panel or remote control to turn off the device.

Note: The power button light will turn off in standby mode.

Automatic Shutdown

If the power button on the control panel or remote control is not pressed for 24 hours while the device is in standby mode, the device will automatically turn off to save energy.

CAUTION! If you do not plan to use the device for an extended period, turn it off and disconnect the power cord.

Lighting

- Press the «SPK» button to cycle through the speaker lighting modes. To turn off the lighting, press the «SPK» button repeatedly until «OFF» appears on the display.
- To change the volume control lighting mode or turn off its lighting, press and hold the «SPK» button. «OFF» will appear on the display when the lighting is turned off.

Playing Audio from External Storage Devices

The audio system supports playback of MP3, WAV, APE, and FLAC audio files from USB storage devices.

1. Connect a USB storage device to the corresponding port on the audio system. The device will automatically switch to USB mode. If a USB storage device is already connected, press the «F» button on the control panel or the «MODE» button on the remote control to select USB mode.
2. Press the « ⏮ », « ⏭ » buttons on the control panel or the « ⏪ », « ⏩ » buttons on the remote control to select a track.
3. Press the « ▶ » button on the control panel or the « ⏯ » buttons on the remote control to start or pause playback.

CAUTION! The USB port is intended only for connecting USB devices and does not support charging. The maximum supported USB storage capacity is 64 GB.

Repeat Playback

CAUTION! This function is available only in USB mode.

- **All tracks (ALL).** Press and hold the «EQ» button until «ALL» appears on the display. The audio system will play all files on the USB storage device in sequence. After the last track finishes, playback will start again from the beginning.
- **Single track (ONE).** Press and hold the «EQ» button until «ONE» appears on the display. The audio system will continuously repeat the current track.
- **Repeat off (OFF).** Press and hold the «EQ» button until «OFF» appears on the display. All tracks will play in sequence without repeating.

Playing Audio via an Audio Cable

1. Press the «F» button on the control panel or the «MODE» button on the remote control repeatedly until «AUX» appears on the display.
2. Connect the audio system to an external device using the supplied 3.5 mm audio cable.
   CAUTION! Turn off the device before connecting the cable to prevent unexpected noise.
3. Start playback on the external device. In AUX mode, playback can only be controlled from the audio source.

FM Radio Mode

1. Insert the 3.5 mm audio cable plug into the AUX input.
2. Press the «F» button on the control panel or the «MODE» button on the remote control to select FM mode.
3. Press the « ▶ » button on the control panel to start the automatic radio station search.
4. Press the « ⏮ », « ⏭ » buttons on the control panel or the «CH-»/«CH+» buttons on the remote control to switch between radio stations.

Bluetooth Mode

1. Press the «F» button on the control panel or the «MODE» button on the remote control to select Bluetooth mode. Alternatively, press the «BT» button on the remote control once. «BT» will appear on the display. If the device is not paired, the Bluetooth indicator on the display will flash.
2. Enable Bluetooth on the source device. Select «FIERO FRPA-110» from the list of available devices. Once pairing is successful, the Bluetooth indicator on the display will stop flashing.
3. Press the « ⏮ », « ⏭ » buttons on the control panel or the « ⏮⏮ », « ⏭⏭ » buttons on the remote control to control playback. You can also switch tracks using the source device.
4. Press the « ▶ » button on the control panel or the « ⏯ » button on the remote control to start or pause playback.
5. To disconnect the Bluetooth connection, press and hold the « ▶ » button on the control panel or the «BT» button on the remote control until the Bluetooth indicator starts flashing.

Note: No password is required for pairing.

TWS Function

The TWS (True Wireless Stereo) function allows you to connect two devices of the same model for stereo playback.

1. Turn on both devices and switch them to Bluetooth mode.
2. Press the «⊂⊃/TWS» button on the control panel of device **A**. «T-ON» will appear on its display.
3. Press the «⊂⊃/TWS» button on the control panel of device **B**. «T-ON» will also appear on its display.
4. Once the connection is established, «BT» will appear on the display of device **A**, while «TWS» will appear on the display of device **B**.
5. To disconnect the devices, press the «⊂⊃/TWS» button on either device. «T-OF» will appear on the display.

Notes

- An external device can be connected either before or after the TWS connection between the speakers is established.
- No password is required for this function.

Multi-Connection

This function allows multiple devices from the same product series to be connected wirelessly for simultaneous mono playback.

1. Turn on one speaker to use as the main device. Make sure all other speakers are turned off beforehand to avoid confusion.
2. Switch the main speaker to Bluetooth mode and pair it with an external device (see «Bluetooth Mode»).
3. Press and hold the «⛓/TWS» button on the main speaker's control panel to enter multi-connection mode. «C-ON» will appear on the display.
4. Enable Bluetooth mode on the second speaker, but do not pair it with an external device.
5. Press and hold the «⛓/TWS» button on the second speaker. «CSB» will appear on its display.
6. Once the connection is established, both speakers will play music simultaneously. You can connect an unlimited number of speakers in this way.

Notes

- To switch tracks, press the « ⏮ », « ⏭ » buttons on the main speaker's control panel.
- To disconnect an individual speaker, press and hold its «⛓/TWS» button.
- To disconnect the entire multi-connection network, press and hold the «⛓/TWS» button on each speaker.

Bass Boost

Press the «XB» button to boost the bass. The button will start flashing.
Press the «XB» button again to return to normal playback mode. The button will stop flashing.

Equalizer

Press the «EQ» button to cycle through the equalizer modes: FLAT — CLASSICAL — JAZZ — ROCK — POP.

Firmware Version

In AUX mode, press and hold the « ▶ » button on the control panel to display the firmware version. The first two digits indicate the Bluetooth version, while the last two digits indicate the DSP version.

Factory Reset

In AUX mode, press and hold the « ⏮ » button on the control panel for several seconds to restore the factory settings.

Connecting a Microphone/Guitar

1. Connect a microphone/guitar to the corresponding input on the device.
2. Press the «MIC MENU» button on the control panel to cycle through the settings:
   - Press once: «M» will appear on the display. Turn the control knob to adjust the microphone volume.
   - Press twice: «MT» will appear on the display. Turn the control knob to adjust the microphone treble level.
   - Press three times: «MB» will appear on the display. Turn the control knob to adjust the microphone bass level.
   - Press four times: «E» will appear on the display. Turn the control knob to adjust the microphone echo level.
   - Press five times: «R» will appear on the display. Turn the control knob to adjust the microphone reverb level.
   - Press six times: «G» will appear on the display. Turn the control knob to adjust the guitar volume.

Using the Microphone

The microphone supplied with the device is wireless. When using it for the first time, turn on the microphone before turning on the audio system.

Changing Voice Pitch

- Press the «VOICE+» button to increase the pitch of your voice.
- Press the «VOICE-» button to decrease the pitch of your voice.
- To reset the voice pitch settings, press and hold the «VOICE+» or «VOICE-» button for several seconds.

Vocal Reduction

Press the «VOCAL» button to reduce the volume of vocals in a track while keeping the instrumental accompaniment. Press the button again to restore the original sound.

Microphone Priority

- Press the «PRI» button to give the microphone priority over music, reducing the background music volume.
- Press the button again to disable this function.

CAUTION!

- To prevent unwanted noise and damage to the audio system, do not hold the microphone directly in front of the speaker.
- For better voice pickup, hold the microphone 5–15 cm from your mouth at a 45° angle.
- When the microphone battery is low, the sound may become distorted.

Specifications

- Model: FRPA-110.
- Trademark: Fiero.
- RMS output power: 60 W.
- Number of channels: 2.
- Woofer driver: 125 × 105 mm / 4", 4 Ω × 2.
- Tweeter driver: 38.1 mm / 1.5", 6 Ω × 2.
- Frequency response: 40 Hz — 20 kHz.
- Signal-to-noise ratio: ≥ 70 dB.
- Total harmonic distortion (THD): ≤ 1%.
- Bluetooth version: 5.3.
- Wireless standard: IEEE 802.15.1.
- Operating frequency: 2402–2480 MHz.
- Transmitter power: < 11 dBm.
- Bluetooth profiles: A2DP v1.3, AVRCP v1.6, HFP v1.7, AVCTP v1.4, AVDTP v1.3, SPP v1.2.
- Bluetooth codecs: SBC, AAC.
- Wireless range: 10 m.
- TWS support.
- Multi-connection support*.
- Connectors: 6.3 mm jack × 2, 3.5 mm jack, USB.
- USB storage playback.
- Supported file systems: FAT16, FAT32, exFAT.
- Supported file formats: MP3, WAV, APE, FLAC.
- Maximum supported USB storage capacity: 64 GB.
- Built-in FM receiver.
- FM frequency range: 87.5–108 MHz.
- Power supply: 110–240 V ~ 50–60 Hz (AC); 5 V ⎓ 2 A (DC).
- Built-in battery: Li-ion, 11.1 V, 4000 mAh.
- Battery life at medium volume: Up to 4 hours.
- Battery life at maximum volume: Up to 2 hours**.
- Charging time via power cord: Up to 3 hours.
- Charging time via USB Type-C cable: Up to 7 hours.
- Device weight: 5.150 kg.
- Device dimensions: 210 × 210 × 425 mm.
- Power cord attachment type: X.
- Protection class: II.
- IP code: IPXX.
- Scope of application: Domestic.
- Package contents: Device, remote control, microphone, 3.5 mm jack — 3.5 mm jack cable, USB-A — USB-C cable, power cord, user manual.

---

* The multi-connection function allows more than 100 devices from the Hipe series to be connected into a single system.

** Playback time depends on the volume level and the characteristics of the music being played.

Troubleshooting Guide

Issue	Solution
The device does not turn on	Make sure the power cord is securely connected to the device and the power outlet
	Connect the device to another working power outlet
	Contact an authorized service center
No sound or very low volume	Check the volume settings on both the audio system and the source device. Increase the volume if necessary
	Make sure the audio source is properly connected to the audio system
The remote control does not work	Before using the remote control, select an input source using the control panel
	Move the remote control closer to the device
	Check that the batteries are installed correctly
	Replace the batteries with new ones
No audio playback from USB	The number of folders or files on the USB device exceeds the supported limit. Reduce the number of folders or use another USB storage device
	No supported audio files were found. Use MP3, WAV, APE, or FLAC files
USB device not supported	Check the capacity of your USB storage device. It must not exceed 64 GB
	Check whether the files on the USB storage device are supported
	The USB device is incompatible with the audio system. Try connecting another device
Poor FM radio reception	Increase the distance between the audio system and the TV
	Make sure the AUX cable is securely connected
	Place the device in an open area to improve radio reception

If the steps above do not resolve the issue, contact an authorized service center.

Rules and Conditions for Installation, Storage, Transportation, Sale (Distribution), and Disposal

- The device does not require installation or permanent mounting.
- The device must be stored in its original packaging, on heated premises, both at the manufacturer's and at the consumer's sites. The ambient temperature should be between +5 °C and +40 °C, and the relative humidity should not exceed 80% (non-condensing). The storage area must be free from aggressive contaminants (e.g., acid or alkali vapors) that could cause corrosion.
- The device must be transported under dry conditions.
- The device requires careful handling. Protect it from exposure to dust, dirt, impact, moisture, fire, and other hazards.
- Sale or distribution of the device must be carried out in accordance with local legislation.
- Upon expiration of the device's service life, it must not be disposed of with unsorted household waste. Instead, it must be taken to an authorized collection point for electrical and electronic equipment for subsequent recycling and disposal in accordance with federal or local legislation. By ensuring proper disposal of this product, you help conserve natural resources and prevent potential harm to the environment and human health that may result from improper handling. For more detailed information about collection and disposal points for this product, please contact your local municipal authorities or your household waste disposal service.
- If a device malfunction is detected, immediately contact an authorized service center or dispose of the device.

Warranty Information

The manufacturer guarantees the device will function properly throughout the warranty period and be free from defects in materials and assembly. The warranty period commences on the date of purchase and applies to new products only. Warranty service includes free repair or replacement of defective parts that fail during the warranty period, provided the failure is not caused by consumer misuse and the product is operated in accordance with the user manual. Repairs or part replacements shall be performed at authorized service centers.

Warranty Period: 12 months
Service Life: 24 months

For the up-to-date list of authorized service centers, please visit:
https://www.dns-shop.ru/service-center/

Additional Information

Manufacturer: Guangzhou Jie Li Electron Co., Ltd.
No.5 Xinkekejiayuanxing Road, Jiahe Street, Baiyun District, Guangzhou City, Guangdong Province, P.R.China.

Made in China.

The product meets the requirements of the technical regulations of the TR CU (EAEU).

Product specifications, information and appearance are subject to change without prior notice, for quality improvement of our products.

Production date (mm.yyyy):_____V.1


Fiero