User Manual

Cordless Drill Driver
OneBase CDBR35K

FinePower

Contents

Intended Use 3
Safety Precautions 3
Workplace Safety 3
Electrical Safety 3
Personal Safety 3
Device Operation Safety Precautions 4
Service Life 4
List of Critical Failures 5
Possible Erroneous Actions by Personnel 5
Limit State Criteria 5
Rechargeable Battery Guidelines (Li-pol/Li-ion) 5
Device Diagram 7
Operating Instructions 8
Inserting and Removing Bits 8
Rotation Direction 8
Torque Adjustment 8
Belt Clip 8
LED Light 8
Operating Recommendations 9
Specifications 9
Battery and Charger Operation 10
Battery Charging 10
Package Contents 11
Maintenance and Care 11
Rules and Conditions for Installation, Storage, Transportation, Sale (Distribution), and Disposal 12
Warranty Information 13
Additional Information 13

Dear Customer,

Thank you for choosing our products.
We are pleased to offer you appliances and devices designed and manufactured to the highest standards of quality, functionality, and design. Before using the device, please read this manual carefully. It contains important information regarding your safety, as well as recommendations for the proper use and care of the product. Please keep this manual in a safe place and use it as a reference guide during future operation of the product.

Intended Use

The cordless drill driver is designed for driving screws and drilling holes in metal, wood, and plastic.

Safety Precautions

Workplace Safety

- The workplace must be well-lit and kept clean. Cluttered or poorly lit work areas can lead to accidents.
- Do not operate this power tool in explosive atmospheres containing flammable liquids, gases, or dust. During operation, as well as when turning the tool on and off, it generates sparks that can ignite dust or vapors.
- Keep children and bystanders away from your work area while operating the power tool. Distractions can cause you to lose control.

Electrical Safety

- Take necessary precautions against electric shock. Avoid body contact with grounded surfaces such as pipes, radiators, and refrigerators.
- Protect the power tool from moisture, rain, and dampness. Water entering the power tool increases the risk of electric shock.

Personal Safety

- Stay alert, watch what you are doing, and use common sense when operating the power tool. Do not use the power tool while tired or under the influence of drugs, alcohol, or medication. A moment of inattention while operating power tools may result in serious personal injury.
- Use personal protective equipment (safety glasses, non-slip footwear, hard hat, or hearing protection) depending on the type of work being performed to reduce the risk of injury.
- Dress properly. Do not wear loose clothing or jewelry. Keep your hair, clothing, and gloves away from moving parts.
- Prevent unintentional starting. Ensure the switch is in the off-position before connecting to a power source and/or battery pack. Do not carry the tool with your finger on the switch.
- Remove any adjusting key or wrench before turning the power tool on. A wrench or a key left attached to a rotating part of the power tool may result in personal injury.
- Do not overreach. Keep proper footing and balance at all times. This enables better control of the power tool in unexpected situations.

- If the power supply is interrupted or the tool shuts down unexpectedly, turn it off immediately. If the machine remains switched on during a power failure, it may restart automatically when power is restored, which could cause injury or property damage.
- Failure to follow operating and safety rules may result in electric shock, fire, and/or serious injury. The manufacturer and its authorized representatives are not liable for damage caused by using the tool in violation of this manual's requirements.

Device Operation Safety Precautions

- Use tools, accessories, bits, etc., in accordance with these instructions, taking into account the actual working conditions. Using the power tool for operations different from those intended could be hazardous.
- Do not use the tool if the switch does not turn it on and off.
- This device is not intended for use by children or persons with reduced physical, sensory, or mental capabilities, unless they are supervised by a person responsible for their safety. Do not allow children to play with the device.
- Ensure that the moving parts of the tool are securely fixed and in good working order. If the tool is damaged, it must be repaired.
- Charge the battery only with the charger specified by the manufacturer. A charger that is suitable for one type of battery pack may create a risk of fire when used with another battery pack.
- Disconnect the power when inserting or removing battery packs.
- Before setting the tool aside after work, turn it off and wait for the rotating parts to come to a complete stop.
- Keep the charger free of dust and dirt.
- Servicing must be performed by qualified personnel using original spare parts. This ensures the safety of the power tool.
- Hold the power tool by insulated gripping surfaces when performing an operation where the cutting accessory may contact hidden wiring. Cutting accessories contacting a «live» wire may make exposed metal parts of the power tool «live» and could give the operator an electric shock.
- Use only serviceable and undamaged accessories that are free from defects, cracks, chips, and any other damage.
- Ensure that the drill bit can drill through the workpiece without damaging the underlying surface.
- Do not touch the bit immediately after turning off the tool.
- Do not place your hands under the workpiece being processed.
- Do not remove sawdust or shavings near the bit with your hands.
- Finish the work and turn off the tool before getting distracted.
- Regularly check the bolted connections of the power tool.
- This device is not intended for commercial use.

Service Life

The service life of the product is 4 years.
The specified service life is valid provided the consumer complies with the requirements of this manual.

List of Critical Failures

- Do not use if there is heavy sparking.
- Do not use if severe vibration occurs.
- Do not use with a cut or exposed power cable.
- Do not use if smoke appears directly from the product housing.

Possible Erroneous Actions by Personnel

- Do not use with a damaged handle or damaged protective guard.
- Do not use outdoors in the rain.
- Do not turn on if water has entered the housing.

Limit State Criteria

- The product housing is damaged.

Rechargeable Battery Guidelines (Li-pol/Li-ion)

Dear Customer, please note that this device uses a lithium-based rechargeable battery as its power source. Please carefully read the information below to help extend the life of your battery and prevent undesirable consequences during its operation.

Battery Capacity and Charge-Discharge Cycles

During prolonged storage and use, the rechargeable battery (hereinafter referred to as «the battery») tends to lose its charge and capacity. After 300 charge-discharge cycles (approximately one year of device use), the battery capacity may decrease to 80% of its nominal value. After 400 charge-discharge cycles, the battery capacity may decrease to 60% of its nominal capacity. Partial capacity reduction within these limits and time frames is natural battery wear and is not considered a defect.

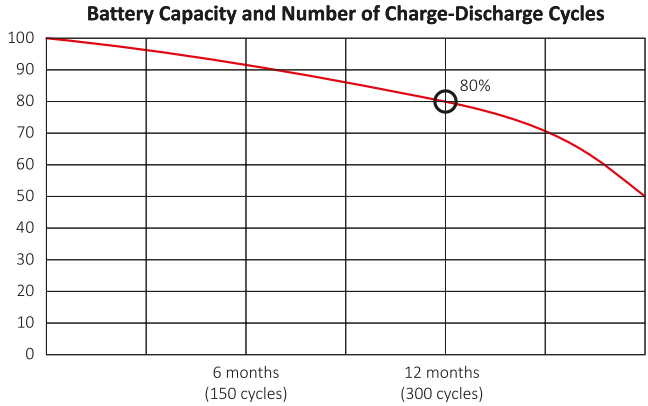

Natural Battery Wear

The battery loses charge even when stored separately from the device. The self-discharge rate is approximately 5% per month. Due to their design, batteries are not durable and constantly degrade regardless of whether they are in use. This degradation

accelerates at higher temperatures and when the charge level deviates from the «optimal» storage level, which is generally considered to be 40%. In other words, if the battery is not in use, it is advisable to keep the charge level between 40% and 50%.

Use Only the Original Charger

The battery's charge and discharge capability is controlled by its built-in Battery Management System (BMS). Forced «fast charging» modes using external chargers for Li-ion batteries are strictly not recommended, as charge and discharge currents are limited. Li-ion batteries do not have a so-called «memory effect». You can start charging or discharging the battery from any charge level.
Most devices have charge and discharge limits—the controller may prevent the battery charging if, for example, the charge is already above 90%. It will also prevent the battery from fully discharging, protecting the cells from damage. Even if the device is powered by the electrical grids, the Li-ion battery should undergo a full charge/discharge cycle at least once a month (until the «low battery» warning appears). Never let the battery discharge completely. A Li-ion battery degrades quickly if stored in a discharged state for a prolonged period. If this happens, charge it immediately. If the battery remains in a discharged state for two weeks or more, irreversible capacity loss occurs in the cells, which will ultimately lead to battery failure.

Observe the Temperature Requirements

Batteries must be stored in a charged state at temperatures between +15 °C and +35 °C with normal humidity. Batteries do not perform well during prolonged operation in very high (above +40 °C) or very low (below -10 °C) ambient temperatures. Do not leave the battery in direct sunlight.

Do Not Disassemble, Burn, or Use Damaged Batteries

Under no circumstances should you attempt to disassemble the battery or charge its individual cells. For repair or maintenance, please contact an authorized service center. Puncturing or crushing the cells can cause an internal short circuit, leading to fire and explosion. Melting of lithium due to high temperatures can also cause an explosion. If the seal is broken, water or condensed atmospheric moisture can enter the cell, potentially triggering a reaction that releases hydrogen and causes a fire. You can check the current battery status using the battery indicator, which is available on almost all devices (please check its location and operation method at the time of purchase).

CAUTION!

- Be careful — damaged batteries may release harmful substances.
- If the battery is replaceable (removable), and you discover problems with its performance, contact a service center (see the warranty period in the warranty information). If the battery is built-in (an integral part of the device), the warranty applies to the device itself. You should also contact a service center. The sooner you bring a malfunctioning battery in for repair, the more likely it can be restored with minimal cost.
- Battery operating time depends on many other factors, and the actual operating time may differ from the stated value.
- Rechargeable batteries have a limited number of charge cycles and may eventually need replacement (see the limited warranty conditions for the battery in the warranty information). Battery operating time depends on the usage mode and settings.

Device Diagram

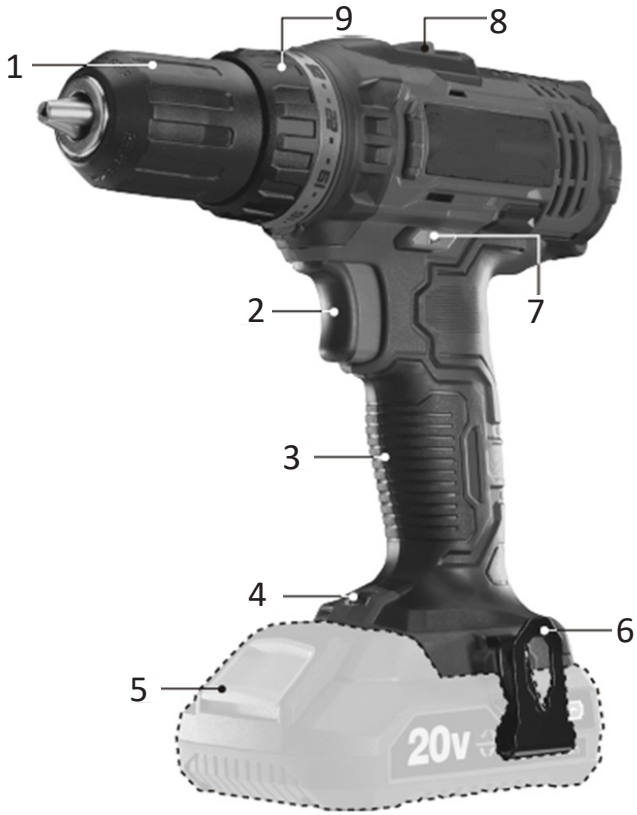

1. Keyless chuck.
2. Power button.
3. Handle.
4. LED light.
5. Battery.
6. Belt clip.
7. Rotation direction switch.
8. Speed selector.
9. Torque adjustment ring.

Operating Instructions

Inserting and Removing Bits

Insert the bit into the chuck until it stops, then gently tighten the chuck (1).

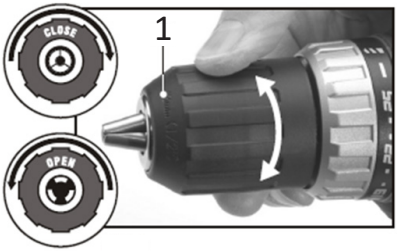

Rotation Direction

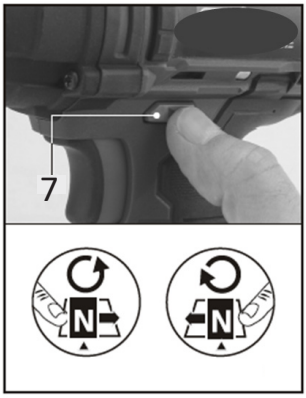

The device is equipped with a rotation direction switch.

- Move the switch to the left to set clockwise rotation.
- Move the switch to the right to set counterclockwise rotation.
- Move the switch to the neutral position to lock the power button.

After setting the rotation direction, turn on the tool by pressing the «Power» button. The speed increases as pressure on the switch increases. Release the button to turn off the tool.

Note: Never move the switch to another position until the bit has come to a complete stop.

Torque Adjustment

The tool is equipped with a torque adjustment ring. Choose the appropriate setting depending on the material hardness, screw size, and purpose of the bolted connection. You can also set the speed using the speed selector:

- First speed (low) is suitable for screwdriving mode.
- Second speed (high speed with low torque) is suitable for drilling holes.

Belt Clip

The clip allows for convenient carrying of the device on a belt.
Before use, ensure that the clip is securely fastened to the device with a screw.

LED Light

The LED light source is designed for working in poorly lit areas. When the device is turned on, the LED lights up automatically.

Operating Recommendations

1. To avoid cracks around the hole being drilled in wood, place a piece of wood under the workpiece (A).
2. This device is also intended for working with mild steel, aluminum, and copper. Before drilling, mark the hole on the workpiece by making a small indentation in the metal (B). Apply oil to the drilling area to facilitate the work and extend the drill bit's service life (C).

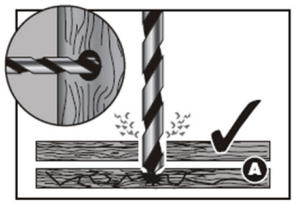

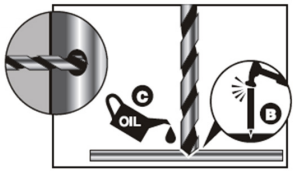

Specifications

Model	CDBR35K
Trademark	FinePower
Voltage (V)	20
Speed (rpm)	0–400 / 0–1400
Torque settings	25 + 1
Max. torque (Nm)	35
Chuck type	Keyless
LED light	Yes
Sound pressure level LpA (K=3), dB(A)	64.4
Sound power level LwA (K=3), dB(A)	75.4
Vibration level during operation (K=1.5), m/s²	5.45
Cord type (charger)	Y
Protection class	III
Scope of application	Domestic

Battery and Charger Operation

CAUTION! Use only accessories compatible with this power tool.

Li-ion battery	Finepower OneBase B20 / Finepower OneBase B40 / Finepower OneBase B60 / FinePower OneBase S40 / FinePower OneBase S80
Charger	Finepower OneBase C124 / Finepower OneBase C135 / Finepower OneBase C230 / FinePower OneBase C180S

Battery Charging

1. Disconnect the battery from the power tool. To do this, press the lock button on the battery and carefully remove it from the power tool.



Lock button

2. Connect the charger to the power supply. The indicator will light up green.
3. Insert the battery into the charger and ensure the connection is correct.
4. The indicator will glow red, indicating that charging is in progress.
5. When charging is complete, the indicator will light up green. Disconnect the charger from the power supply and remove the battery.

CAUTION! When disconnecting the charger from the power supply, do not pull the cord.



1. Charged.
2. Charging.

Battery	Nominal* battery runtime
B20 2.0 Ah	45 min
B40 4.0 Ah	90 min
B60 6.0 Ah	130 min
S40 4.0 Ah	90 min
S80 8.0 Ah	180 min

* Approximate device operating time with a fully charged battery under light load conditions.



Charge level indicator	Charge remaining
Green Orange Red	75–100%
Orange Red	25–50%
Red	10–25%

Package Contents

- Cordless drill.
- Li-ion battery B20 2.0 Ah (2 pcs)*.
- Charger C124*.
- Metal drill bits, ø: 2 mm, 2.5 mm, 3 mm, 4 mm, 5 mm, 6 mm.
- Bits: PH1 / PH2 / PZ1 / PZ2 / SL5 / SL6.
- Magnetic bit holder.
- Case.
- User manual.

Maintenance and Care

CAUTION!

- Before performing any inspection or maintenance work, always ensure that the tool is turned off and the battery is removed.
- It is forbidden to use gasoline, naphtha, thinner, alcohol, etc. This may lead to discoloration, deformation, and cracking.

Repairs, any other maintenance, or adjustments must be performed at authorized service centers.

Wipe the device with a soft, damp cloth. Do not use aggressive detergents. Do not expose the tool to moisture.

* Availability, model, and quantity depend on the delivery package.

Rules and Conditions for Installation, Storage, Transportation, Sale (Distribution), and Disposal

- This device requires no assembly or mounting.
- The device must be stored in its original packaging, on heated premises, both at the manufacturer's and at the consumer's sites. The ambient temperature should be between +5 °C and +40 °C, and the relative humidity should not exceed 80% (non-condensing). The storage area must be free from aggressive contaminants (e.g., acid or alkali vapors) that could cause corrosion.
- The device must be transported in a dry place.
- The device requires careful handling. Protect it from exposure to dust, dirt, impact, moisture, fire, and other hazards.
- Sale or distribution of the device must be carried out in accordance with local legislation.
- Upon expiration of the device's service life, it must not be disposed of with unsorted household waste. Instead, it must be taken to an authorized collection point for electrical and electronic equipment for subsequent recycling and disposal in accordance with federal or local legislation. By ensuring proper disposal of this product, you help conserve natural resources and prevent potential harm to the environment and human health that may result from improper handling. For more detailed information about collection and disposal points for this product, please contact your local municipal authorities or your household waste disposal service.
- If a device malfunction is detected, immediately contact an authorized service center or dispose of the device.

Warranty Information

The manufacturer guarantees the device will function properly throughout the warranty period and be free from defects in materials and assembly. The warranty period commences on the date of purchase and applies to new products only. Warranty service includes free repair or replacement of defective parts that fail during the warranty period, provided the failure is not caused by consumer misuse and the product is operated in accordance with the user manual. Repairs or part replacements shall be performed at authorized service centers.

Warranty Period: 24 months
Service Life: 48 months

For the up-to-date list of authorized service centers, please visit:
https://www.dns-shop.ru/service-center/

Additional Information

Manufacturer: Ningbo Liangye Electric Appliances Co., Ltd.
Qianhouchen Village, Yunlong Town, Yinzhou District, Ningbo City, Zhejiang, China.

Made in China.

The product meets the requirements of the technical regulations of the TR CU (EAEU).

Product specifications, information and appearance are subject to change without prior notice, for quality improvement of our products.

Production date (mm.yyyy):_____v.1

FinePower