SNOWSKY

快速入门指南

Quick Start Guide

ECHO NANO

Buttons and ports labeled

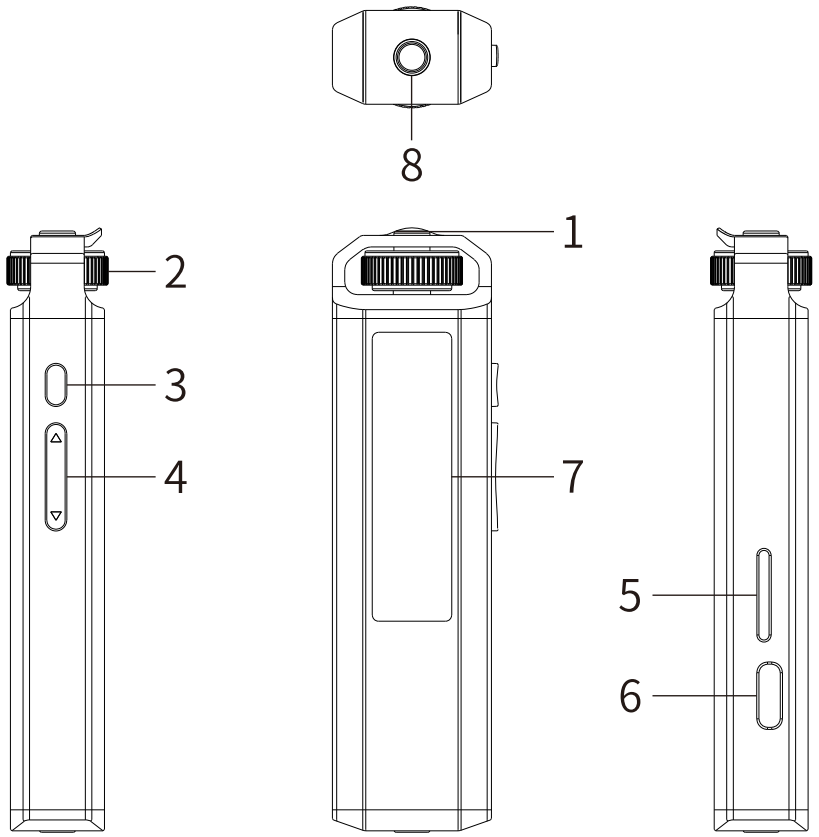

1.Power button:Power on/off, Turn on/off display, Lockscreen
2.Volume knob:Volume adjustment
3.Play/Pause:Play/Pause, Confirm
4.Previous/Next Track Buttons: Switch tracks, Switch menu
5.microSD card slot:Store microSD card
6.USB Type-C port:Charging/Data transfer
7.Display
8.3.5mm SE headphone out

Operation function explained

Power on/off: Hold the Power button for about 3s to turn on/off the device.

Adjust volume: Rotate the Volume knob to adjust the volume.

Switch songs: Short press the Previous/Next track button to switch songs.

Fast forward/Rewind: On the playing page, long press the Previous/Next track button to fast forward/rewind.

Play/Pause: Short press the Play/Pause button to start or pause the playback.

Return: Long press the Play/Pause button to return to the previous operation.

Delete: In the file browser, selecting the song and double press the Play/Pause button will call up a prompt window with deletion.

Switch/Confirm menu: On the menu page, short press the Previous/Next track button to switch submenus, and short press the Play/Pause button to confirm.

Lockscreen: Double press the Power button to lock the screen.

Menu page

File browser: Check storage and files of microSD card.

Library: Music library, classified files and songs can be found.

Music playing: Enter the music playing page.
Music settings: Set the music loop mode, volume limit, EQ style, filter type, etc.
System settings: Support settings of system language, screen on/off timer, screen roration, etc.

Notes and precautions

★Please do not put the battery in a high-temperature environment. The battery is prohibited from use if it is soaked in water, or if it gets swollen. Please do not disassemble, hit, crush, or puncture the battery, and do not put it on fire.
★Please do not place the device in circumstances of excessive high/low temperatures (above 45°C or below 0°C), or in an enclosed high-temperature environment, such as in a car.
★Do not replace with a battery pack of the wrong model to avoid the risk of fire or explosion.
★Please do not repair or disassemble the product on your own and do not put it near water.
★Please charge the battery on a regular basis to secure the battery life if this product has not been used for a long time.
★You might not be able to hear the sound of the surroundings when using headphones. For your safety, please avoid using headphones in dangerous situations.

★It is recommended to use a suitable charger in case of a high-voltage/low voltage adapter causing damage to the device.

★In the unlikely event that the device hangs up, please try to long press the Power button for about 10s to reset it, and then force a reboot.

To learn more

1. To learn more about the product, please visit our website:
   http://www.fiio.com/supports
2. Scan the QR codes to visit:

FIIO website

FIIO facebook

・Note:Due to continuous improvement, each specification and design are subject to change at any time without further notice.

WEEE Directive & Product Disposal



At the end of its serviceable life, this product should not be handed as household or general waste. It should be handed over to the applicable collection point for the recycling of electrical and electronic equipment, or returned to the supplier for disposal.

Internal/Supplied Batteries:
This symbol on the battery indicates that the battery is to be collected separately. This battery is designed for separate collection at an appropriate collection point.

Hereby, Guangzhou FIIO Electronics Technology Co., Ltd. declares that this device is in compliance with Directive 2014/53/EU. The full text of the EU declaration of conformity is available at: www.fiio.com/doc

CE

广州飞傲电子科技有限公司

Guangzhou FIIO Electronics Technology Co., Ltd.