KENSHI

User Manual

Mobile phone Flip 241

Contents

Intended Use....3
Safety Precautions....3
Rechargeable Battery Guidelines (Li-pol/Li-ion)....6
Device Diagram....10
Specifications....12
Package Contents....13
Key Functions....13
Getting Started....14
SIM Cards and Memory Card....14
Installing SIM Cards and Memory Card....15
Access Codes....15
Charging....16
Powering On and Off....17
Network Connection....17
Main Menu....17
Messages....17
Contacts....19
Call Log....19
Settings....20
Multimedia....22
My Files....23
Profiles....24
Audio Player....24
Games....24
FM Radio....24
Calendar....25
Organizer....25
Additional Features....26
Rules and Conditions for Installation, Storage, Transportation, Sale (Distribution), and Disposal....27
Warranty Information....28
Additional Information....28

Dear Customer,

Thank you for choosing our products.
We are pleased to offer you appliances and devices designed and manufactured to the highest standards of quality, functionality, and design. Before using the device, please read this manual carefully. It contains important information regarding your safety, as well as recommendations for the proper use and care of the product. Please keep this manual in a safe place and use it as a reference guide during future operation of the product.

Intended Use

The mobile phone is intended for making and receiving phone calls, as well as sending and receiving text messages via cellular network.

Safety Precautions

- Do not expose the device to electromagnetic radiation.
- To prevent hearing damage, use headphones at safe volume levels.
- Use only a compatible power adapter and cable to charge the device. Using an incorrectly selected power adapter, cable, or charging attachments may damage the device.
- Always charge the phone in well-ventilated areas. Do not charge or discharge the device in locations where heat dissipation is restricted, such as in a trouser pocket, a closed bag, on a bed or sofa. Ensure that the device is not covered by clothing, pillows, bedding, or other objects..
- Do not store the device at excessively high or low temperatures. Protect the device from dust, moisture, and direct sunlight.

- Follow local laws and do not use the device in restricted areas (e.g., during airplane takeoff and landing, near medical equipment, etc., as it may cause interference).
- Do not use the device after it has been dropped, or if there is visible damage, a swollen battery, or malfunctions.
- Fully charge the device before first use. The device reaches its full performance only after 2–3 full charge and discharge cycles.
- Familiarise yourself with applicable laws and regulations that restrict the use of mobile phones in certain situations and locations.
- This device is not intended for use by persons (including children) with reduced physical, sensory or mental capabilities, or lack of experience and knowledge, unless they have been given supervision or instruction concerning use of appliance by a person responsible for their safety. Children should be supervised to ensure that they do not play with the device.
- Keep all packaging materials (plastic bags, foam padding, etc.) out of reach of children. Packaging materials can present a hazard to children.
- Do not use the phone at gas stations or in potentially explosive atmospheres, including fueling areas, enclosed spaces on boats, fuel or chemical storage depots or vehicles transporting them, as well as in areas where the air may contain chemicals or fine particles such as grain, dust, or metal powders. Observe all signs prohibiting the use of wireless devices (phone or other radio equipment). Turn off the mobile phone or wireless device in blasting areas, and in areas where signs prohibit the use of two-way radios or electronic devices to avoid possible interference.

- Do not use the mobile phone in hospital operating rooms, emergency rooms, or intensive care units. Follow all rules and regulations in hospitals and medical centers. If you use a personal medical device, consult your doctor and the device manufacturer to determine if the phone will interfere with your device. To avoid potential interference with a pacemaker, always maintain a minimum distance of 15 cm between it and the mobile phone. To do this, hold the phone to the ear opposite the side of the pacemaker and do not carry it in a breast pocket. To avoid interference with medical equipment, do not use the phone near hearing aids, cochlear implants, or other similar devices.
- Observe safety regulations on the airplane and turn off the phone when required.
- While driving, use the phone in accordance with applicable laws and traffic regulations.
- To avoid the risk of lightning strike, do not use the phone outdoors during a thunderstorm.
- Do not use the phone for calls while it is charging.
- Do not use the phone in high-humidity environments, such as bathrooms. This may result in electric shock, injury, fire, or damage to the charger.
- Protect the device from impacts, drops, vibrations, and other mechanical stress.
- This device complies with all electromagnetic safety standards. Nevertheless, if you use a pacemaker or other electrical implants (e.g., an insulin pump), consult your physician for additional advice.
- Do not immerse the phone or the charger in water or other liquids to avoid electric shock and injury.
- Never attempt to disassemble or repair the phone yourself. This must be performed by a qualified technician. Failure to comply with this condition will void the warranty.
- This device is not intended for commercial use.

Rechargeable Battery Guidelines (Li-pol/Li-ion)

Dear Customer, please note that this device uses a lithium-based rechargeable battery as its power source. Please carefully read the information below to help extend the life of your battery and prevent undesirable consequences during its operation.

Battery Capacity and Charge-Discharge Cycles

During prolonged storage and use, the rechargeable battery (hereinafter referred to as «the battery») tends to lose its charge and capacity. After 300 charge-discharge cycles (approximately one year of device use), the battery capacity may decrease to 80% of its nominal value. After 400 charge-discharge cycles, the battery capacity may decrease to 60% of its nominal capacity. Partial capacity reduction within these limits and time frames is natural battery wear and is not considered a defect.

Natural Battery Wear

The battery loses charge even when stored separately from the device. The self-discharge rate is approximately 5% per month. Due to their design, batteries are not durable and constantly degrade regardless of whether they are in use. This degradation accelerates at higher temperatures and when the charge level deviates from the «optimal» storage level, which is generally considered to be 40%. In other words, if the battery is not in use, it is advisable to keep the charge level between 40% and 50%.

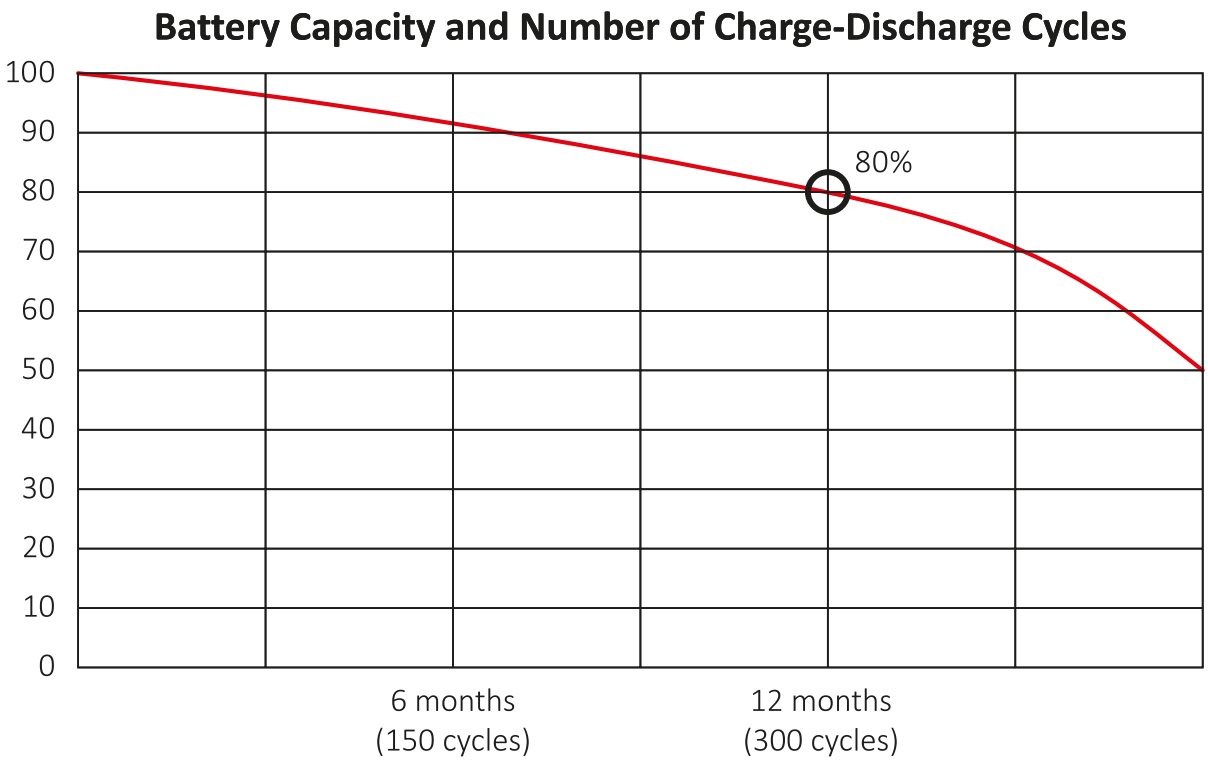

Use Only the Original Charger

The battery's charge and discharge capability is controlled by its built-in Battery Management System (BMS) . Forced «fast charging» modes using external chargers for Li-ion batteries are strictly not recommended, as charge and discharge currents are limited.

Li-ion batteries do not have a so-called «memory effect» You can start charging or discharging the battery from any charge level.

Most devices have charge and discharge limits—the controller may prevent the battery charging if, for example, the charge is already above 90%. It will also prevent the battery from fully discharging, protecting the cells from damage. Even if the device is powered by the electrical grids, the Li-ion battery should undergo a full charge/discharge cycle at least once a month (until the «low battery» warning appears).

Never let the battery discharge completely. A Li-ion battery degrades quickly if stored in a discharged state for a prolonged period. If this happens, charge it immediately.
If the battery remains in a discharged state for two weeks or more, irreversible capacity loss occurs in the cells, which will ultimately lead to battery failure.

Observe the Temperature Requirements

Batteries must be stored in a charged state at temperatures between +15 °C and +35 °C with normal humidity. Batteries do not perform well prolonged operation in very high (above +40 °C) or very low (below -10 °C) ambient temperatures. Do not leave the battery in direct sunlight.

Do Not Disassemble, Burn, or Use Damaged Batteries

Under no circumstances should you attempt to disassemble the battery or charge its individual cells. For repair or maintenance, please contact an authorized service center.
Puncturing or crushing the cells can cause an internal short circuit, leading to fire and explosion. Melting of lithium due to high temperatures can also cause an explosion. If the seal is broken, water or condensed atmospheric moisture can enter the cell, potentially triggering a reaction that releases hydrogen and causes a fire. You can check the current battery status using the battery indicator, which is available on almost all devices (please check its location and operation method at the time of purchase).

CAUTION

- Be careful — damaged batteries may release harmful substances.
- If the battery is replaceable (removable), and you discover problems with its performance, contact a service center (see the warranty period in the warranty information). If the battery is built-in (an integral part of the device), the warranty applies to the device itself. You should also contact a service center. The sooner you bring a malfunctioning battery in for repair, the more likely it can be restored with minimal cost.
- Battery operating time depends on many other factors, and the actual operating time may differ from the stated value.
- Rechargeable batteries have a limited number of charge cycles and may eventually need replacement (see the limited warranty conditions for the battery in the warranty information). Battery operating time depends on the usage mode and settings.

Device Diagram

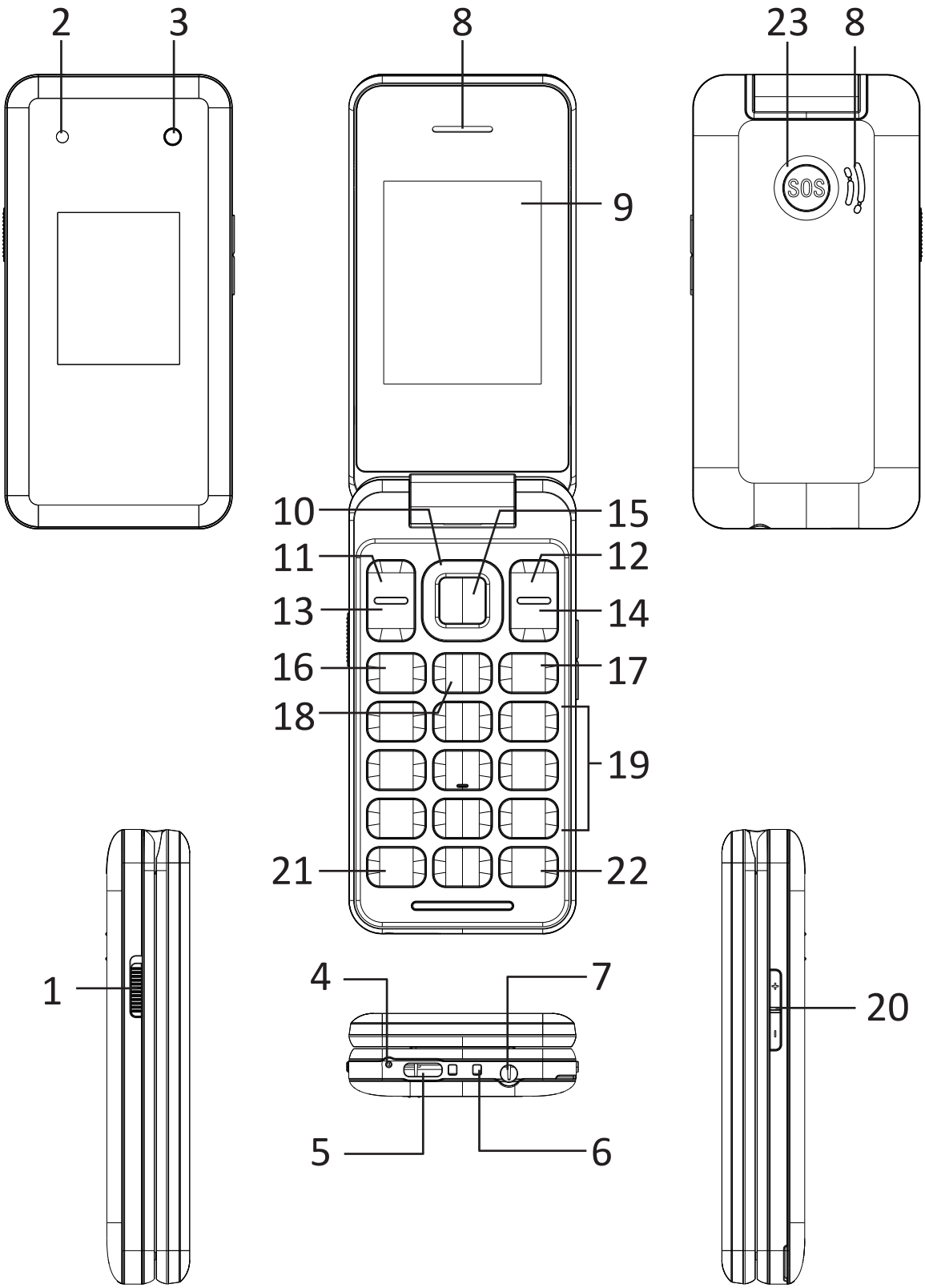

1. Flashlight switch.
2. Camera.
3. Flash / Flashlight.
4. Microphone.
5. Type-C charging port.
6. Docking station charging port.
7. Headphone jack.
8. Speaker.
9. Screen.
10. Navigation keys (up key, down key, left key, right key).
11. Left function key.
12. Right function key.
13. Call key.
14. End call key.
15. «OK» key.
16. «M1» key.
17. «M2» key.
18. FM radio key.
19. Alphanumeric keys.
20. Volume keys.
21. «*» key.
22. «#» key.
23. «SOS» key.

Specifications

- Model: Flip 241.
- Trademark: KENSHI.
- Power adapter specifications (input): 100–240 V ~50–60 Hz.
- Power adapter specifications (output): 5 V ⎓ 0.5 A.
- Docking station power specifications (input): 5 V ⎓ 0.5 A.
- Docking station power specifications (output): 5 V ⎓ 0.5 A.
- Bluetooth wireless standard: IEEE 802.15.1.
- Operating frequency range: 2402–2480 MHz.
- Transmitter power: 7.5 dBm.
- Screen size: 2.4’’.
- Display resolution: 240 × 320.
- Camera resolution: 0.3 MP.
- Video formats: 3GP, AVI, MP4.
- Audio formats: AMR, MP3, WAV.
- Battery capacity: 1000 mAh.
- N SIM cards: 2.
- SIM format: nano.
- RAM: 32 MB.
- Max. memory card capacity*: 32 GB.
- Cable length: 0.8 m.
- Charging port: Type-C.
- Protection class (device): III.
- Protection class (adapter): II.
- IP code: IPX0.
- Scope of application: Domestic.

* A memory card is required for data storage

Package Contents

- Device.
- Battery.
- Docking station.
- Charger.
- User manual.

Key Functions

- End key: press and hold to turn the phone on/off; during a call — reject/end the call.
- Call key: press in standby mode to open the call log. Accept a call / initiate a call.
- Left function key: in standby mode — unlock / go to menu.
- Right function key: in standby mode — open the contact list.
- Right key / Left key: open the calendar / write a message.
- Up key / Down key: open the camera / open the audio player.
- «OK» key: confirm the selection.
- Navigation keys: navigate through the menu by pressing the Up, Down, Left, or Right keys.
- FM radio key: turns the FM radio function on/off.
- «M1» / «M2» keys — speed dial for the selected contact.
- Alphanumeric keys 0 to 9: press and hold one of the keys to activate speed dial for the phone number assigned to the key. Press and hold the «0» key to turn the power saving mode on/off.
- «*» key: in standby mode, press this key to enter «». To unlock, press the left function key and then «».
- «#» key: in standby mode, press this key to enter «#». Press and hold in standby mode — switch between profiles (Meeting / Silent / General).

Getting Started

SIM Cards and Memory Card

The SIM card contains important information such as your phone number, PIN code (personal identification number), PIN2 code, PUK code (personal unblocking code for the PIN), PUK2 code (personal unblocking code for the PIN2), IMSI (International Mobile Subscriber Identity), network information, contact details from your phone book, and text messages.
After turning off the phone, wait a few seconds before inserting or removing the SIM card. Handle the SIM card with extreme care, as both the card itself and its contacts can easily be scratched or bent.

CAUTION: Using incompatible SIM cards may damage the card or the device, as well as corrupt the information stored on the card.

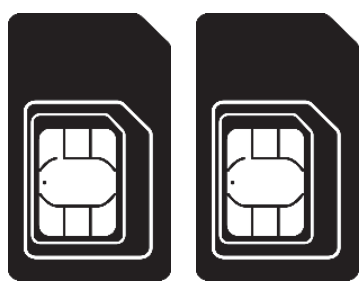

The memory card is a removable storage device inside the phone. Use only compatible microSD memory cards with this device. Other types of memory cards do not fit the microSD card slot and are not compatible with this device.

Keep the phone, its accessories, as well as the SIM card and memory card out of reach of children.

Installing SIM Cards and Memory Card

1. Before installing the SIM card and memory card, make sure to turn off the device and disconnect it from the charger.
2. Open the back cover of the phone by prying it at the notch in the lower left part of the device.
3. Remove the battery.
4. Insert the SIM cards all the way in so that the cut edge aligns with the corresponding side of the SIM card slot, and the gold-colored contacts face down.
5. Open the memory card holder.
6. Place the memory card into the slot with the contacts facing down, and close the memory card cover.
7. Reinstall the battery.
8. Carefully close the back cover.

Access Codes

The phone and SIM card may have multiple passwords designed to ensure security and prevent unauthorized use of the device. When prompted, enter the password, then press the confirmation key. When entering an incorrect password, press the right function key to delete the incorrect password before entering a new one.

Phone Lock

The phone lock password is used to prevent unauthorized use of the device. The default password is 1234.

After locking the phone, you will be required to enter the password to unlock it in order to use various device functions.

PIN Code

The PIN code (personal identification number consisting of 4–8 digits) is used to prevent unauthorized access to your SIM card. The PIN code is provided with the SIM card by the mobile network operator.

If the PIN code verification function is activated, you will be required to enter this PIN code every time you turn on the phone.

CAUTION: After three consecutive incorrect PIN entries, the SIM card becomes blocked. The SIM card can be unblocked using the PUK code.

PUK Code

The PUK code (Personal Unblocking Key, 8 digits) is required to restore a blocked SIM card and is provided with the SIM card by your mobile service provider.

If an incorrect PUK code is entered 10 times in a row, the SIM card will be permanently locked. After this, you will need to contact your mobile network operator to replace the SIM card.

Charging

You can see the battery level in the upper right corner of the phone screen. Before charging, insert the battery into the phone.

1. Connect the charger to the phone.
2. Plug the charger into a power outlet.

CAUTION: Do not remove the battery during charging.

Notes

- The filling battery level indicator means that the device is charging.
- When the indicator stops filling, it means that the device is fully charged.

- To ensure normal operation, use the charger supplied with the device.
- Before first use, charge the battery for at least 4 hours.
- During charging, the battery usually gets warm — this is normal.

Powering On and Off

To turn the phone on or off, press and hold the End call key.
If prompted, enter the PIN code when powering on.

Network Connection

After inserting the SIM card and turning on the phone, the device automatically searches for an available network. After that, the phone enters active mode. The name of the network being used will be displayed on the screen, and you will be able to make outgoing calls and receive incoming ones.

Main Menu

Messages

This menu allows you to read, compose, send, and save text messages. Received messages are saved in the **Inbox** folder. Unsent messages are saved in the **Outbox** folder. Pre-saved but unsent messages are located in the **Drafts** folder. The **Sent** folder contains sent messages, provided that the save sent messages function is enabled in the settings. Enabling/disabling the save sent messages function is configured in **Menu > Messages > Message Settings > Save Sent Message**.
The **Templates** folder contains text message templates. You can use pre-recorded templates for replies or create your own text message variants.

Composing and Sending a Message

1. Select **Menu > Messages > Write Message**.
2. Enter the message text. You can use ready-made reply templates by selecting **Options > Insert Symbol or Options > More > Insert Name/Number**.
3. To send the message, select **Options > Send**.
4. Enter one or more phone numbers in the **Contacts** field.
5. If you do not want to send the message at this time, you can save the composed message as a draft. Select **Options > Save**. The saved message will be located in the **Drafts** folder.

Viewing and Replying to a Message

1. To view a received message, select **Menu > Messages > Inbox**.
2. To reply to a message, open it and select **Options > Reply**.
3. Enter the message text. You can use ready-made reply templates by selecting **Options > Insert Template**.
4. To send the message, select **Options > Send**.

Forwarding a Message

1. Open the view of the message you want to forward.
2. Select **Options > Forward**.
3. To send the message, select **Options > Send**.
4. Enter one or more phone numbers in the **Contacts** field.

Deleting a Message

1. Highlight the message you want to delete in the **Inbox**, **Outbox**, **Drafts**, or **Sent** folder. If you want to delete multiple messages, select **Options > Mark multiple**.
2. Select **Options > Delete**.
3. After confirming your choice, the message will be deleted.

Contacts

You can save a phone number either to the SIM card or to the phone memory. Select a contact in the contact list and perform the following:

- Add Contact: Create a new contact.
- View: View the saved contact name and phone number.
- Send Message: Write a message to the selected contact.
- Edit: Edit the contact information.
- Delete: Delete the current contact.
- Copy: Export contacts from the SIM card and from the phone memory / import a backup from the memory card.
- Move: Move a contact from the SIM card to the phone memory / from the phone memory to the SIM card.
- Add to Blacklist: Add the selected contact to the blacklist.
- Add to Whitelist: Add the selected contact to the whitelist.
- Mark multiple: Highlight multiple contact records.
- Contact Settings: Allows you to perform operations such as moving, copying, deleting all records, backing up and restoring the phonebook. Import contacts to the phone memory, export contacts from the phone memory. Assign a phone number to a numeric key. Press and hold the key for direct call.

Call Log

In the call log, you can view information about missed, dialled, received, and rejected calls. The following options are available for call log entries:

- View: View the details of the current call.
- Call: Call the current number.
- Send Message: Write a message to the selected contact.
- Save Contact: Add a contact to the phone memory or SIM card.
- Add to Blacklist: Add the number to the blacklist and block this number for calls.

- **Add to Whitelist:** Add the selected number to the whitelist.
- **Delete:** Delete the current log record.

Settings

Using this function, you can configure the phone's features according to your preferences.

Display

- **Wallpaper:** Set an image as the wallpaper.
- **Screen light settings:** Set the screen brightness and the time it stays on.
- **Keypad light settings:** Set the keypad backlight duration.
- **Home screen:** Customize the information displayed on the phone's home screen (connected SIM cards, time and date, playing audio file or radio station).

Phone

- **Time and Date:** You can set the time, date, and its format.
- **Scheduled power on/off:** The phone can turn on/off according to the set time.
- **Language:** Set the current system language.
- **Preferred input method:** Select input methods for different languages.
- **Shortcut keys:** You can customize the navigation keys for quick access to phone functions.
- **Power saving:** Enable/disable the power saving mode.

Call Settings

- **SIM Card Settings:** Manage the reception and making of calls.
- **Blacklist:** Blacklist settings and management. Block incoming calls from numbers in the list.
- **Whitelist:** Whitelist settings and management. Allow incoming calls only from numbers in the list.

- **Auto redial:** When this function is activated, the call will be automatically retried if the called party is busy or does not answer.
- **Call duration reminder:** A beep sounds when the call duration reaches 1 minute.
- **Auto call recording:** Enable automatic recording of phone calls. **Note:** This function works only when a memory card is connected.
- **Reject with SMS:** When rejecting an incoming call, you are prompted to send a text message to the rejected number.
- **Answer mode:** Enable this function, and when a new call comes in, press any key to answer the call.

SIM Card Settings

In this menu, you can select which SIM cards will be active, as well as enable/disable Airplane mode — in this mode, all wireless communication functions will be disabled.

Security Settings

- **SIM Protection > Change PIN** — change the SIM card PIN code.
- **Phone lock** — set a password when turning on the phone.
- **Change password** — change the password used when turning on the phone (default password is 1234).
- **Data protection > Settings** — set a password for specific phone sections (Messages; Calls; Contacts; My Files; Keypad).
- **Auto keypad lock** — set the time after which the phone will be automatically locked (Off / 15 sec / 30 sec / 1 min / 5 min).

Restore Settings

Reset all user settings and restore the default settings.
Note: The password for resetting user settings is 1234.

«M1» / «M2» Keys

Configure the additional «M1»/»M2» keys. You can set speed dial numbers manually or from the phonebook.

Emergency Calls

Configure the «SOS» button. Enable/disable and set up emergency call numbers, as well as the emergency SMS template. Up to five SOS numbers are available. If the first number is unreachable, the phone will call and send a message to the next numbers in the list.

Multimedia

Camera / Video Camera

The built-in camera allows you to take photos and record video clips.
Note: This function works only when a memory card is installed in the phone.

Gallery

This menu is used to work with JPG images located on the memory card.
Open **Menu > Gallery > Options** and select one of the functions:

- **View** — view the selected image.
- **Display** — select the image display method (List / Grid).
- **Send** — send the selected file via Bluetooth.
- **Use as** — set the selected file as the home screen wallpaper or as the power on/off animation.
- **Rename** — change the image file name.
- **Delete** — delete the selected image file.
- **Sort by** — sort files by Name / Type / Time / Size.
- **Mark multiple** — delete, copy, move, or send the selected files.
- **Save location** — select the memory partition for viewing files.
- **Details** — view information about the file.

Voice Recorder

The phone features a voice recorder for recording audio files.

Video Player

The phone has a built-in video player designed for viewing video clips located on the memory card.
The video player is controlled by the following keys:

- Central «OK» key — play/pause playback.
- Right key / press and hold right key — skip to next video clip / fast forward current video clip.
- Left key / press and hold left key — skip to previous video clip / rewind current video clip.

My Files

The file manager lists all files stored on the phone and the memory card.
Open Menu > My Files > Options and select one of the functions:

- Send — send the selected file via Bluetooth.
- View — view the selected image (images only).
- Play — play the selected media file (video and audio only).
- Use as — set the selected image as the wallpaper.
- New folder — create a new folder on the memory card.
- Rename — rename or copy a folder or file.
- Delete — delete the selected file or folder.
- Sort by — sort files by Name / Type / Time / Size.
- Mark multiple — delete, copy, move, or send the selected files.
- Copy — copy the selected item.
- Move — move the selected item.
- Details — information about the file size and creation date.

Profiles

Includes **General**, **Silent**, and **Meeting** modes.
Press the «OK» key to activate the profile mode.

Audio Player

The phone has a built-in music player designed for playing audio files located on the memory card.
The music player is controlled by the following keys:

- **«OK» key** — play/pause playback.
- **Right key / press and hold right key** — skip to next track / fast forward current track.
- **Left key / press and hold left key** — skip to previous track / rewind current track.
- **Up key** — switch the playback mode: No repeat / Repeat one / Repeat all.
- **Down key** — switch the playback order: Sequential / Shuffle.
- Volume keys or «*» and «#» keys — adjust the volume.

Games

The phone also includes the following games:

- F1 Racing.
- Snake.
- Astronaut.

FM Radio

The phone supports the FM radio function, which includes automatic and manual radio station search, and recording of favorite radio broadcasts to both the phone memory and the SD card.
CAUTION: When listening to the radio, adjust the volume. A constant high volume level may damage your hearing.
While listening to the radio, you can make or answer calls. If background playback is enabled, the FM radio automatically turns off during a call and resumes after it ends. The radio can be listened to even without a SIM card.

- Scanning: in the FM radio interface, press the Up/Down keys to manually change the frequency. Press the Left/Right keys for automatic channel scanning.
- Volume: press the volume keys to adjust the volume, or use «*» and «#».
- In the FM radio interface, press the left key to access the following options:
  - Channel list: Display the list of channels.
  - Manual input: Manually enter the radio channel frequency.
  - Auto search: Automatically scan and display available radio stations.
  - Settings: Basic settings for FM, such as background playback.

Calendar

The screen displays the current date and shows a monthly calendar.

Organizer

Calculator

Press the «OK» key to view the calculation results. Press the Up, Down, Left, Right, and «OK» keys to select +, -, *, /, = respectively. Press «Clear» to delete the value.

Alarm

The phone can sound alarm signals at a specified time.

Stopwatch

The phone features a stopwatch that allows you to measure time intervals.

Flashlight

Turn the phone’s flashlight on/off.

Bluetooth

Bluetooth allows you to exchange files with other phones.

Additional Features

No Service

If you are in an area not covered by the network, or if there is a physical obstacle, such as being indoors, the message «No service» will appear on the screen, and you will not be able to make or receive calls. To improve the connection, try moving closer to a window.

Emergency Calls

When you are outside your home network but within the coverage of another network, you can only make emergency calls.
To make an emergency call, make sure the phone is turned on and within the coverage area of any operator's network, and the calling function is active. Just as you dial a regular phone number, dial the emergency number 112 and press the Call key. Explain to the emergency service operator where you are and what happened.

«SOS» Key

To make an SOS call, press and hold the SOS key until you hear a beep. The phone will automatically send an emergency message and start calling the specified SOS numbers.

Rules and Conditions for Installation, Storage, Transportation, Sale (Distribution), and Disposal

- This device requires no assembly or mounting.
- The device must be stored in its original packaging, on heated premises, both at the manufacturer's and at the consumer's sites. The ambient temperature should be between +5 °C and +40 °C, and the relative humidity should not exceed 80% (non-condensing). The storage area must be free from aggressive contaminants (e.g., acid or alkali vapors) that could cause corrosion.
- The device must be transported in a dry place.
- The device requires careful handling. Protect it from exposure to dust, dirt, impact, moisture, fire, and other hazards.
- Sale or distribution of the device must be carried out in accordance with local legislation.
- Upon expiration of the device's service life, it must not be disposed of with unsorted household waste. Instead, it must be taken to an authorized collection point for electrical and electronic equipment for subsequent recycling and disposal in accordance with federal or local legislation. By ensuring proper disposal of this product, you help conserve natural resources and prevent potential harm to the environment and human health that may result from improper handling. For more detailed information about collection and disposal points for this product, please contact your local municipal authorities or your household waste disposal service.
- If a device malfunction is detected, immediately contact an authorized service center or dispose of the device.

Warranty Information

The manufacturer guarantees the device will function properly throughout the warranty period and be free from defects in materials and assembly. The warranty period commences on the date of purchase and applies to new products only. Warranty service includes free repair or replacement of defective parts that fail during the warranty period, provided the failure is not caused by consumer misuse and the product is operated in accordance with the user manual. Repairs or part replacements shall be performed at authorized service centers.

Warranty Period: 12 months.
Service Life: 24 months.

For the up-to-date list of authorized service centers, please visit:
https://www.dns-shop.ru/service-center/

Additional Information

Manufacturer: Hubei Maigao Intelligent Technology Co., Ltd.
2nd and 4th Floors, Building 7, No. 3 Dali Avenue, High-tech Zone, Xiangyang City (in Zhenhua Yuke Industrial Park), China.

Made in China.

The product meets the requirements of the technical regulations of the TR CU (EAEU).

Product specifications, information and appearance are subject to change without prior notice, for quality improvement of our products.

Production date (mm.yyyy): _____v.1

