1 Hardware Connection

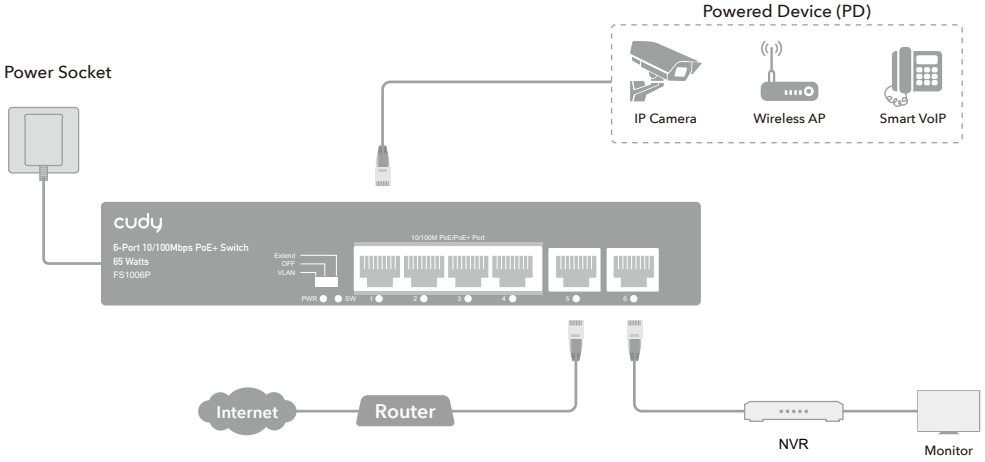

2 Physical Appearance

Front board

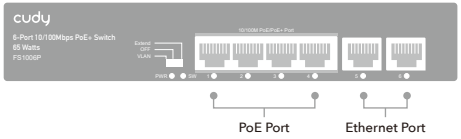

Back board



3 Specifications

Model	FS1006P
Network Protocol	IEEE802.3 / IEEE802.3u
	IEEE802.3x / IEEE802.3af/at
PoE Standard	IEEE802.3at (30W) and IEEE802.3af (15.4w)
POE port output	DC 52V
Power Pin	Power over spare pairs 1/2(+) , 3/6 (-)
AC Input Voltage	AC100~240V
Output	52V ~ 1.25A
Total Power	65W
Dimension(L×W×H)	200mm*120mm*45mm

Bandwidth	1.2Gbps (non-blocking)
MAC Address	1K MAC address table
Packet Buffer Memory	448K
Forwarding Mode	Store-And-Forward
Working Temperature	-20~50°C
Storage Temperature	-40~80°C
Working humidity	Max relative humidity 90%, non-condensing
Storage humidity	Max relative humidity 95%, non-condensing
Working hight	Max 10,000 feet（3,000 meters）
Storage hight	Max 10,000 feet（3,000 meters）

4 DIP Explanation

VLAN	**Port Isolation**	Downlink designated ports are isolated from each other, only transmit data with the uplink port.
Default	**Standard Switch**	All ports communicate freely
Extend	**Link Extension**	The specified port speed drops to 10Mbps/s, max PoE transmission is 250 meters.

5 LED and Interface Explanation

PWR	**Power LED**	**ON**	Powered
		OFF	No power
SW Mode	**DIP LED**	**ON**	Port Isolation
		OFF	Standard switching
		Flashing	Link extension
Link ACT	**Link LED**	**ON**	Link connected
		OFF	Link disconnected
		Flashing	Link data transmitted

EU declaration of conformity

Cudy hereby declares that the device is in compliance with the essential requirements and other relevant provisions of directives 2014/30/EU, 2014/35/EU, 2009/125/EC and 2011/65/EU.The original EU declaration of conformity may be found at http://www.cudy.com/

Email: support@cudy.com

RoHS
Made in China
810600081

Quick Installation Guide

Model: FS1006P

Email:
support@cudy.com

Website:
www.cudy.com