Quick Installation Guide

GE Uplink Switch with 8-Port PoE
S110GPC

Package contents

- Switch × 1
- Power cord × 1
- Quick installation guide

Install the device

■ Preparations

– Desktop mounting: ESD bracelet or gloves
– Wall mounting: ESD bracelet or gloves, ladder, screwdriver, marker, hammer drill, rubber hammer, spirit level, 2 screws (thread diameter: 3 mm, length: 14 mm, head diameter: 5.2 mm), 2 plastic anchors (height: 6.6 mm, inner diameter: 2.4 mm, length: 26.4 mm)

■ Installation

Desktop mounting

Horizontally place the switch right-side up on a big enough, clean, stable and flat desktop.

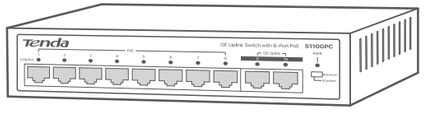

Wall mounting

Note

- The switch can only be installed on non-flammable walls, such as a concrete wall.
- Do **NOT** install the switch with air vents facing downward. Otherwise, there will be potential safety hazards.

1. Mark your wall for the wall-mounting slots on the bottom of the switch (distance between two holes: 94 mm) and drill two holes (diameter: 6 mm) horizontally.
2. Hammer plastic anchors into the holes.
3. Insert screws into the plastic anchors, leaving a gap (at least 2.5 mm) between the screw heads and plastic anchors.
4. Place the switch on the screws and slide it down until it locks into place.

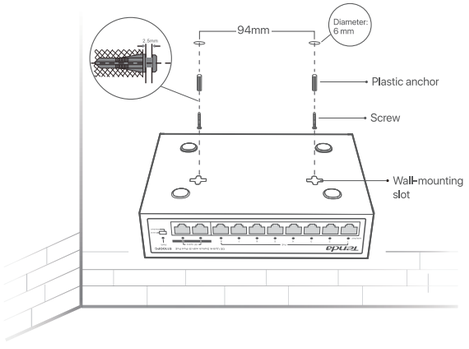

Typical network topology

Tips

The switch supports auto MDI/MDIX. You can use either a straight-through cable or a crossover cable to connect the switch to Ethernet devices.

■ Standard mode (default)

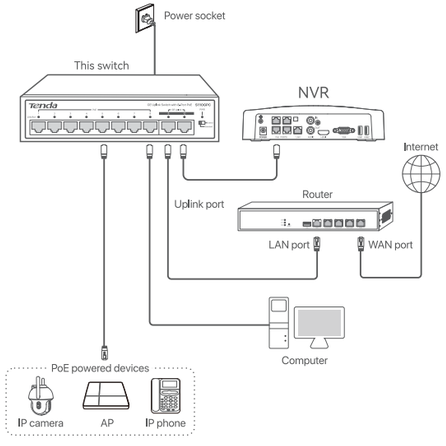

■ Extend mode

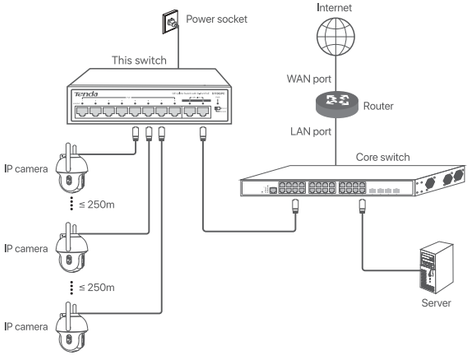

After connection, you can check whether the switch is connected properly or change its working mode based on the table below.

Indicator/Toggle	Description
PWR	**Solid on**: The switch is powered on. **Off**: The switch is powered off.
Link/Act	**Solid on**: The port is connected. **Blinking**: Data is being transmitted over the port. **Off**: The port is disconnected.
Working mode toggle	**Off:** Standard mode (default). In this mode, all ports can communicate with each other. **On:** Extend mode. In this mode, the maximum transmission distance can reach 250 meters, and all ports can communicate with each other.

FAQ

Q1. The PWR indicator does not light up. What should I do?

- Ensure that the power cord is connected to the switch and the power socket properly.
- Ensure that the power socket is supplying power normally.
- Ensure that the input voltage matches the value required by the switch.

Q2. The Link/Act indicator is off. What should I do?

- Ensure that the Ethernet cable is not damaged.
- Ensure that the Ethernet cable between the switch and the attached device is connected properly, and the Ethernet cable is within the standard length of 100m.
- Ensure that the switch is powered on.
- Ensure the connected device is powered on and working properly.

Q3. The PoE ports do not supply power to devices. What should I do?

- Ensure that the powered devices comply with the IEEE 802.3af/at standards.
- Ensure that the power consumption/total power consumption does not exceed the maximum output power of each port/switch.
- Ensure that the powered devices are connected to the switch properly with CAT5e Ethernet cables or above.

Q4. What are the PoE power supply parameters of the switch?

Model	S110GPC
PoE standard	IEEE 802.3af, IEEE 802.3at
PoE pinout	4-pair mode (pins 1, 2, 4, 5 is DC +, pins 3, 6, 7, 8 is DC -)
PoE port	1 - 8
Maximum output of a single port	30W
Maximum output of switch	65W

Get support and services

For technical specifications, user guides and more information, please visit the product page or service page on **www.tendacn.com**. Multiple languages are available. You can see the product name and model on the product label.

https://www.tendacn.com/service/default.html

CE mark warning

This is a Class A product.
Warning: Operation of this equipment in a residential environment could cause radio interference. In which case the user may be required to take adequate measures.
NOTE: (1) The manufacturer is not responsible for any radio or TV interference caused by unauthorized modifications to this equipment. (2) To avoid unnecessary radiation interference, it is recommended to use a shielded RJ45 cable.

Declaration of Conformity

Hereby, TENDA TECHNOLOGY CO., LTD. declares that the device (Switch) is in compliance with directives 2014/35/EU and 2014/30/EU.
The full text of the EU Declaration of Conformity is available at the following internet address:
https://www.tendacn.com/download/list-9.html

Safety precautions

Before operating, read the operation instructions and precautions to be taken, and follow them to prevent accidents. The warning and danger items in other documents do not cover all the safety precautions that must be followed. They are only supplementary information, and the installation and maintenance personnel need to understand the basic safety precautions to be taken.

– For wall mounting, the device is only suitable for mounting at heights ≤ 2m.
– Operating environment: Temperature: 0°C - 45°C (32°F - 113°F); Humidity: (10% - 90%) RH, non-condensing; Storage environment: Temperature: -40°C - 70°C (-40°F - 158°F); Humidity: (5% - 90%) RH, non-condensing.
– The mains plug is used as the disconnect device and shall remain readily operable.
– The power socket shall be installed near the device and easily accessible.
– Only use attachments/accessories specified by the manufacturer.
– Do not block any ventilation openings.
– Keep the device away from water, heat sources, high electric field, high magnetic field, and inflammable and explosive items.
– Keep the operating environment clean. Remove dust from the device regularly. Cut power before cleaning.
– During installation, do not wear conductive items (such as a watch, or hand chain).
– Ensure proper grounding before device operation. Refer to the **Lightning Protection Guide** on the official website for guidance.
– Disassembling or modifying the device or its accessories without authorization voids the warranty, and might cause safety hazards.
– If such phenomena as smoke, abnormal sound or smell appear when you use the device, immediately stop using it and disconnect its power supply, unplug all connected cables, and contact the after-sales service personnel.
– Disconnect the power source during servicing.
– Refer all servicing to qualified service personnel.
– The device's marking information can be found on its surface.

For the latest safety precautions, see **Safety and Regulatory Information** on **www.tendacn.com**.

FCC Statement

This equipment has been tested and found to comply with the limits for a Class A digital device, pursuant to Part 15 of the FCC Rules. These limits are designed to provide reasonable protection against harmful interference when the equipment is operated in a commercial environment. This equipment generates, uses, and can radiate radio frequency energy and, if not installed and used in accordance with the instruction manual, may cause harmful interference to radio communications. Operation of this equipment in a residential area is likely to cause harmful interference in which case the user will be required to correct the interference at his own expense.
Operation is subject to the following two conditions: (1) this device may not cause harmful interference, and (2) this device must accept any interference received, including interference that may cause undesired operation.
Caution!
Any changes or modifications not expressly approved by the party responsible for compliance could void the user's authority to operate the equipment.
NOTE: (1) The manufacturer is not responsible for any radio or TV interference caused by unauthorized modifications to this equipment. (2) To avoid unnecessary radiation interference, it is recommended to use a shielded RJ45 cable.

RECYCLING

This product bears the selective sorting symbol for Waste Electrical and Electronic Equipment (WEEE). This means that this product must be handled pursuant to European directive 2012/19/EU in order to be recycled or dismantled to minimize its impact on the environment.
User has the choice to give his product to a competent recycling organization or to the retailer when he buys a new electrical or electronic equipment.

Specifications are subject to change without notice.
V1.0 Keep for future reference.