Quick Installation Guide

5/8-Port 2.5G Ethernet Switch
TEM2005D/TEM2008D

Package contents

- Switch × 1
- Power adapter × 1
- Rubber feet pad × 4
- Screw (thread diameter: 3 mm, length: 14 mm, head diameter: 5.2 mm) × 2
- Plastic anchor (height: 6.6 mm, inner diameter: 2.4 mm, length: 26.4mm) × 2
- Quick installation guide

TEM2005D is used for illustrations here unless otherwise specified. The actual product prevails.

Install the device

Preparations

– Desktop mounting: ESD bracelet or gloves
– Wall mounting: ESD bracelet or gloves, ladder, screwdriver, marker, hammer drill, rubber hammer, spirit level

Installation

Desktop mounting

Paste the four rubber feet pads to the four recesses on the bottom of the switch. Horizontally place the switch right-side up on a big enough, clean, stable and flat desktop.

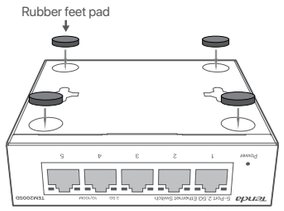

Example: TEM2005D

Wall mounting

Note:
- This switch can only be installed on non-flammable walls, such as a concrete wall.
- Do **NOT** install the switch with its air vents facing downward. Otherwise, there will be potential safety hazards.

1. Mark your wall for the wall-mounting slots on the bottom of the switch (distance between two holes: 70 mm for TEM2005D, 130 mm for TEM2008D) and drill two holes (diameter: 6 mm) horizontally.
2. Hammer plastic anchors into the holes.
3. Insert screws into the plastic anchors, leaving a gap (at least 2.5 mm) between the screw heads and plastic anchors.
4. Place the switch on the screws and slide it down until it locks into place.

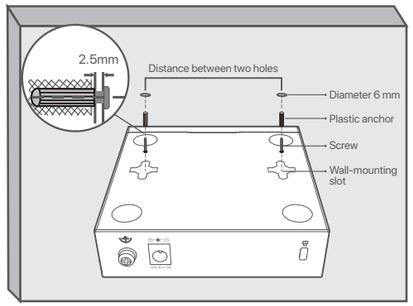

Example: TEM2005D

Typical network topology

Tips:
The switch supports auto MDI/MDIX. You can use either a straight through cable or a crossover cable to connect the switch to Ethernet devices.

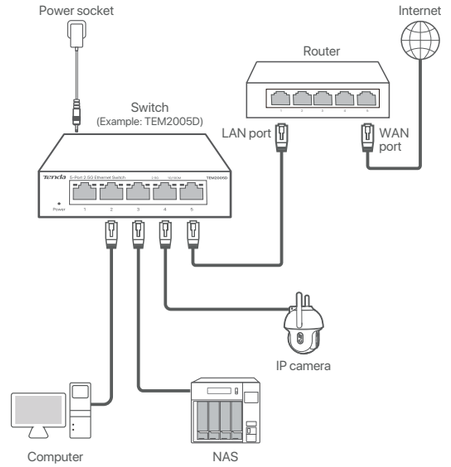

Indicators and ports

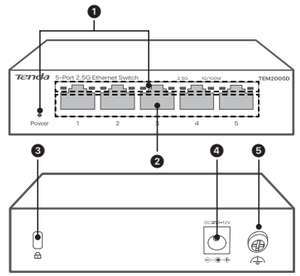

Example: TEM2005D

❶ Indicator
❷ RJ45 port
❸ Anti-theft slot
❹ Power jack
❺ Ground terminal

Indicator/Slot	Description
Power	**Solid on**: The switch is powered on.
	Off: The switch is powered off.
1G/100M 2.5G	**Solid on**: The port is connected.
	Blinking: Data is being transmitted over the port.
	Off: The port is disconnected.
	Tips : 1G/100M: Yellow light indicates a negotiation rate of 1Gbps or 100Mbps. 2.5G: Green light indicates a negotiation rate of 2.5Gbps.
	Used with a lock (not provided) to secure the switch to a fixed object.

FAQ

Q1. The power indicator (Power) does not light up. What should I do?
– Ensure that the power adapter is connected to the switch and the power socket properly.
– Ensure that the power socket is supplying power normally.
– Ensure that the input voltage matches the value required by the switch.

Q2: The Link/Act indicator of the switch is off. What should I do?
– Ensure that the switch is powered on.
– Ensure the connected device is powered on and working properly.
– Ensure that the Ethernet cable between the switch and the attached device is connected properly.
– Ensure that the Ethernet cable is not damaged, and meets the specification requirements.

Get support and services

For technical specifications, user guides, Symbols on Products and Materials and more information, please visit the product page or service page on **www.tendacn.com**. Multiple languages are available. You can see the product name and model on the product label.

https://www.tendacn.com/service/default.html

Safety precautions

Before operating, read the operation instructions and precautions to be taken, and follow them to prevent accidents. The warning and danger items in other documents do not cover all the safety precautions that must be followed. They are only supplementary information, and the installation and maintenance personnel need to understand the basic safety precautions to be taken.
– For wall mounting, the device is only suitable for mounting at heights ≤ 2 m.
– Operating environment: Temperature: 0°C - 40°C (32°F - 104°F); Humidity: (10% - 90%) RH, non-condensing; Storage environment: Temperature: -40°C - 70°C (-40°F - 158°F); Humidity: (5% - 90%) RH, non-condensing.
– The mains plug is used as the disconnect device and shall remain readily operable.
– The power socket shall be installed near the device and easily accessible.
– Only use attachments/accessories specified by the manufacturer.
– Do not block any ventilation openings.
– Keep the device away from water, heat sources, high electric field, high magnetic field, and inflammable and explosive items.
– Keep the operating environment clean. Remove dust from the device regularly. Cut power before cleaning.
– Ensure proper grounding before device operation. Refer to the **Lightning Protection Guide** on the official website for guidance.
– During installation, do not wear conductive items (such as a watch, or hand chain).
– Disassembling or modifying the device or its accessories without authorization voids the warranty, and might cause safety hazards.
– If such phenomena as smoke, abnormal sound or smell appear when you use the device, immediately stop using it and disconnect its power supply, unplug all connected cables, and contact the after-sales service personnel.
– Disconnect the power source during servicing.
– Refer all servicing to qualified service personnel.
– The device's marking information can be found on its surface.

For the latest safety precautions, see **Safety and Regulatory Information** on **www.tendacn.com**

CE mark warning

This is a Class A product.
Warning: Operation of this equipment in a residential environment could cause radio interference. In which case the user may be required to take adequate measures.
NOTE: (1) The manufacturer is not responsible for any radio or TV interference caused by unauthorized modifications to this equipment. (2) To avoid unnecessary radiation interference, it is recommended to use a shielded RJ45 cable.
Declaration of Conformity
Hereby, SHENZHEN TENDA TECHNOLOGY CO., LTD. declares that the device (Switch) is in compliance with directives 2014/35/EU and 2014/30/EU.
The full text of the EU Declaration of Conformity is available at the following internet address: https://www.tendacn.com/download/list-9.html

FCC statement

This equipment has been tested and found to comply with the limits for a Class A digital device, pursuant to Part 15 of the FCC Rules. These limits are designed to provide reasonable protection against harmful interference when the equipment is operated in a commercial environment. This equipment generates, uses, and can radiate radio frequency energy and, if not installed and used in accordance with the instruction manual, may cause harmful interference to radio communications. Operation of this equipment in a residential area is likely to cause harmful interference in which case the user will be required to correct the interference at his own expense.
Operation is subject to the following two conditions: (1) this device may not cause harmful interference, and (2) this device must accept any interference received, including interference that may cause undesired operation.
Caution!
Any changes or modifications not expressly approved by the party responsible for compliance could void the user's authority to operate the equipment.
NOTE: (1) The manufacturer is not responsible for any radio or TV interference caused by unauthorized modifications to this equipment. (2) To avoid unnecessary radiation interference, it is recommended to use a shielded RJ45 cable.

RECYCLING

This product bears the selective sorting symbol for Waste Electrical and Electronic Equipment (WEEE). This means that this product must be handled pursuant to European directive 2012/19/EU in order to be recycled or dismantled to minimize its impact on the environment.

User has the choice to give his product to a competent recycling organization or to the retailer when he buys a new electrical or electronic equipment.

Technical support

Shenzhen Tenda Technology Co., Ltd.
Floor 6-8, Tower E3, No.1001, Zhongshanyuan Road, Nanshan District, Shenzhen, China. 518052
Website: www.tendacn.com
E-mail: support@tenda.cn
support.usa@tenda.cn (North America)
support.uk@tenda.cn (United Kingdom)

Copyright© 2026 Shenzhen Tenda Technology Co., Ltd. All rights reserved.
Tenda is a registered trademark legally held by Shenzhen Tenda Technology Co., Ltd. Other brand and product names mentioned herein are trademarks or registered trademarks of their respective holders. Specifications are subject to change without notice.

V1.0 Keep for future reference.