1

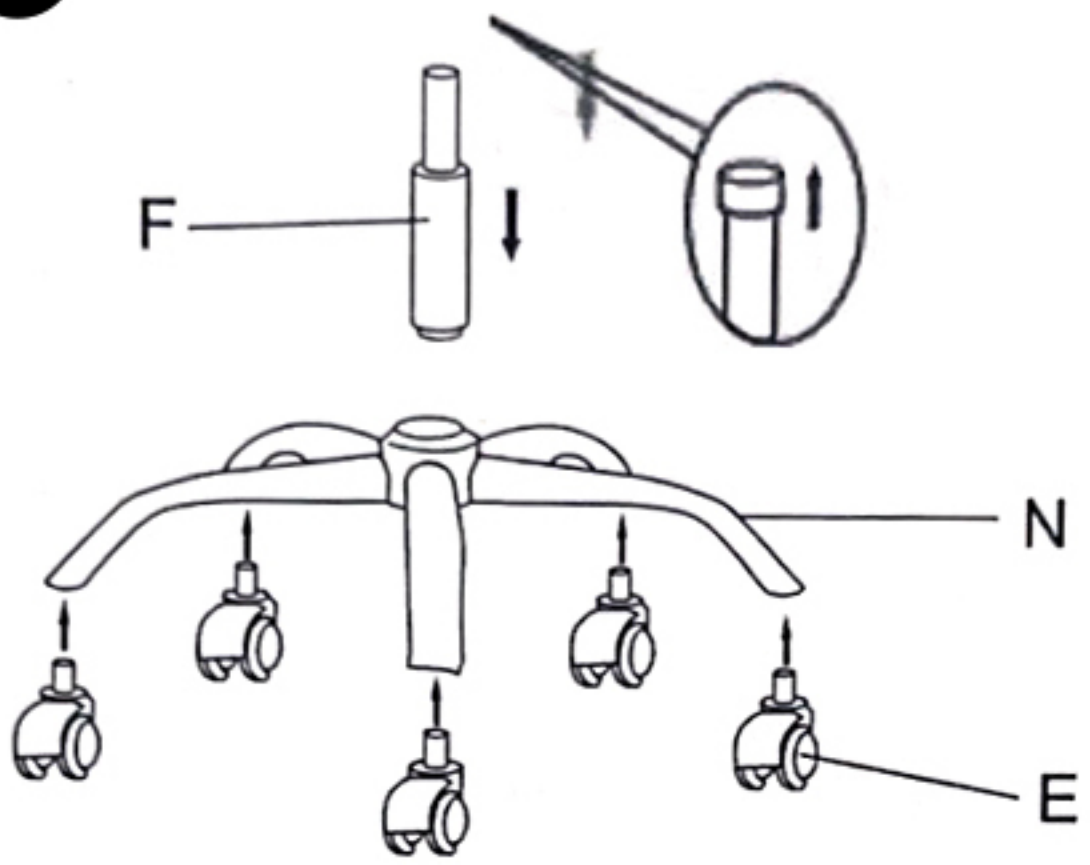

2

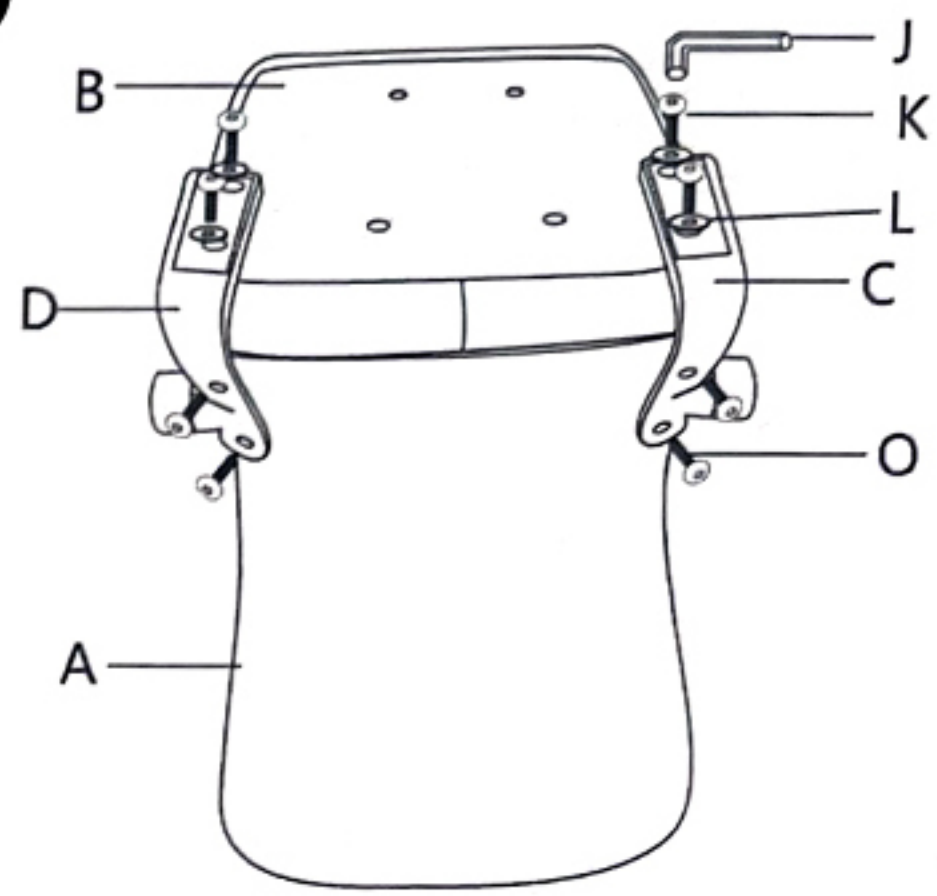

3

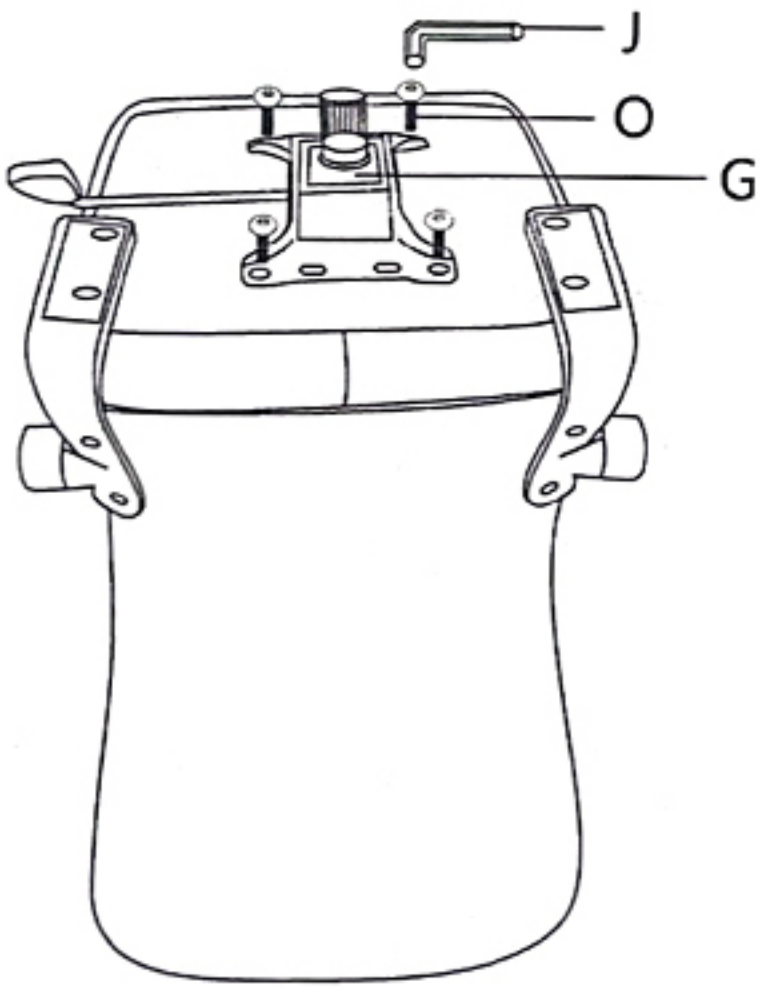

4

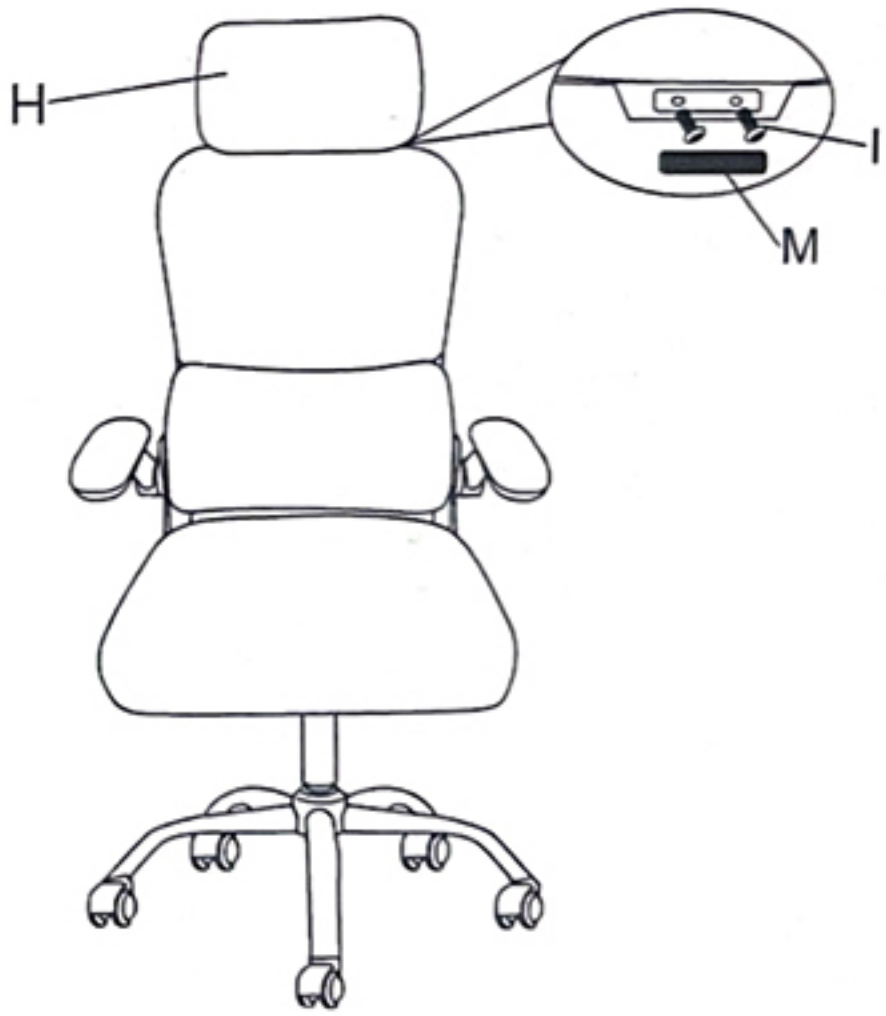

A 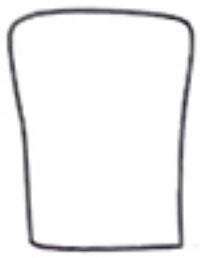 X1	B  X1	C  X1	D  X1	E  X5
F  X1	G  X1	H  X1	I  6*25 X2	J  X1
K  6*35 X4	L  X4	M  X1	N  X1	O  6*20 X8