Make It Yours.

TD300 MESH

EN	Package Content	HU	A csomag tartalma
AR	حزمة المحتوى	ID	Isi Paket
BG	Съдържание на пакета	IT	Contenuto della scatola
CHS	零件包	JP	パッケージ内容物
CHT	零件包	KR	구성품
CS	Obsah balení	NL	Verpakkingsinhoud
DE	Verpackungsinhalt	PL	Zawartość opakowania
EL	Περιεχόμενα Συσκευασίας	PT	Conteúdo da embalagem
ES	Contenido Paquete	RU	Комплектация
FR	Contenu de l'emballage	SR	Sadržaj pakovanja
FA	محتویات	TR	Paket içeriği





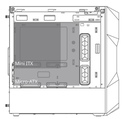





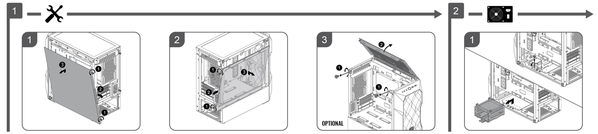

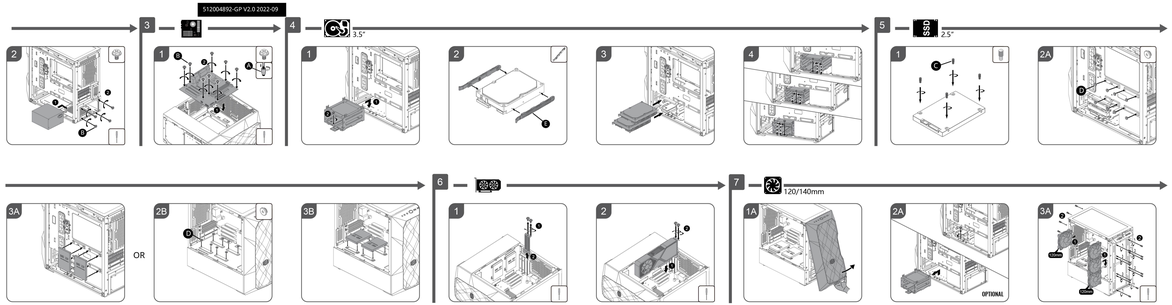

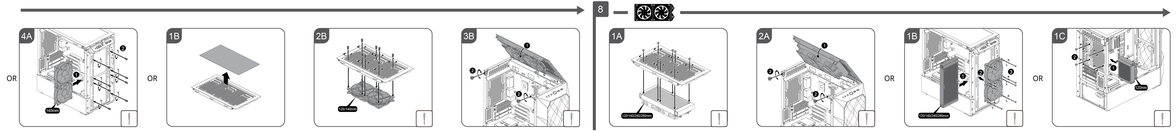

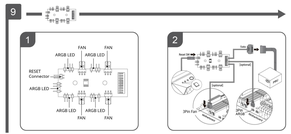

Warranty information

English [EN]

Cooler Master guarantees that this device is free of defect in material and workmanship, and provides a two-year limited hardware warranty for the device commencing from the date of purchase. Please keep your receipt for proof of purchase. This product is designed for computer usage only. Using this device in any other capacity voids the warranty. If you are not familiar with computer hardware installation, please ask for professional assistance.
The warranty offered covers normal use. Defect or damage that result from improper operation, storage, misuse or abuse, accident or neglect, which are not the fault of Cooler Master, are exclude from warranty coverage.

Note: the warranty is voided by removal or alternation of product or parts identification labels.
*All OEM/bulk packaging product come with one year limited warranty.
*In case of conflict between the warranty provided by the country of point of sale and this manual, the warranty of the actual country of point of sale shall be the prevailing document.
*In case of malfunction of electronic components or need of accessories purchase during the warranty period, please return to the original store of purchase.

Türkçe [TR]

Cooler Master bu cihazda malzeme ve işçilik hatası bulunmadığını garanti eder ve cihaz için satın alma tarihinden başlayan iki yıla sınırlı bir donanım garantisi verir. Alımı belgelemek için lütfen makbuzunuzu saklayın.
Bu ürün yalnızca bilgisayar kullanımı için tasarlanmıştır. Bu cihazın başka bir kapsamda kullanılması garantiyi geçersiz kılar. Bilgisayar donanımı kurulumu konusunda bilmiyorsanız, lütfen profesyonel yardım talep edin.
Verilen garanti normal kullanım içindir. Cooler Master'ın hatası olmayan uygunsuz kullanım, depolama, yanlış kullanım veya kötü kullanım, kaza ya da ihmalden kaynaklanan arıza ya da hasarlar garanti kapsamının dışındadır.

Dikkat: Ürün ya da parça tanılma etiketlerinin sökülmesi ya da değiştirilmesi garantiyi geçersiz kılar.
*1. Tüm OEM/ambalajlı ürünler bir yıl sınırlı garanti ile gelir
*2. Garanti verilen ülkedeki satış noktası ve bu kullanma kılavuzu arasında bir çelişki olursa, satış noktasının bulunduğu ülkedeki garanti hükümleri önceliğe tayr.
*3. Elektronik bileşenlerin arızalanması ya da garanti süresinde aksesuarların satın alınması gerekirse, lütfen ürünü satın aldığınız mağazaya başvurunuz.

简体中文 [ZHS]

Cooler Master保证本设备之材质及制造无明显缺陷，并提供本设备二年之硬件有限保固服务，自购买日算起。请将您的收据当作购买证明。本产品设计仅供计算机使用。若以其他用途使用本设备，保固将失效。如果您不熟悉硬件安装程序，请寻求专业人士协助。
保固涵盖正常使用。因不当操作、储存、误用或滥用、意外事故或疏忽而导致的缺陷或损坏，以及非Cooler Master过失的缺陷或损坏，均不在保固范围内。
注意：撤除或变更产品或零件上的辨识贴纸将导致保固失效。
*所有OEM及工厂包装的产品皆提供一年有限保固。
*如果销售国家所提供的保固条款与本使用说明书有冲突时，则以实际销售国家之保固条款为准。
*倘若零件或设备在保固期间发生故障或需购买配件，请将产品送回原购买处。

繁體中文 [ZHT]

Cooler Master保證本設備之材質及製造無明顯缺陷，並提供本設備二年之硬體有限保固服務，自購買日算起。請將您的收據當作購買證明。本產品設計僅供電腦使用。若以其他用途使用本設備，保固將失效。如果您不熟悉硬體安裝程序，請尋求專業人士協助。
保固涵蓋正常使用。因不當操作、儲存、誤用或濫用、意外事故或疏忽而導致的缺陷或損壞，以及非Cooler Master過失的缺陷或損壞，均不在保固範圍內。
注意：撤除或變更產品或零件上的辨識貼紙將導致保固失效。
*所有OEM及工廠包裝的產品皆提供一年有限保固。
*如果銷售國家所提供的保固條款與本使用說明書有衝突時，應以實際銷售國家之保固為準。
*倘若零件或設備在保固期間發生故障或需購買配件，請送回購買商店。

有毒有害物质或元素

部件名称	有毒有害物质或元素					
	铅 (Pb)	汞 (Hg)	镉 (Cd)	六价铬 (Cr(VI))	多溴联苯 (PBB)	多溴二苯醚 (PBDE)
机械组	×	○	○	○	○	○
装载架	×	○	○	○	○	○
I/O接组	×	○	○	○	○	○
风扇	×	○	○	○	○	○
零件包	×	○	○	○	○	○
电源	×	○	○	○	○	○

○：表示该有毒有害物质在该部件所有均质材料中的含量均在SJ/T 26572规定的限量要求以下。
×：表示该有毒有害物质至少在该部件的某一均质材料中的含量超出SJ/T 26572规定的限量要求。

■ China - Cooler Master China
Room 113, Building 9, No. 307, Songjin Road, Jinshanwei Town, Jinshan Dist., Shanghai City,China
Tel: +86-21-5743 5777

■ Europe - Cooler Master Europe B.V.
Computerlaan 16, 3629LA Vianen, The Netherlands
Tel: +31 (0)347 750 999

■ North America - Cooler Master NA
1 F Vollum Hill Blvd Suite 2500 Cranberry, CA 91711 USA
Tel: +1-888-624-7498

■ South America
E-mail: Soporte_Latam@coolermaster.com.tw

Cooler Master Products' Limited Warranty
This document describes the warranty varies for all Cooler Master product sold in Australia.

For Australia only:
Our goods come with guarantees that cannot be excluded under the Australian Consumer Law. You are entitled to a replacement or refund for a major failure and for compensation for any other reasonably foreseeable loss or damage. You are also entitled to have the goods repaired or replaced if the goods fail to be of acceptable quality and the failure does not amount to a major failure.
Telephone: +888-2-2225-2917 (standard international call charges apply.)

Who the Warranty Protects: This Warranty is valid to the original purchaser only.

What the warranty protects:
This warranty is valid only for the Cooler Master Products distributed by authorized dealer(s) in Australia. Please contact Cooler Master for
* Cooler Master Support: support.coolermaster.com

What Is and Is Not Covered:
The Limited Hardware Warranty for our warranty is not an unconditional guarantee for the duration of the Program. Any replaced parts become the property of Cooler Master. The Program does not apply to the software component of a product or a product which has been damaged due to accident, misuse, abuse, improper installation, usage not in accordance with product specifications and instructions, natural or perodinal disaster, or unauthorized repair or modification of any kind.

The Program does not cover any warranty such as below:
• Any damages unrelated to manufacturing defects.
• Any product which has been modified without official permission from Cooler Master Opinion;
• Any product which has been modified without official permission from Cooler Master, or on which the serial number or warranty sticker has been removed, altered or rendered illegible;
damage, deterioration or malfunction resulting from:
• Accidents, misuse, abuse, neglect, fire, water, lightning, or other acts of nature, commercial or industrial use, unauthorized product modification or failure to follow instructions included with the product;
• Third party products using Cooler Master Components will not be covered by warranty. See your vendor or the manufacturer for information about repairs.
• Repair or attempted repair by anyone not authorized by Cooler Master, Inc.
• Any shipment of the product (claims must be submitted to the shipper);
• Unauthorized repair;
• Cooler Master does not warrant that this product will meet your requirements. It is your responsibility to determine the suitability of this product for your purposes.
• Any product or component charges.
• You are responsible for the cost of shipping the product to Cooler Master. Cooler Master pays the cost of returning a product to you.
• Cooler Master is not responsible for replacing the product with a service product at their sole discretion at any time.
• Product malfunction or damage resulting from liquids or moisture.
• Consumable parts such as fuses, batteries, cables, USB cables, extension cables, adapter cables, adapters, power cords, screws, retention brackets, ear cups, and all other similar accessories.

Limitation of implied warranties:
THERE ARE NO WARRANTIES, EXPRESS OR IMPLIED, WHICH EXTEND BEYOND THE DESCRIPTION CONTAINED HEREIN INCLUDING THE IMPLIED WARRANTY OF MERCHANTABILITY AND FITNESS FOR A PARTICULAR PURPOSE.

Exclusion of damages:
COOLER MASTER'S LIABILITY IS LIMITED TO THE COST OF REPAIR OR REPLACEMENT OF THE PRODUCT. COOLER MASTER SHALL NOT BE LIABLE FOR:
• DAMAGE TO OTHER PROPERTY CAUSED BY ANY DEFECT IN THE PRODUCT, DAMAGES BASED UPON INCONVENIENCE, LOSS OF USE OF THE PRODUCT, LOSS OF TIME, LOSS OF PROFIT, LOSS OF BUSINESS OPPORTUNITY, LOSS OF GOODWILL, INTERFERENCE WITH BUSINESS RELATIONSHIPS OR OTHER COMMERCIAL LOSS, EVEN IF ADVISED OF THEIR POSSIBILITY OF SUCH DAMAGES.
• ANY OTHER DAMAGES, WHETHER INCIDENTAL, CONSEQUENTIAL OR OTHERWISE
• ANY CLAIM AGAINST THE CUSTOMER BY ANY OTHER PARTY

Warranty Information:
If the product does not work with reasonable defect within the period of (refer to Table A.) starting on the first day of purchase (with proof of invoice), this is what you must do, to claim the warranty from the above address.

Procedures:
The customer should return to the shop where he/she has bought the goods, After confirming with the shop with a valid invoice, they may approach the distributor for RMA claim.
Table A: Warranty period for defective goods was damaged due to natural causes, replacement and repair will be done by distributor (excluding brand new or refurbished goods)
Table B: Warranty period for defective goods was damaged by customer, the goods will be covered by the consumer, and distributor will cover the cost involved in the transporting of parts or repaired goods to the consumer.

Regarding all the expenses incurred in making the claim, and this is how you would claim:
1. Within the valid warranty date, starting from the first day of issuing invoice, Retail shops will assist in confirmation with distributor for the consumer for the followers.
2. After the valid warranty date, the consumer, then the consumer should cover all expenses in fixing the product, if the product still can't be fixed, we would suggest consumer in buying a brand new product.
3. Product defect caused under natural use, expenses will be covered by the distributor
4. For those products with expired warranty dates, we would suggest consumer to purchase a brand new products, without undergoing for repairs.

Table A:
Cooler Master Products
Please check your user manual for the exact warranty period terms for products that are not shown below.
For more warranty information, please visit our official website: http://www.coolermaster.com/service/warranty.html

Chassis

Product Name	Warranty Time
All Chassis Series (Only Electronic Parts)	2 year
CH* (Chassis + PSU)	1 year

[EN] Limited warranty period: http://www.coolermaster.com/service/warranty.html
[AR] فترة الضمان المحدودة: http://www.coolermaster.com/service/warranty.html
[BG] Период на ограничена гаранция: http://www.coolermaster.com/service/warranty.html
[CS] Období omezené záruky: http://www.coolermaster.com/service/warranty.html
[DA] Begrænset garanti: http://www.coolermaster.com/service/warranty.html
[DE] Beschränkter Garantiezeitraum: http://www.coolermaster.com/service/warranty.html
[EL] Περίοδος περιορισμένης εγγύησης: http://www.coolermaster.com/service/warranty.html
[ES] Periodo de garantía limitada: http://www.coolermaster.com/service/warranty.html
[FA] http://www.coolermaster.com/service/warranty.html ،مدت گارانتی محدود
[FI] Rajoitettu takuujakso: http://www.coolermaster.com/service/warranty.html
[FR] Période de garantie limitée: http://www.coolermaster.com/service/warranty.html
[HU] Korlátozott jótállási időszak: http://www.coolermaster.com/service/warranty.html
[HR] Razdoblje ograničenog jamstva: http://www.coolermaster.com/service/warranty.html
[ID] Masa garansi terbatas: http://www.coolermaster.com/service/warranty.html
[IT] Periodo di garanzia limitata: http://www.coolermaster.com/service/warranty.html
[JA] 限定保証期間: http://www.coolermaster.com/service/warranty.html
[KO] 제한 보증 기간 : http://www.coolermaster.com/service/warranty.html
[LV] Ierobežo vespēkai: http://www.coolermaster.com/service/warranty.html
[NL] Beperkte garantieperiode: http://www.coolermaster.com/service/warranty.html
[NO] Begrenset garantiperiode: http://www.coolermaster.com/service/warranty.html
[PL] Okres ograniczonej gwarancji: http://www.coolermaster.com/service/warranty.html
[PT] Período de garantia limitada: http://www.coolermaster.com/service/warranty.html
[RU] Ограничение на гарантийный срок: http://www.coolermaster.com/service/warranty.html
[SR] Period ograničene garancije: http://www.coolermaster.com/service/warranty.html
[SV] Begränsad garantiperiod: http://www.coolermaster.com/service/warranty.html
[TR] Sınırlı garanti süresi: http://www.coolermaster.com/service/warranty.html
[UK] Обмежений гарантійний термін: http://www.coolermaster.com/service/warranty.html
[ZHT] 有限保固期間 : http://www.coolermaster.com/service/warranty.html