单色说明书
折后尺寸：130x145mm
纸材质：80g书写纸
5折页，折法：风琴折



ALSEYE®

AIR COOLER

S120-H4 | S120-H5 | S120-H6

User Manual

ALSEYE CORPORATION LIMITED
B309, Block B, 3rd floor, Xindushi Plaza, NO.2008 Xinzhou South Road, Futian District, Shenzhen, Guangdong Province, China
86-0755-23600230 support@alseyecorp.com
www.alseyecorp.com



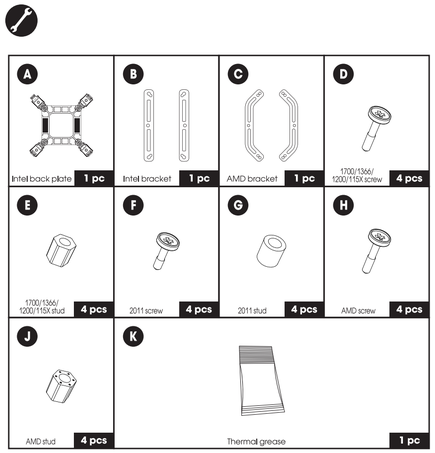

1-1 Intel

1. 将背板A调整到适合的卡槽，撕除背胶保护膜
2. 将背板A安装在主板背面

1. Adjust the back plate A to the appropriate card slot, and tear off the adhesive protective film.
2. Install back plate A on the back of the motherboard.

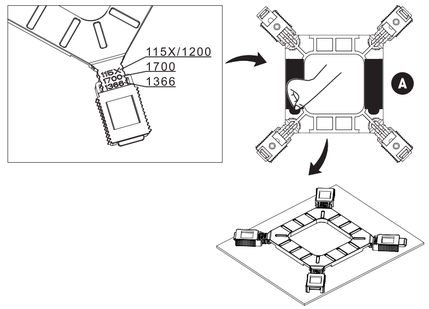

1-2 Intel LGA1700/1366/ 1200/ 115X

按上下顺序使用配件安装扣具
Install the bracket orderly.

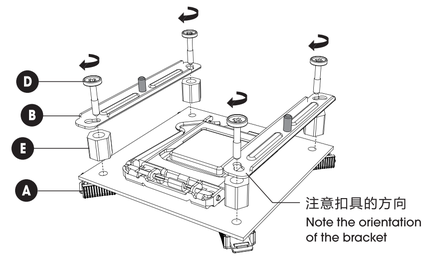

1-3 Intel LGA 2011

按上下顺序使用配件安装扣具
Install the bracket orderly

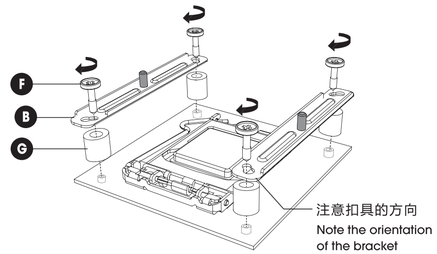

Front

2-1 AMD

1. 将拧出4颗螺丝，拆下主板原装的塑胶支架
2. 保留主板的原装背板

1. Unscrew 4 screws and remove the original plastic bracket of the motherboard.
2. Keep the original back plate of the motherboard.

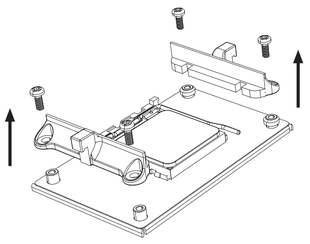

2-2 AMD AM5/AM4/AM3

按上下顺序使用配件安装扣具
Install the bracket orderly.

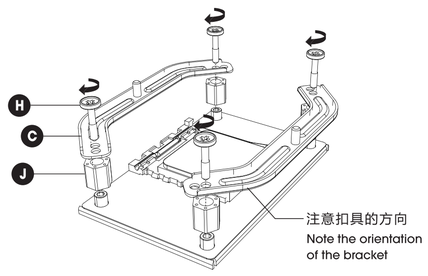

3 Intel AMD

均匀涂抹导热硅脂
Evenly apply thermal grease.

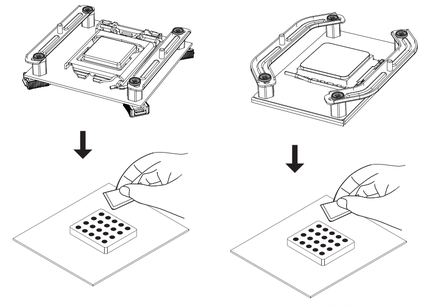

Intel AMD

4 Installation

撕除散热器底部的保护膜,将散热器固定
Tear off the protective film on the bottom of the radiator and fix it.

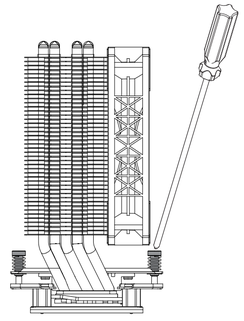

5 Cable Connection

将风扇4针插口连接到主板CPU FAN插座
Connect the fan 4 pin connector to the motherboard CPU FAN socket.

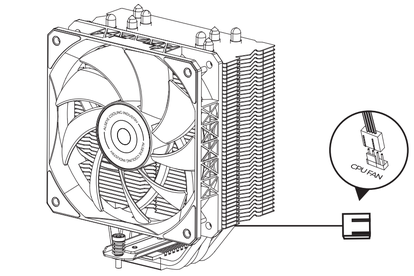

The S120 H5/ S120 H6 installation is the same as that of S120 H4

Back