COUGAR

FRZ 412 ARGB

SINGLE TOWER AIR COOLER

Absolute Cold. Total Control.

SPECIFICATIONS 产品规格 , 產品規格

Product Name 产品名称,產品名稱	CPU Socket 支援 CPU 插座类型,支援 CPU 插座類型
FRZ 412 ARGB / FRZ 412 ARGB WHITE	**Intel :** LGA 1851 / 1700 / 1200 / 115X **AMD :** AM5 / AM4

Heatsink 散热器,散熱器		Fans 风扇,風扇	
CPU touched base CPU 散热底座,CPU 散熱底座	HDT technology 热导管直触,熱導管直觸	Fan model 风扇型号,風扇型號	FRZ 120-B x 1 (Black version) FRZ 120-W x1 (White version)
Heatpipe 热导管,熱導管	Ø 6 mm x 4 pcs	Dimensions (WxDxH) 尺寸 (宽x深x高) 尺寸 (寬x深x高)	120 x 120 x 25 mm
Heatpipe finish 热导管表面,熱導管表面	Copper with Coating 铜烤漆,銅烤漆	Fan speed 风扇转速,風扇轉速	0-2500 ±10% RPM
Fin material 散热鳍片,散熱鰭片	Aluminum with Coating 铝烤漆,鋁烤漆	Air flow 风量,風量	74.52 CFM / 126.61 m^3/h (± 10%)
Display module rated voltage 数显额定电压,數顯額定電壓	5 VDC	Air pressure 风压,風壓	3.66 mm H_2O±10%
Display module rated current 数显额定电流,數顯額定電流	0.22 A	Acoustic noise 风扇噪音,風扇噪音	36.3 dB(A) (Max.)
Display module power consumption 数显功耗,數顯功耗	1.1 W	Rated voltage 额定电压,額定電壓	12 VDC (Fan) / 5 VDC (LED)
Top cover LED strip rated voltage 上盖LED灯条额定电压 上蓋LED燈條額定電壓	5 VDC	Rated current 额定电流,額定電流	0.32 A (Fan) / 0.24 A (LED)
Top cover LED strip rated current 上盖LED灯条额定电流 上蓋LED燈條額定電流	0.24 A	Power consumption 功耗,功耗	3.84 W (Fan) / 1.2 W (LED)
Top cover LED strip LED power 上盖LED灯条功耗,上蓋LED燈條功耗	1.2 W	Bearing type 轴承型式,軸承型式	Fluid Dynamic Bearing 动态液压轴承,動態液壓軸承
Dimension w/o Fan (WxLxH) 不含风扇尺寸(宽x深x高) 不含風扇尺寸(寬x深x高)	45 x 120 x 160 mm	Cable length 电源线长度,電源線長度	500 mm (Fan) / 520 mm (ARGB)
Dimension Incl. Fan (WxLxH) 包含风扇尺寸(宽x深x高) 包含風扇尺寸(寬x深x高)	70 x 120 x 160 mm	Connectors 接头规格,接頭規格	4-Pin PWM / 3-Pin ARGB
Net weight Incl. Fan 包含风扇净重(含风扇) 包含風扇淨重(含風扇)	726 g		
TDP 散热设计功耗,散熱設計功耗	240 W		
Display module cable length 数显线材长度,數顯線材長度	650 mm		
Display module cable connector 数显接头规格,數顯接頭規格	9-Pin USB 2.0		

*SOFTWARE SUPPORT : COUGAR Digital

ACCESSORY KIT 零件包

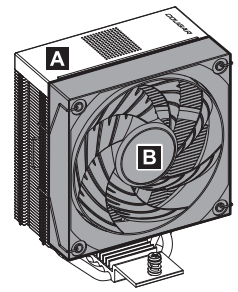

A x 1
FRZ 412 ARGB

B x 1
120mm ARGB PWM fan
FRZ 120-B (Black version)
FRZ 120-W (White version)
Pre-installed /预装 /預裝

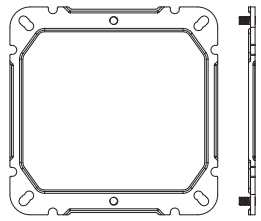

C x 1
Bracket (For both INTEL / AMD)
支架 (INTEL / AMD共用)

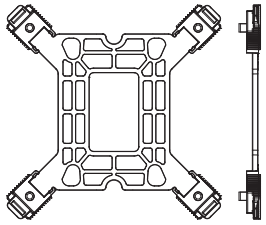

D x 1
INTEL Backplate
INTEL 背板

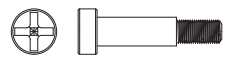

E x 4
Bracket Screw
(LGA 1851 / 1700 / 1200 / 115X)
支架螺丝,支架螺絲

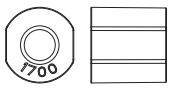

F x 4
Plastic Stand-off
(LGA 1851 / 1700)
塑胶柱,塑膠柱

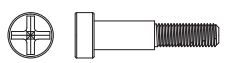

G x 4
Bracket Screw
(AM5 / AM4)
支架螺丝,支架螺絲



H x 4
Plastic Stand-off
(AM5 / AM4 , LGA 1200 / 115X)
塑胶柱,塑膠柱

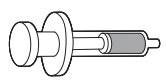

I x 1
Thermal Paste
散热膏,散熱膏

INTEL LGA 1851/1700/1200/115X

STEP 1

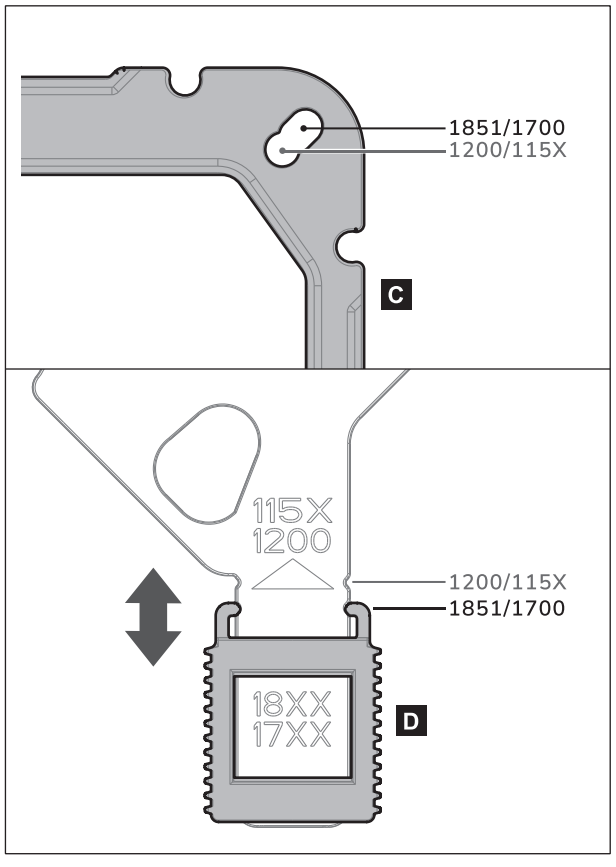

STEP 2

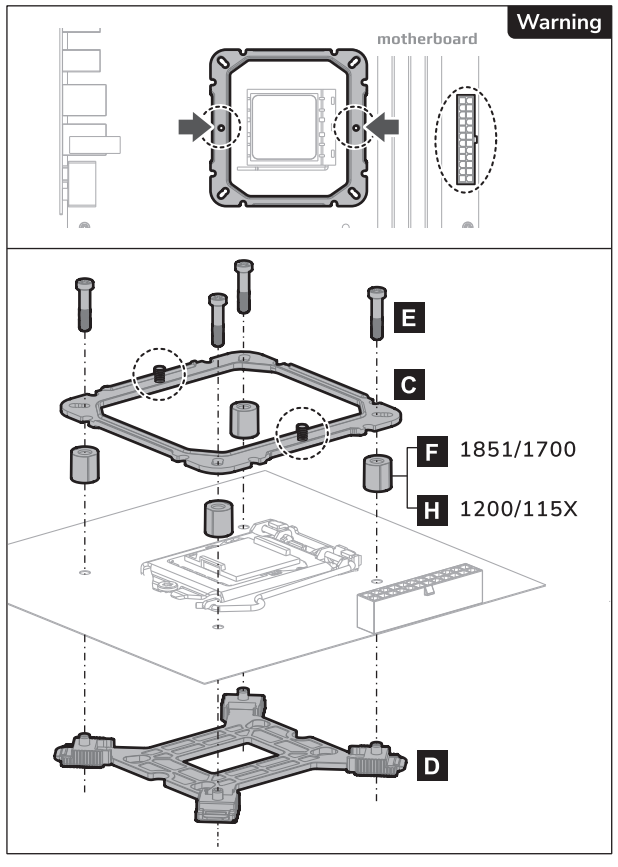

AMD AM5 / AM4

STEP 1

- Please remove the original AMD mounting bracket from the motherboard, but keep the backplate.
- 请先拆卸 AMD 主板原装扣具支架，并保留原背板。
- 請先拆卸 AMD 主機板原裝扣具支架，並保留原背板。

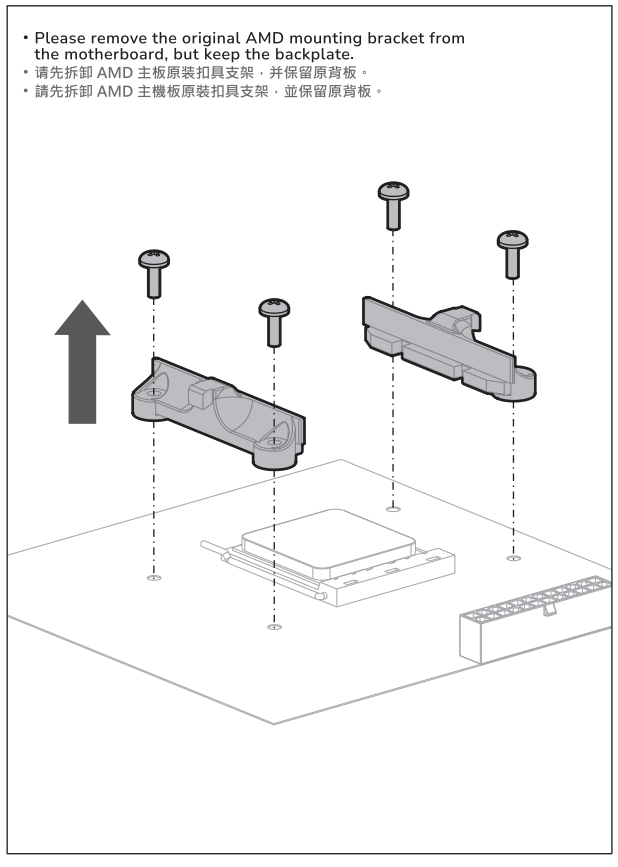

STEP 2

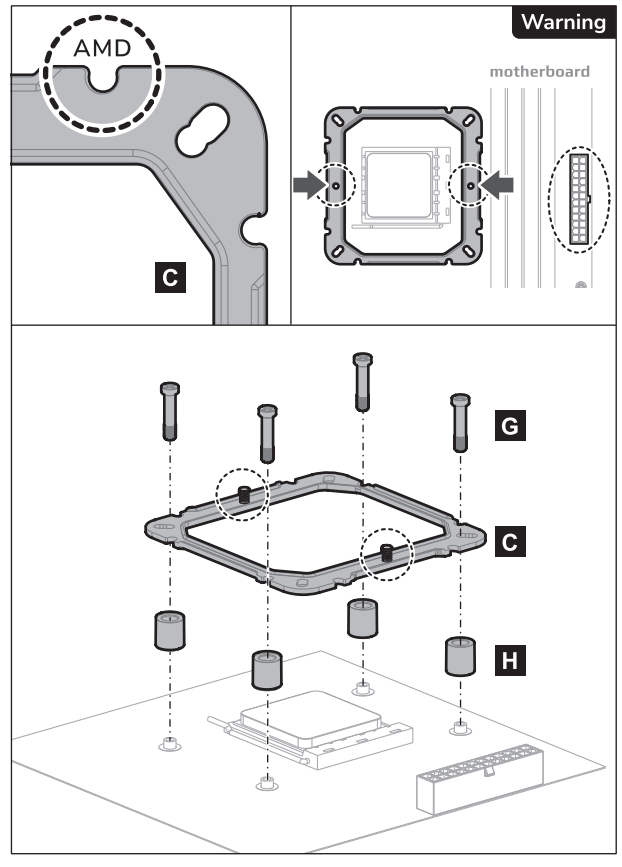

INTEL & AMD

STEP 3

PLEASE REMOVE THE PROTECTIVE FILM BEFORE INSTALLATION.
请在安装前撕除保护膜。
請在安裝前撕除保護膜。

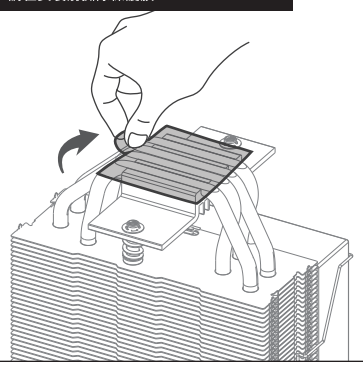

STEP 4

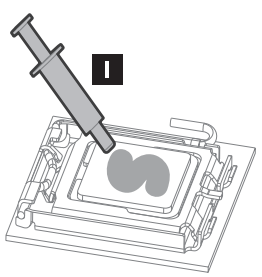

- Caution :
  Applying too much thermal paste will lower heat conductivity and cooling performance!
- 注意：散热膏涂抹过多会降低热传导性能与散热效能。
- 注意：散熱膏塗抹過多會降低熱傳導性能與散熱效能。

STEP 5

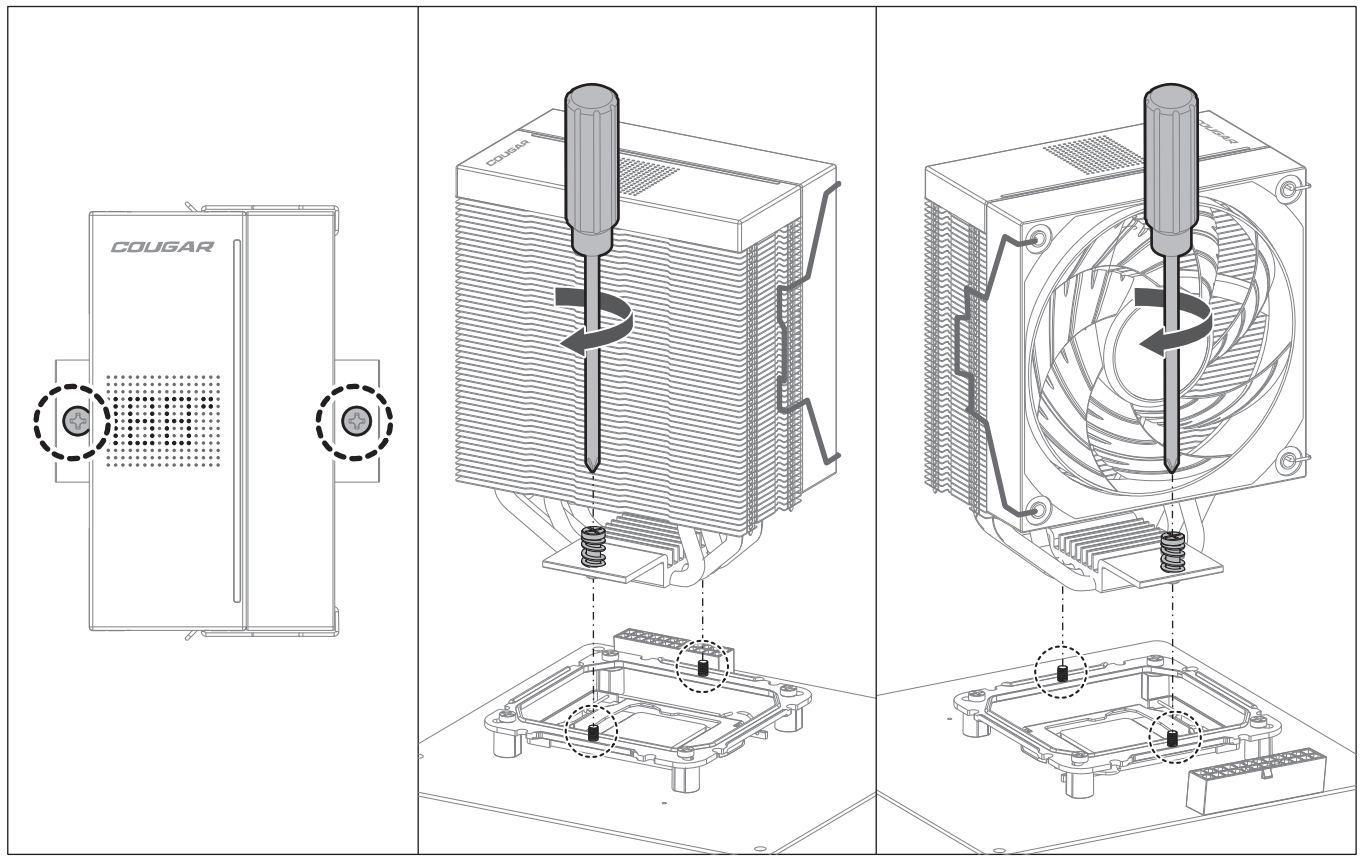

INTEL & AMD

STEP 6

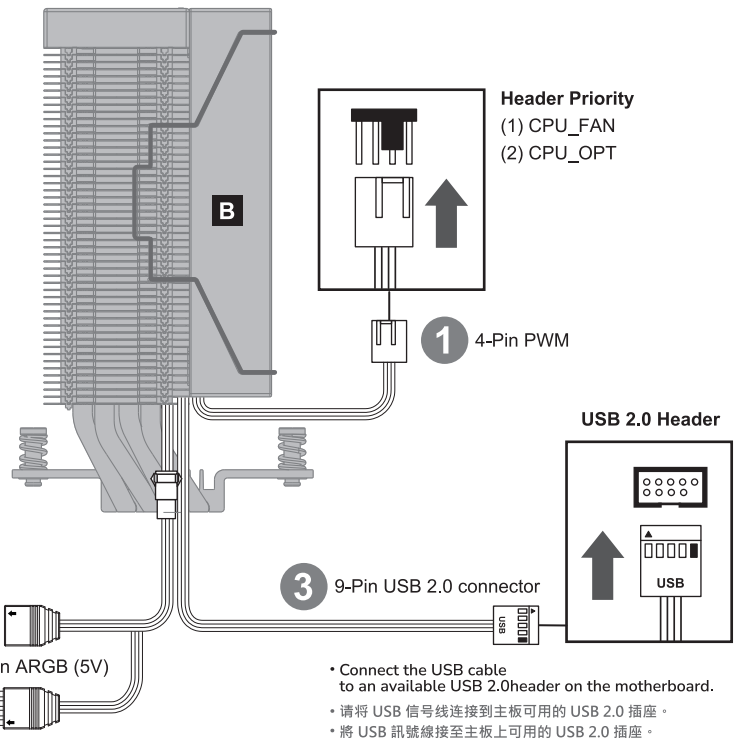

- Please check your motherboard is compatible with 5V 3pin Addressable RGB Header.
- 请先确认您的主板支援5V 3pin ARGB可编程接口。
- 請先確認您的主板支援5V 3pin ARGB可編程接口。

- Connect the USB cable to an available USB 2.0header on the motherboard.
- 请将 USB 信号线连接到主板可用的 USB 2.0 插座。
- 將 USB 訊號線接至主板上可用的 USB 2.0 插座。

SOFTWARE INSTALLATION

软体安装,軟體安裝

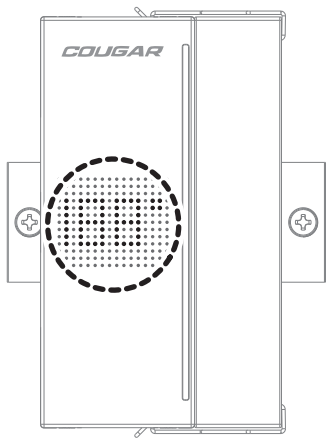

4

- Please download and install COUGAR Digital Software from the product page to enable the CPU or GPU temperature display.
- 请至产品网页下载安装 COUGAR Digital Software，即可于上盖显示 CPU 或 GPU 温度。
- 請至產品網頁下載安裝 COUGAR Digital Software，即可於上蓋顯示 CPU 或 GPU 温度。

COUGAR Digital Software

Software Download

GLOBAL WARRANTY POLICY

全球保固条款 , 全球保固條款

WARRANTY PERIODS OF COUGAR GAMING DEVICES

Product : COUGAR FRZ 412 ARGB single tower air cooler
Warranty : 3 Years
This warranty gives you specific legal rights. You may also have other rights granted under local law. These rights may vary.

COUGAR电竞产品保固期 , COUGAR電競產品保固期

产品名称 , 產品名稱 : COUGAR FRZ 412 ARGB 单塔散热器, COUGAR FRZ 412 ARGB 單塔散熱器
保固期 , 保固期 : 3年 , 3年
本保固条款赋予您特定的合法权利，而您所在的地区可能也会赋予您其他权利。
本保固條款賦予您特定的合法權利，而您所在的地區可能也會賦予您其他權利。

WARRANTY AGREEMENT

- If the product has defects in material or manufacture, COUGAR will provide product repair and replacement service within the warranty period.
- Our warranty service is based on the date of the invoice or warranty card (must be affixed with the store stamp).
- If you lose the aforementioned evidence, we will apply the original shipping date of the product as the beginning date of warranty period. The shipping date will be identified by the product serial number(S/N).

CONDITIONS WHERE FREE MAINTENANCE IS NOT PROVIDED

- Any fault or damage caused by natural disasters (including storm, fire, flood, thunder, earthquake, etc).
- Any fault or damage caused by accidental factors and man-made reasons (including hit, scrape, crash,moving, compression, stain, corrosion, use of incurred on unsuitable voltage, computer virus, riot, misuse,malicious damage, etc).
- Use in an improper operating environment (including high temperature, high humidity, water inflow, etc).
- Inability to provide the product warranty card, purchase receipt or invoice to prove the product is still within the warranty period and the shipping date of the product is out of warranty.
- The warranty card or product serial number has been altered or its number is hard to identify.
- The warranty period has expired.
- Any fault or damage caused by non-compliance with regulations stated on the user manual or improper, rough and careless treatment.
- Any fault or damage caused by use of parts not certified by COUGAR original manufacturer.
- The problem is caused by improper repair or adjustment by the buyer or any manufacturer without authorization from COUGAR.
- The product is not acquired from an authorized distributor of the company or is acquired from illicit sources.
- Paper carton, instruction and other accessories are not warranted.

DISCLAIMERS

- COUGAR product is not authorized for use as critical components in life support device or for incorrect application software or malfunction of the product.
- COUGAR is not liable for the death or damage of person or loss of property when product is using as,including but not limited to, medical equipment, military equipment, traffic equipment and disaster prevention system.
- COUGAR is not liable for any damages, expenses, lost data, lost revenues, lost savings, lost profits, or any incidental or consequential damages due to using defect product of COUGAR.

LEGAL NOTICES

- This manual was created by Compucase Enterprise and may not be completely or partially copied, passed on, distributed or stored without written consent by Compucase Enterprise.
- COUGAR® is a registered brand of Compucase Enterprise Other product and company names mentioned in this documentation may be brands or trademarks of their respective owners.
- Compucase Enterprise reserves the right to make changes concerning the contents of the manual and the technical data of the product without previous announcement.

ДАТА ИЗГОТОВЛЕНИЯ ПРОДУКЦИИ

год и месяц изготовления продукции указаны в серийном номере продукта.
(существует 2 способа определения даты изготовления, оба способа описаны ниже)

Ⓐ После S/N: первые две цифры означают год, вторые две – месяц изготовления.
Например, S/N: H**2202**000001 означает,
что товар был произведен в феврале 2022 года.

Ⓑ После S/N: если указаны буквы,
то две буквы представляют цифры из таблицы ниже, и означают год,
последующие две цифры – месяц изготовления.

Например, S/N: D**BB02**REVI000001 означает,
что товар был произведен в феврале 2022 года.

A	B	C	D	E	F	G	H	I	J
1	2	3	4	5	6	7	8	9	0

• Например,
BB = 22 = 2022 год

- يجب تركيب كل قطعة بحذر و بمكانها المناسب.
- من يقوم بعلمية التركيب الشخص المختص فقط.

تعليمات التركيب و الأمان:

- عند التركيب أو التفكيك يجب التأكد من أن جميع الأسلاك مفصولة عن الكهرباء.
- يجب اتخاذ الإحترازات اللازمة لمنع الصعق الكهربائي.
- يجب إرتداء الملابس المناسبة أثناء تركيب/ تجميع الكمبيوتر.

MANUFACTURER CONTACT

制造商联系方式 , 製造商聯繫方式

COUGAR
www.cougar.tech

Compucase Enterprise Co., Ltd.
All rights reserved.

详细保固条件
请扫描二维码

Official website





Made in China