COUGAR

FRZ 612 ARGB

DUAL TOWER AIR COOLER

Absolute Cold. Total Control.

SPECIFICATIONS 产品规格 , 產品規格

Product Name 产品名称,產品名稱	**CPU Socket** 支援 CPU 插座类型,支援 CPU 插座類型
FRZ 612 ARGB / FRZ 612 ARGB WHITE	**Intel :** LGA 1851 / 1700 / 1200 / 115X **AMD :** AM5 / AM4

Heatsink 散热器,散熱器	
CPU touched base CPU 散热底座,CPU 散熱底座	Reflow 回流焊,回流焊
Heatpipe 热导管,熱導管	Ø 6 mm x 6 pcs
Heatpipe finish 热导管表面,熱導管表面	Copper with Coating 铜烤漆,銅烤漆
Fin material 散热鳍片,散熱鰭片	Aluminum with Coating 铝烤漆,鋁烤漆
Display module rated voltage 数显额定电压,數顯額定電壓	5 VDC
Display module rated current 数显额定电流,數顯額定電流	0.22 A
Display module power consumption 数显功耗,數顯功耗	1.1 W
Top cover LED strip rated voltage 上盖LED灯条额定电压 上蓋LED燈條額定電壓	5 VDC
Top cover LED strip rated current 上盖LED灯条额定电流 上蓋LED燈條額定電流	0.24 A
Top cover LED strip LED power 上盖LED灯条功耗,上蓋LED燈條功耗	1.2 W
Dimension w/o Fan (WxLxH) 不含风扇尺寸(宽x深x高) 不含風扇尺寸(寬x深x高)	110 x 120 x 160mm
Dimension Incl. Fan (WxLxH) 包含风扇尺寸(宽x深x高) 包含風扇尺寸(寬x深x高)	135 x 120 x 160mm
Net weight Incl. Fan 包含风扇净重(含风扇) 包含風扇淨重(含風扇)	1185g
TDP 散热设计功耗,散熱設計功耗	260W
Display module cable length 数显线材长度,數顯線材長度	650 mm
Display module cable connector 数显接头规格,數顯接頭規格	9-Pin USB 2.0

Fans 风扇,風扇		
Fan model 风扇型号,風扇型號	FRZ 120-B x 1 (Black version) FRZ 120-W x1 (White version)	FRZ 120-MB x 1 (Black version) FRZ 120-MW x1 (White version)
Dimensions (WxDxH) 尺寸 (宽x深x高) 尺寸 (寬x深x高)	120 x 120 x 25 mm	
Fan speed 风扇转速,風扇轉速	0-2500 ±10% RPM	
Air flow 风量,風量	74.52 CFM / 126.61 m^3/h (± 10%)	
Air pressure 风压,風壓	3.66 mm H_2O±10%	
Acoustic noise 风扇噪音,風扇噪音	36.3 dB(A) (Max.)	
Rated voltage 额定电压,額定電壓	12 VDC (Fan) / 5 VDC (LED)	12 VDC (Fan)
Rated current 额定电流,額定電流	0.32 A (Fan) / 0.24 A (LED)	0.32 A (Fan)
Power consumption 功耗,功耗	3.84 W (Fan) / 1.2 W (LED)	3.84 W (Fan)
Bearing type 轴承型式,軸承型式	Fluid Dynamic Bearing 动态液压轴承,動態液壓軸承	
Cable length 电源线长度,電源線長度	500 mm (Fan) / 520 mm (ARGB)	510 mm (Fan)
Connectors 接头规格,接頭規格	4-Pin PWM / 3-Pin ARGB	4-Pin PWM

*SOFTWARE SUPPORT : COUGAR Digital

ACCESSORY KIT 零件包

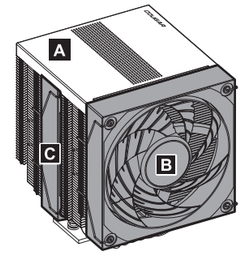

A x 1
FRZ 612 ARGB

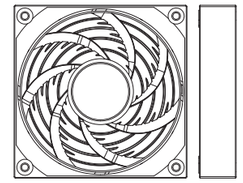

C x 1
120mm PWM fan
FRZ 120-MB x 1 (Black version)
FRZ 120-MW x 1 (White version)

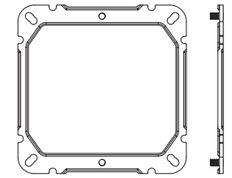

D x 1
Bracket (For both INTEL / AMD)
支架 (INTEL / AMD共用)

B x 1
120mm ARGB PWM fan
FRZ 120-B (Black version)
FRZ 120-W (White version)
Pre-installed /預裝 /預裝

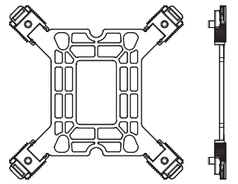

E x 1
INTEL Backplate
INTEL 背板

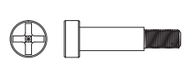

F x 4
Bracket Screw
(LGA 1851 / 1700 / 1200 / 115X)
支架螺丝,支架螺絲

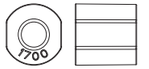

G x 4
Plastic Stand-off
(LGA 1851 / 1700)
塑胶柱,塑膠柱

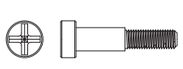

H x 4
Bracket Screw
(AM5 / AM4)
支架螺丝,支架螺絲



I x 4
Plastic Stand-off
(AM5 / AM4 , LGA 1200 / 115X)
塑胶柱,塑膠柱

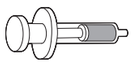

J x 1
Thermal Paste
散热膏,散熱膏



K x 4
Fan Clips
(Pre-installed x 2, Included x 2)
风扇扣具
(预装 x 2, 独立包装 x 2)
風扇扣具
(預裝 x 2, 獨立包裝 x 2)

INTEL LGA 1851/1700/1200/115X

AMD AM5 / AM4

INTEL & AMD

STEP 1

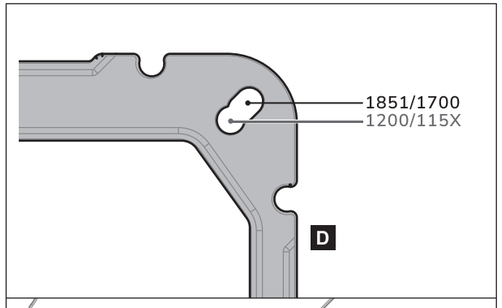

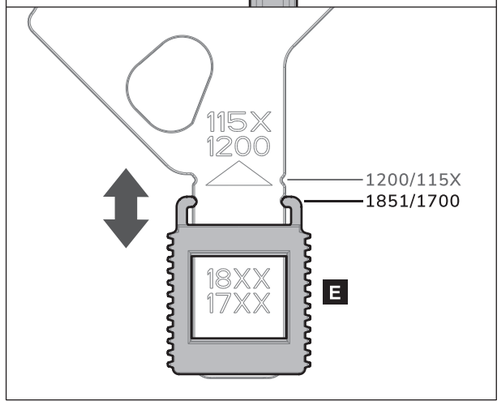

STEP 2

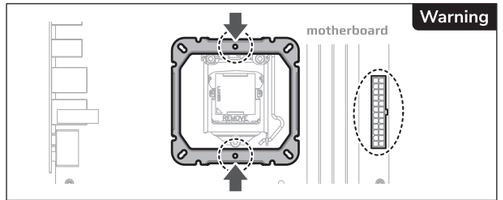

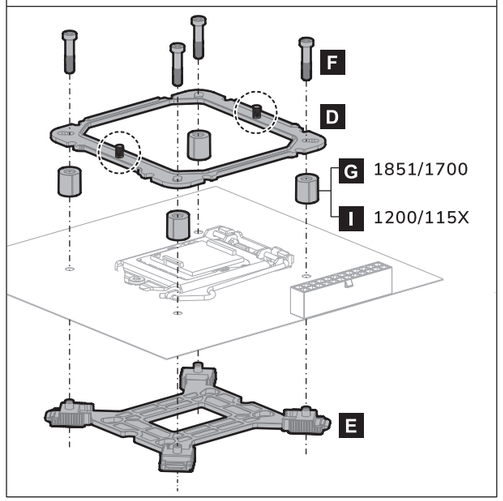

STEP 1

- Please remove the original AMD mounting bracket from the motherboard, but keep the backplate.
- 请先拆卸 AMD 主板原装扣具支架，并保留原背板。
- 請先拆卸 AMD 主機板原裝扣具支架，並保留原背板。

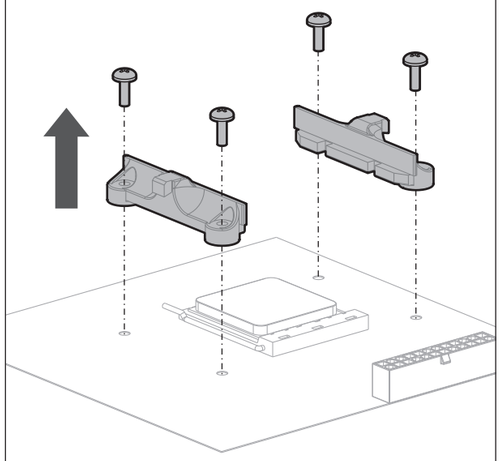

STEP 2

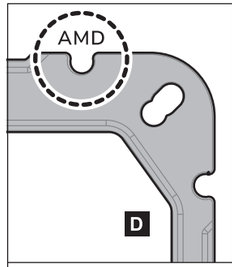

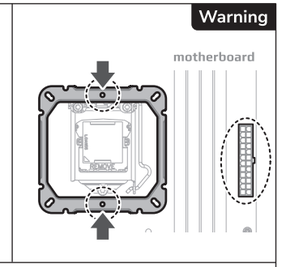

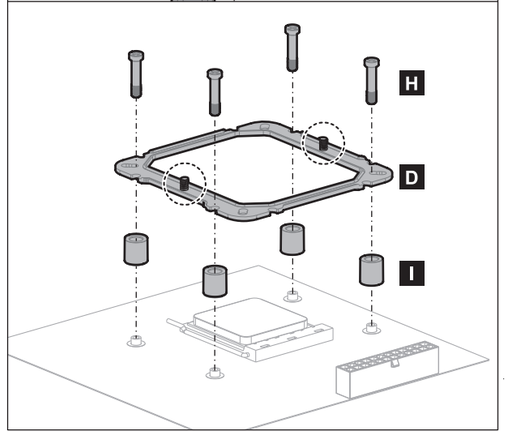

STEP 3

PLEASE CHECK RAM HEIGHT BFFORE INSTALLATION.
安装前请确认记忆体高度。
安裝前請確認記憶體高度。



- Recommended RAM clearance: ≤ 43mm.
- For RAM exceeding 43mm, the fan position can be adjusted upward.
- Note: Limiting upward adjustment to 10mm or less ensures optimal cooling performance.
- 建议内存限高：≤43mm。
- 若内存超过 43mm，可将风扇位置向上微调。
- 请注意：风扇向上调整请勿超过 10mm，以确保最佳散热效能。
- 建議記憶體限高：≤43mm。
- 若記憶體超過 43mm，可將風扇位置向上微調。
- 請注意：風扇向上調整請勿超過 10mm，以確保最佳散熱效能。

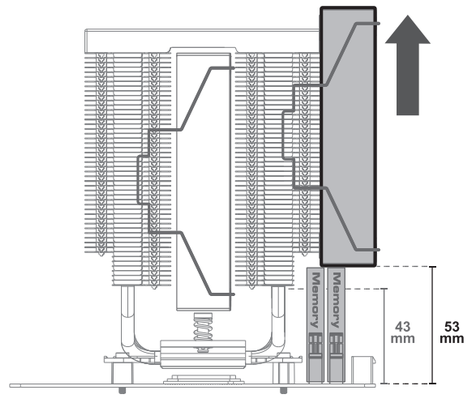

INTEL & AMD

- Adjusting the fan upward by 10mm increases the overall height of the FRZ 612 ARGB from 160mm to 170mm. Please ensure your chassis has sufficient clearance.
- 风扇向上调整 10mm 后，FRZ 612 ARGB 的整体高度将从 160mm 增加至 170mm，请务必确认您的机箱有足够的安装空间。
- 風扇向上調整 10mm 後，FRZ 612 ARGB 的整體高度將從 160mm 增加至 170mm，請務必確認您的機殼有足夠的安裝空間。

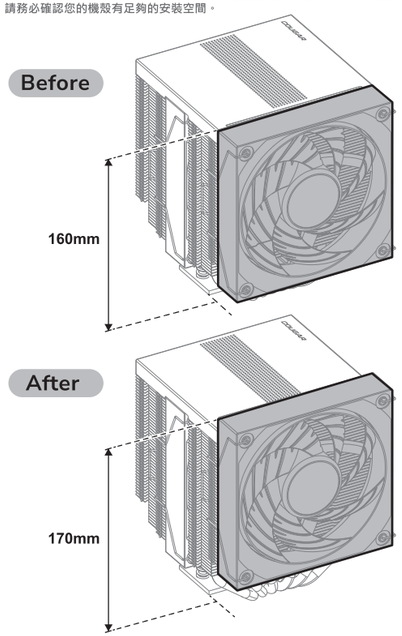

STEP 4

PLEASE REMOVE THE PROTECTIVE FILM BEFORE INSTALLATION.
请在安装前撕除保护膜。
請在安裝前撕除保護膜。

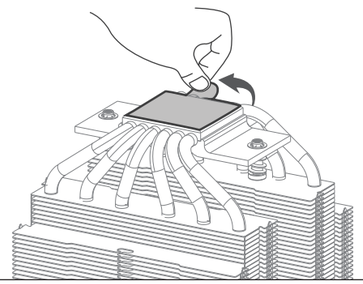

STEP 5

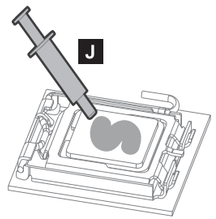

- Caution :
  Applying too much thermal paste will lower heat conductivity and cooling performance!
- 注意：散热膏涂抹过多会降低热传导性能与散热效能。
- 注意：散熱膏塗抹過多會降低熱傳導性能與散熱效能。

STEP 6

The top cover is connected by internal cables. Handle with care and DO NOT pull or strain the cables to prevent damage.
注意：上盖内侧连有线材，操作时请勿过度拉扯，以免损坏连接线。
注意：上蓋內側連有線材，操作時請勿過度拉扯，以免損壞連接線。

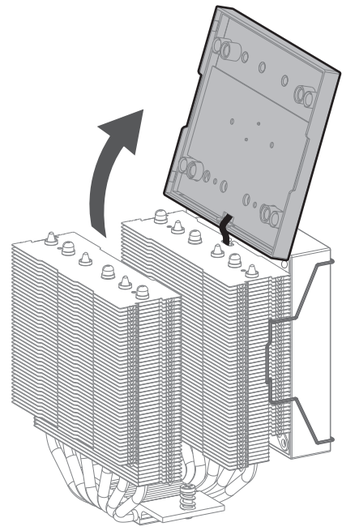

STEP 7

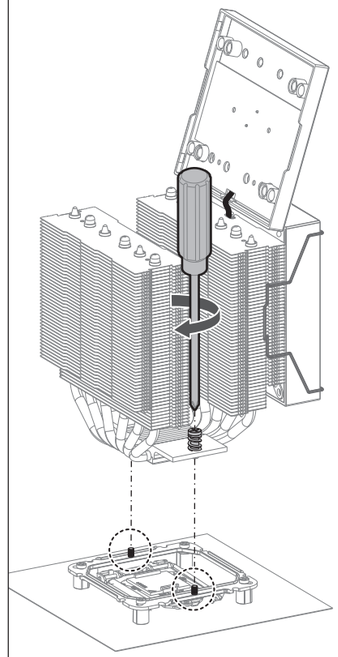

STEP 8

Note: Please check the fan installation direction.
注意：风扇安装方向。
注意：風扇安裝方向。

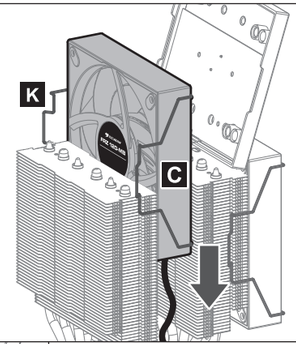

STEP 9

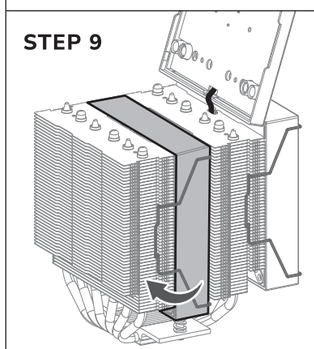

STEP 10

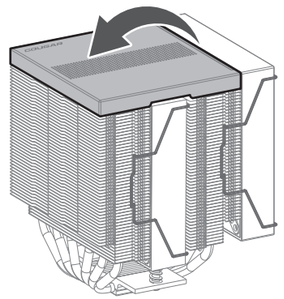

INTEL & AMD

STEP 11

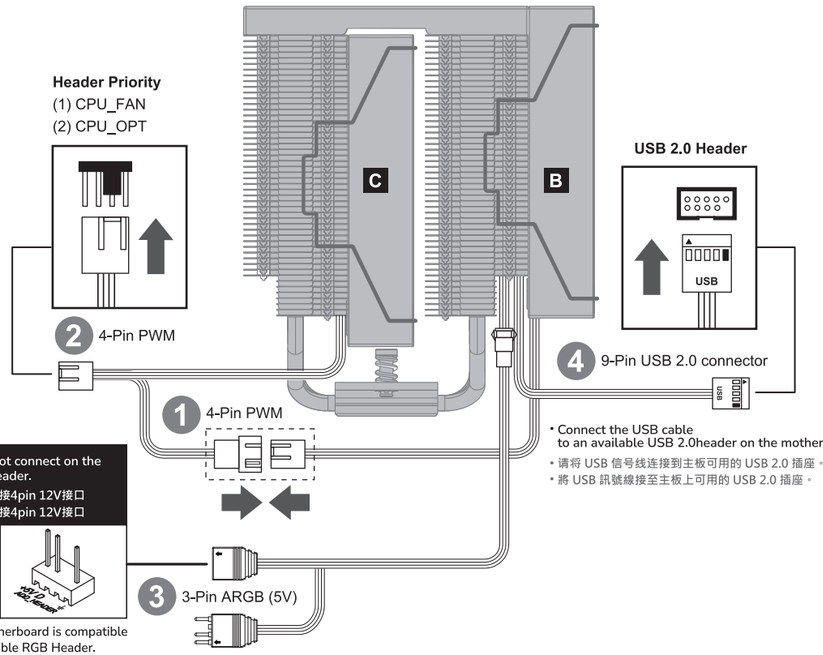

- Connect the USB cable to an available USB 2.0header on the motherboard.
- 请将 USB 信号线连接到主板可用的 USB 2.0 插座。
- 將 USB 訊號線接至主板上可用的 USB 2.0 插座。

Please do not connect on the 4pin 12V header.
注意：请勿连接4pin 12V接口
注意：請勿連接4pin 12V接口

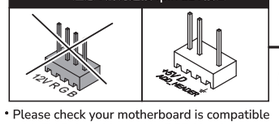

- Please check your motherboard is compatible with 5V 3pin Addressable RGB Header.
- 请先确认您的主板支援5V 3pin ARGB可编程接口。
- 請先確認您的主板支援5V 3pin ARGB可編程接口。

SOFTWARE INSTALLATION

软体安装,軟體安裝

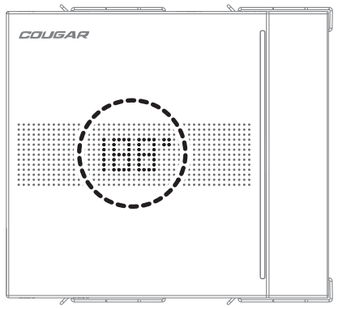

5

- Please download and install COUGAR Digital Software from the product page to enable the CPU or GPU temperature display.
- 请至产品网页下载安装 COUGAR Digital Software，即可于上盖显示 CPU 或 GPU 温度。
- 請至產品網頁下載安裝 COUGAR Digital Software，即可於上蓋顯示 CPU 或 GPU 溫度。

°C
°F

COUGAR
Digital Software

Software
Download

GLOBAL WARRANTY POLICY

全球保固条款 , 全球保固條款

WARRANTY PERIODS OF COUGAR GAMING DEVICES

Product : COUGAR FRZ 612 ARGB dual tower air cooler
Warranty : 3 Years
This warranty gives you specific legal rights. You may also have other rights granted under local law. These rights may vary.

COUGAR电竞产品保固期 , COUGAR電競產品保固期

产品名称 , 產品名稱 : COUGAR FRZ 612 ARGB 双塔散热器, COUGAR FRZ 612 ARGB 雙塔散熱器
保固期 , 保固期 : 3年 , 3年
本保固条款赋予您特定的合法权利，而您所在的地区可能也会赋予您其他权利。
本保固條款賦予您特定的合法權利，而您所在的地區可能也會賦予您其他權利。

WARRANTY AGREEMENT

- If the product has defects in material or manufacture, COUGAR will provide product repair and replacement service within the warranty period.
- Our warranty service is based on the date of the invoice or warranty card (must be affixed with the store stamp).
- If you lose the aforementioned evidence, we will apply the original shipping date of the product as the beginning date of warranty period. The shipping date will be identified by the product serial number(S/N).

CONDITIONS WHERE FREE MAINTENANCE IS NOT PROVIDED

- Any fault or damage caused by natural disasters (including storm, fire, flood, thunder, earthquake, etc).
- Any fault or damage caused by accidental factors and man-made reasons (including hit, scrape, crash,moving, compression, stain, corrosion, use of incurred on unsuitable voltage, computer virus, riot, misuse,malicious damage, etc).
- Use in an improper operating environment (including high temperature, high humidity, water inflow, etc).
- Inability to provide the product warranty card, purchase receipt or invoice to prove the product is still within the warranty period and the shipping date of the product is out of warranty.
- The warranty card or product serial number has been altered or its number is hard to identify.
- The warranty period has expired.
- Any fault or damage caused by non-compliance with regulations stated on the user manual or improper, rough and careless treatment.
- Any fault or damage caused by use of parts not certified by COUGAR original manufacturer.
- The problem is caused by improper repair or adjustment by the buyer or any manufacturer without authorization from COUGAR.
- The product is not acquired from an authorized distributor of the company or is acquired from illicit sources.
- Paper carton, instruction and other accessories are not warranted.

DISCLAIMERS

- COUGAR product is not authorized for use as critical components in life support device or for incorrect application software or malfunction of the product.
- COUGAR is not liable for the death or damage of person or loss of property when product is using as,including but not limited to, medical equipment, military equipment, traffic equipment and disaster prevention system.
- COUGAR is not liable for any damages, expenses, lost data, lost revenues, lost savings, lost profits, or any incidental or consequential damages due to using defect product of COUGAR.

LEGAL NOTICES

- This manual was created by Compucase Enterprise and may not be completely or partially copied, passed on, distributed or stored without written consent by Compucase Enterprise.
- COUGAR® is a registered brand of Compucase Enterprise Other product and company names mentioned in this documentation may be brands or trademarks of their respective owners.
- Compucase Enterprise reserves the right to make changes concerning the contents of the manual and the technical data of the product without previous announcement.

ДАТА ИЗГОТОВЛЕНИЯ ПРОДУКЦИИ

год и месяц изготовления продукции указаны в серийном номере продукта.
(существует 2 способа определения даты изготовления, оба способа описаны ниже)

A После S/N: первые две цифры означают год, вторые две – месяц изготовления.
Например, S/N: H**2202**000001 означает,
что товар был произведен в феврале 2022 года.

B После S/N: если указаны буквы,
то две буквы представляют цифры из таблицы ниже, и означают год,
последующие две цифры – месяц изготовления.

Например, S/N: D**BB02**REVI000001 означает,
что товар был произведен в феврале 2022 года.

A	B	C	D	E	F	G	H	I	J
1	2	3	4	5	6	7	8	9	0

- Например,
  BB = 22 = 2022 год

- يجب تركيب كل قطعة بحذر و بمكانها المناسب.
- من يقوم بعلمية التركيب الشخص المختص فقط.

تعليمات التركيب و الأمان:

- عند التركيب أو التفكيك يجب التأكد من أن جميع الأسلاك مفصولة عن الكهرباء.
- يجب اتخاذ الإحترازات اللازمة لمنع الصعق الكهربائي.
- يجب إرتداء الملابس المناسبة أثناء تركيب/ تجميع الكمبيوتر.

MANUFACTURER CONTACT

制造商联系方式 , 製造商聯繫方式

COUGAR
www.cougar.tech

Compucase Enterprise Co., Ltd.
All rights reserved.

详细保固条件
请扫描二维码

Official website

FR Cet appareil se recycle
À DÉPOSER EN MAGASIN
OU
À DÉPOSER EN DÉCHÈTERIE
Points de collecte sur www.quefairedemesdechets.fr
Privilégiez la réparation ou le don de votre appareil !

Made in China

FR