STEP by STEP INSTALLATION GUIDE



BOREAS E1 210 LITE
CPU Air Cooler

BOREAS E1 210 MONO
CPU Air Cooler

BOREAS E1 210 BLUE
CPU Air Cooler

BOREAS E1 210 RED
CPU Air Cooler

Package Contents

A 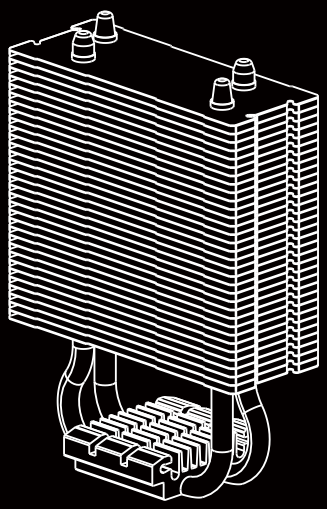 ×1

B 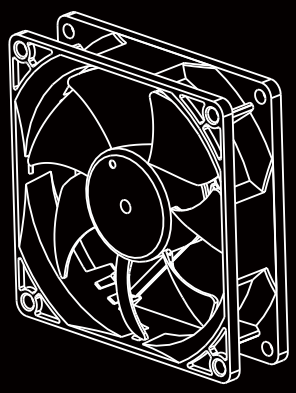 ×1

C 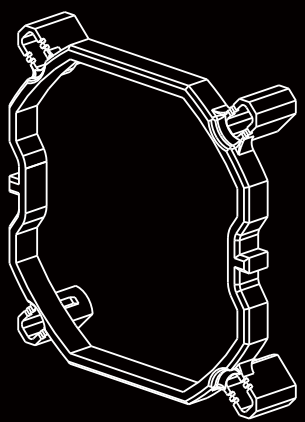 ×1

D 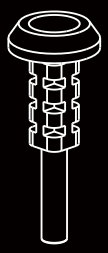 ×4

E 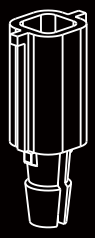 ×4

F 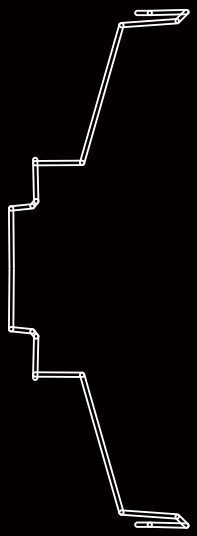 ×2

G 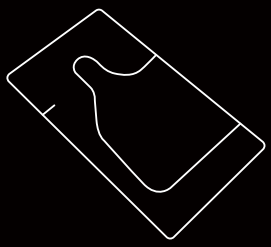 ×1

INTEL / AMD

1 Turn off the computer before installing

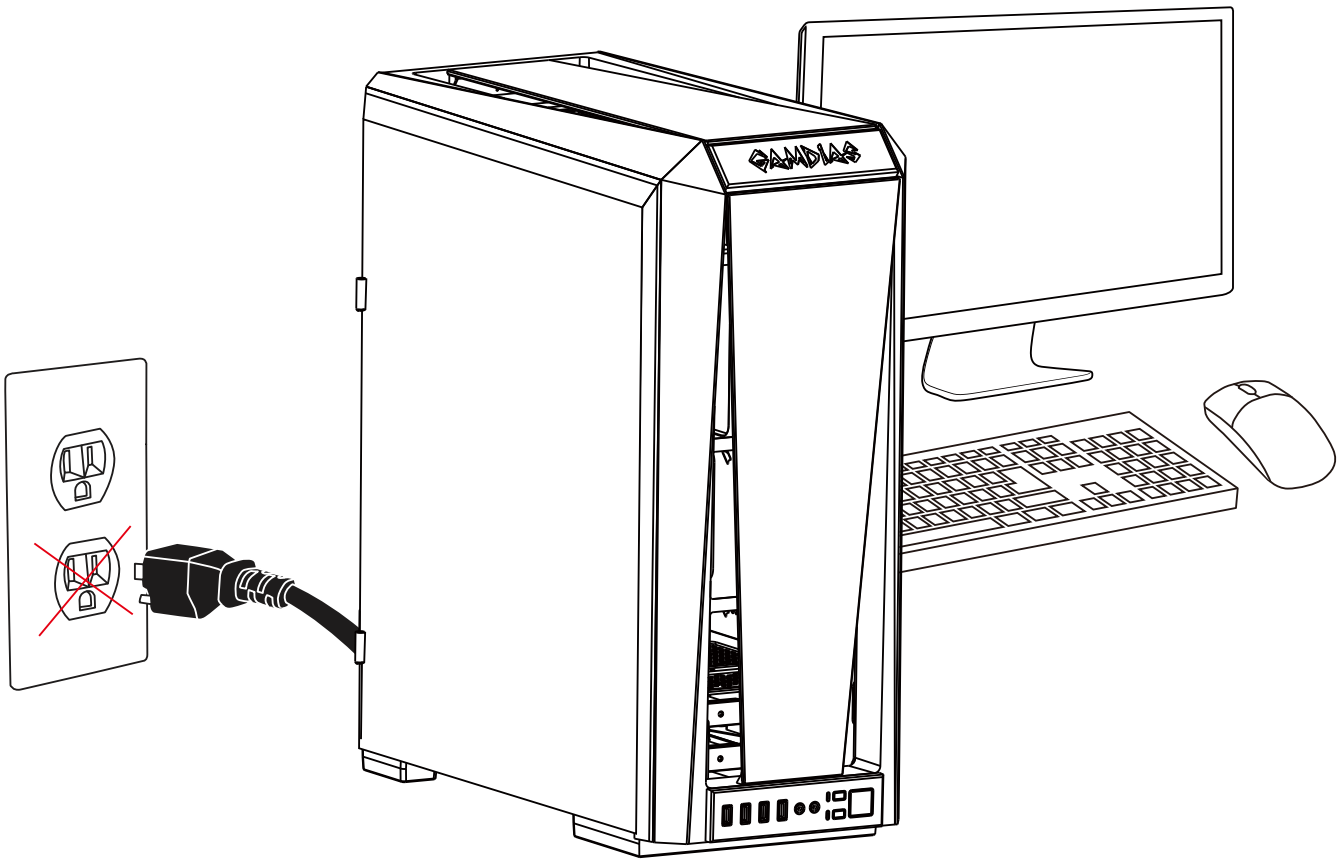

2

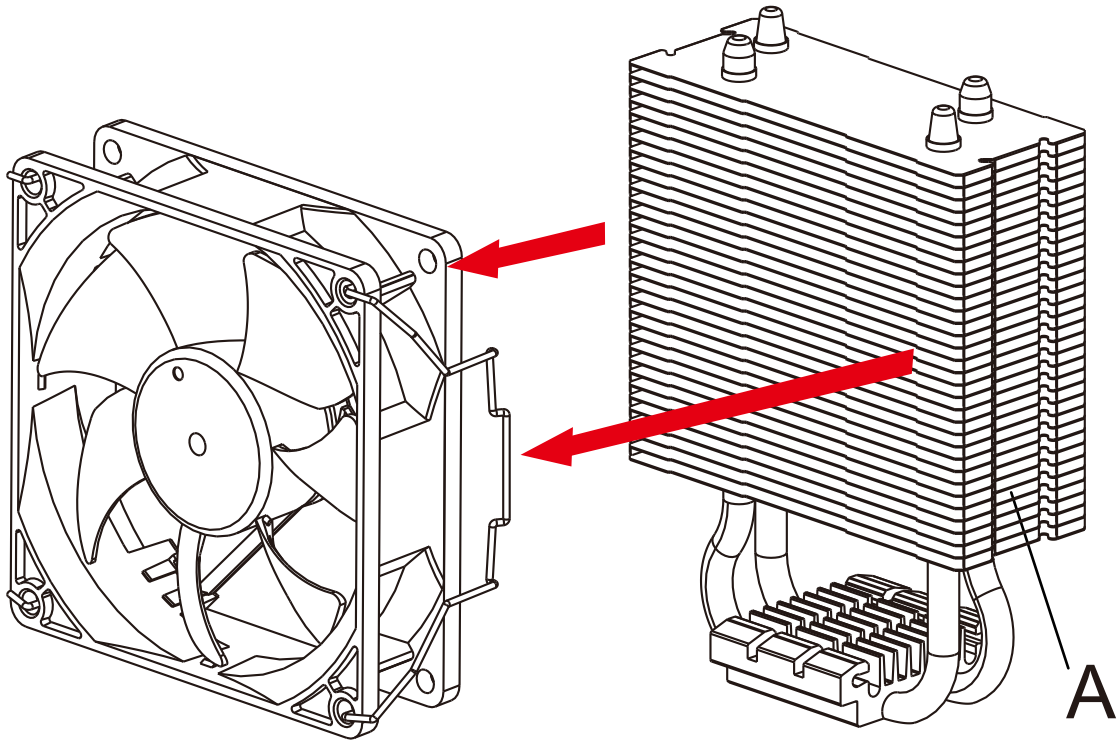

3

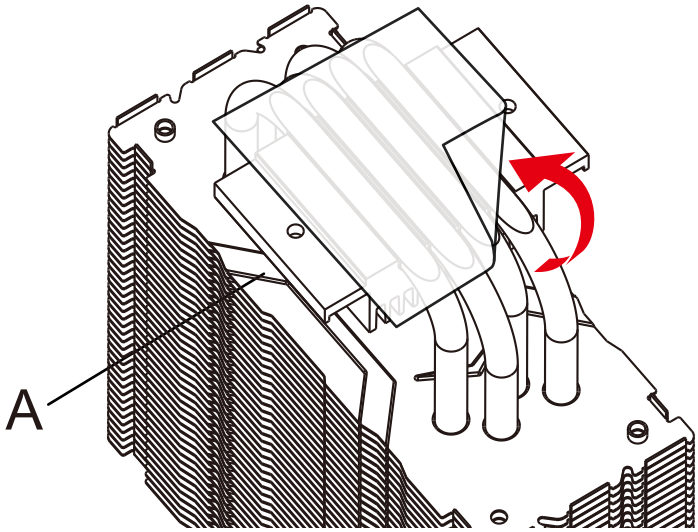

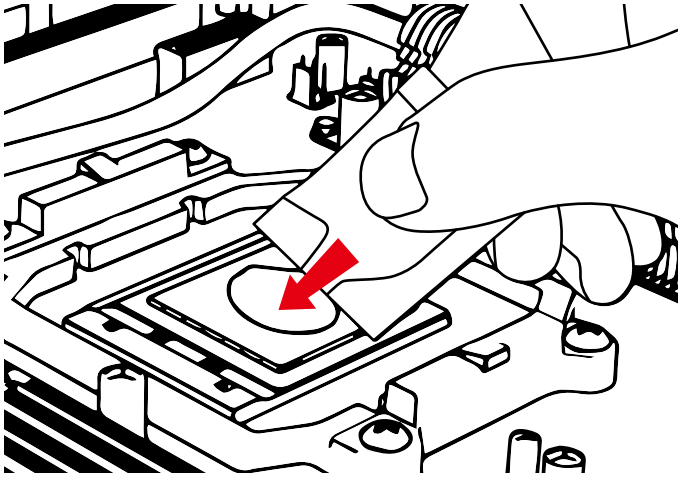

INTEL (LGA1151/1150/1155/1156/1200/1700)

4

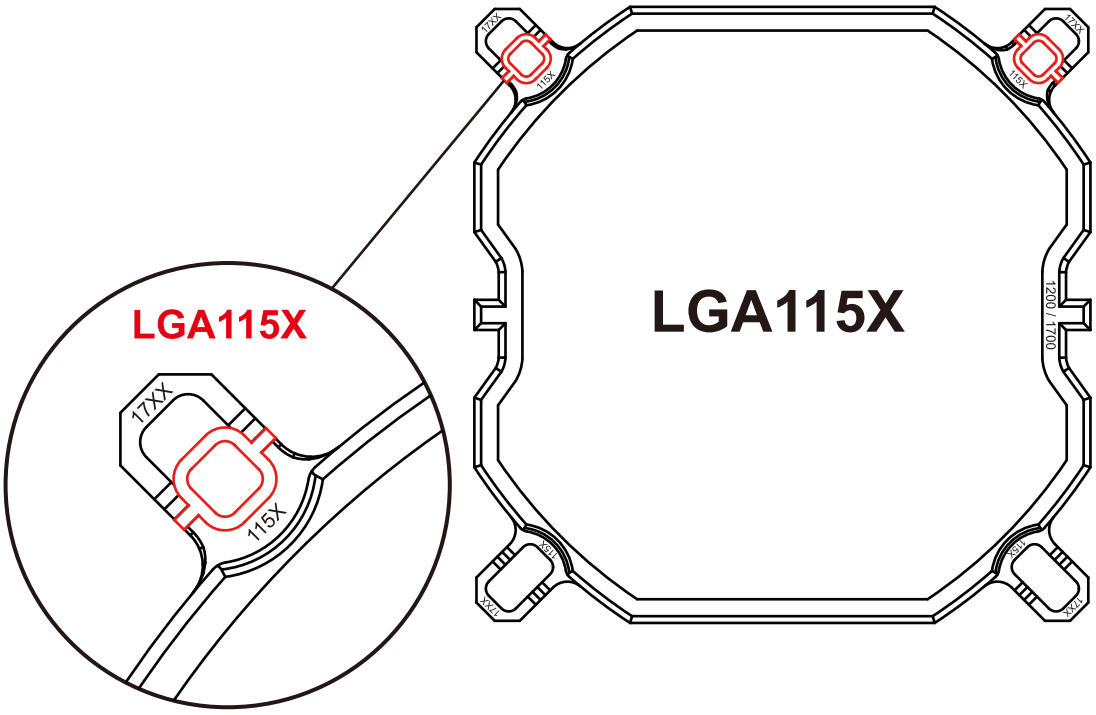

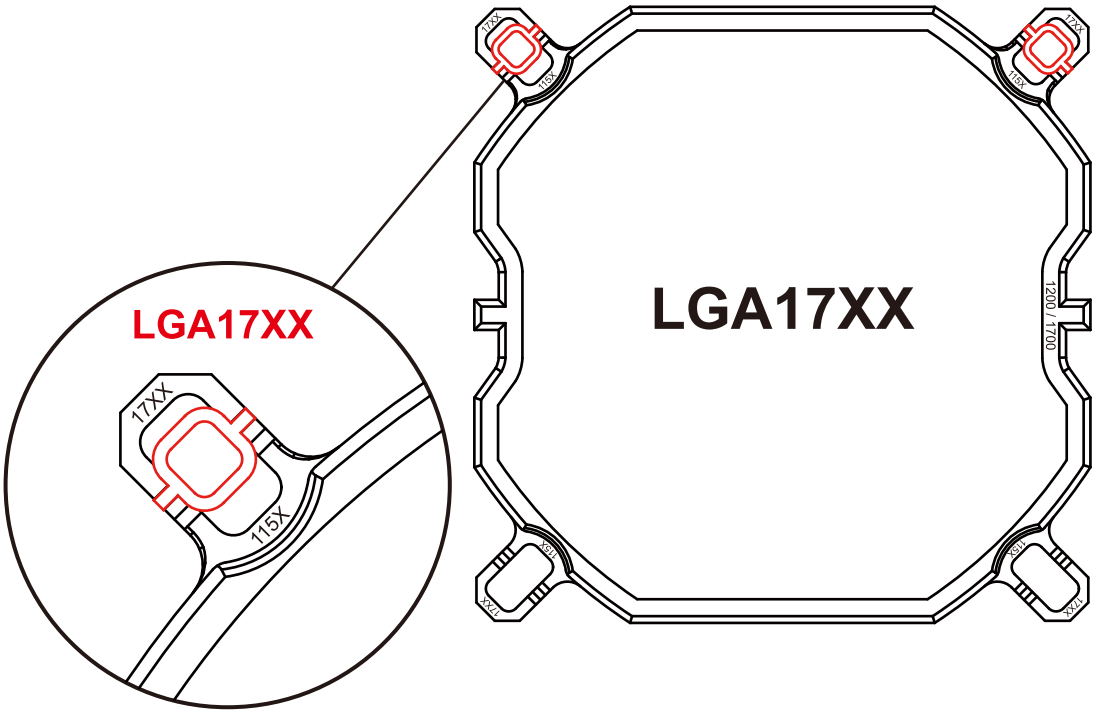

INTEL (LGA1151/1150/1155/1156/1200/1700)

5

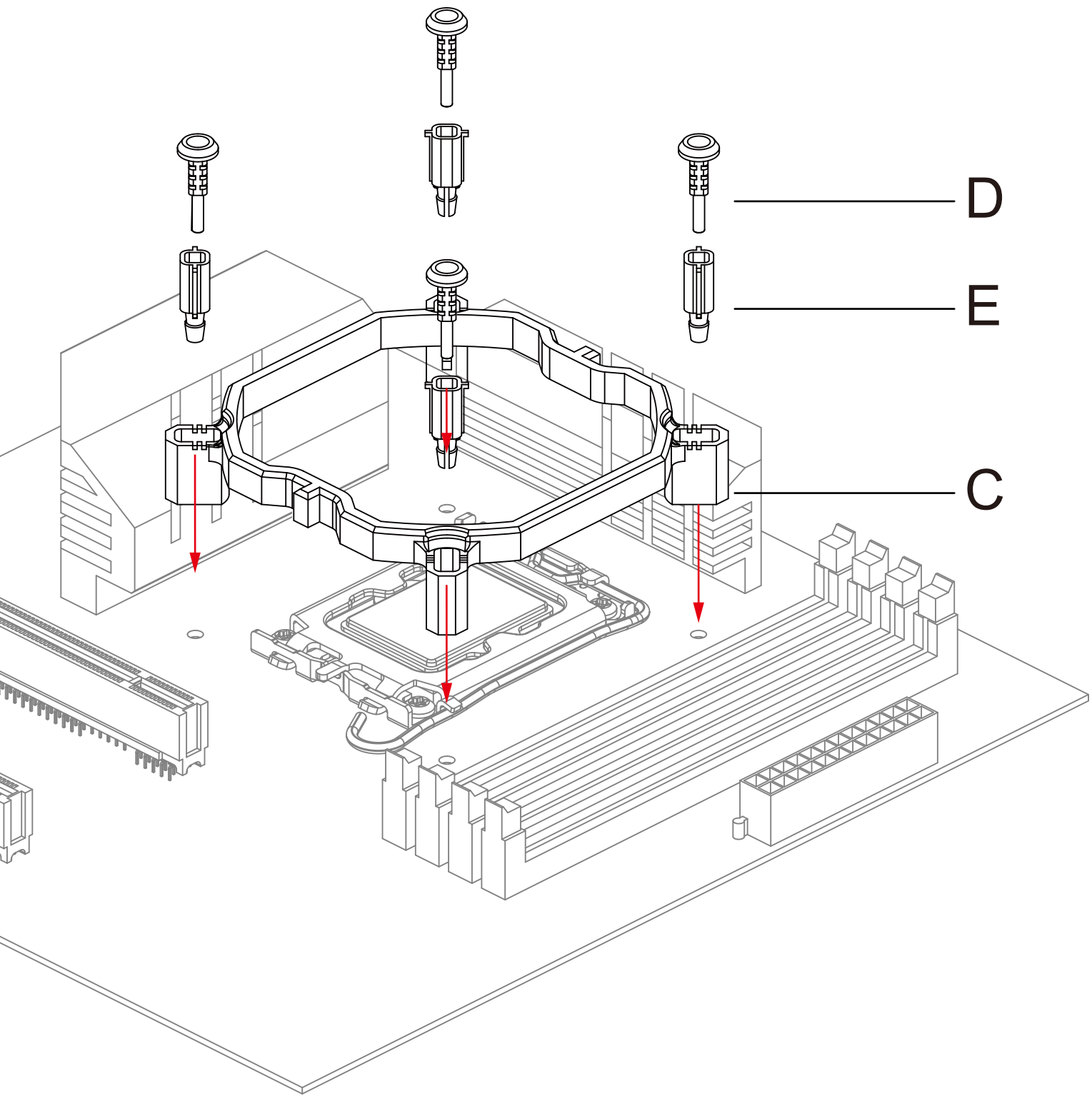

INTEL (LGA1151/1150/1155/1156/1200/1700)

6

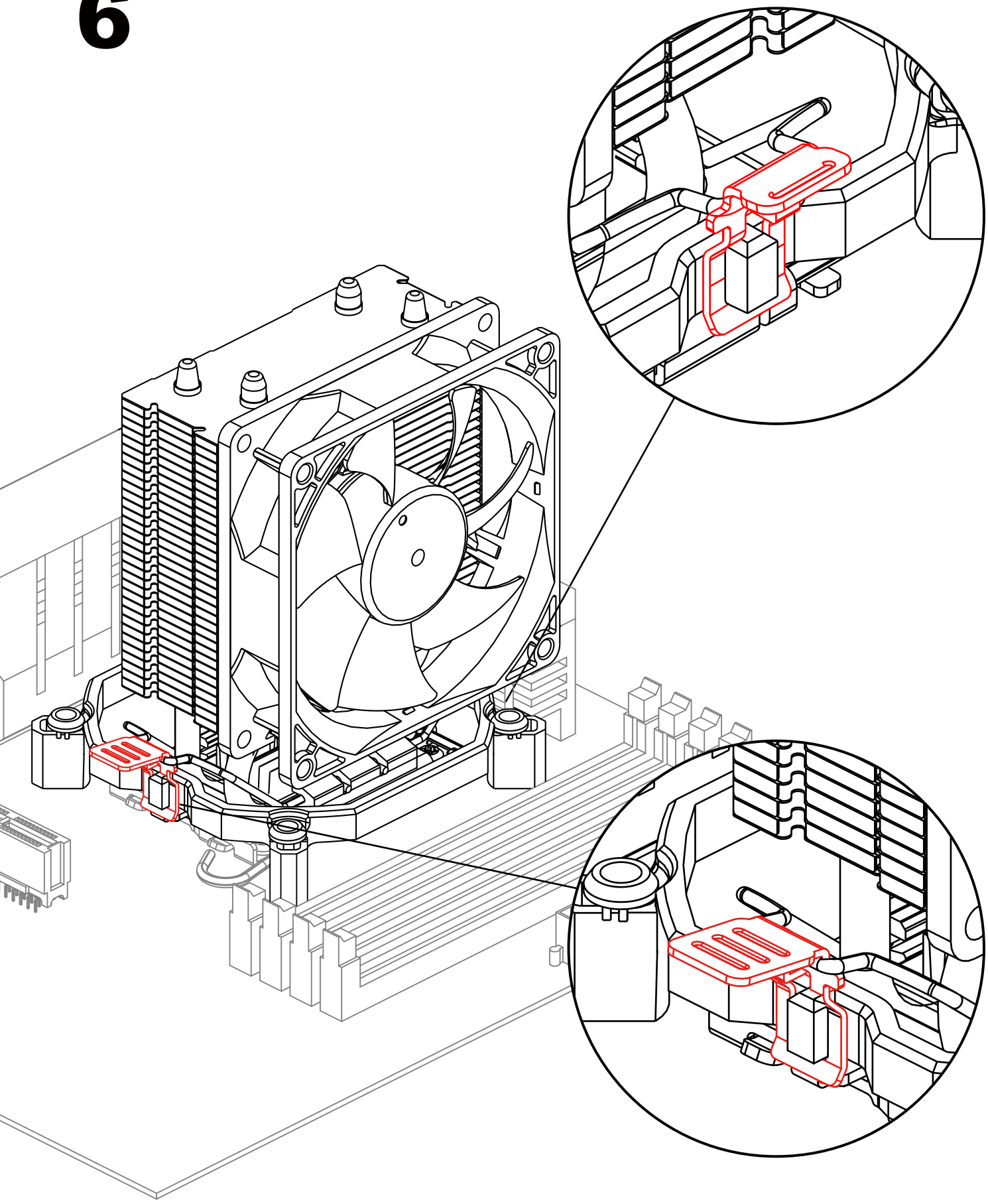

7

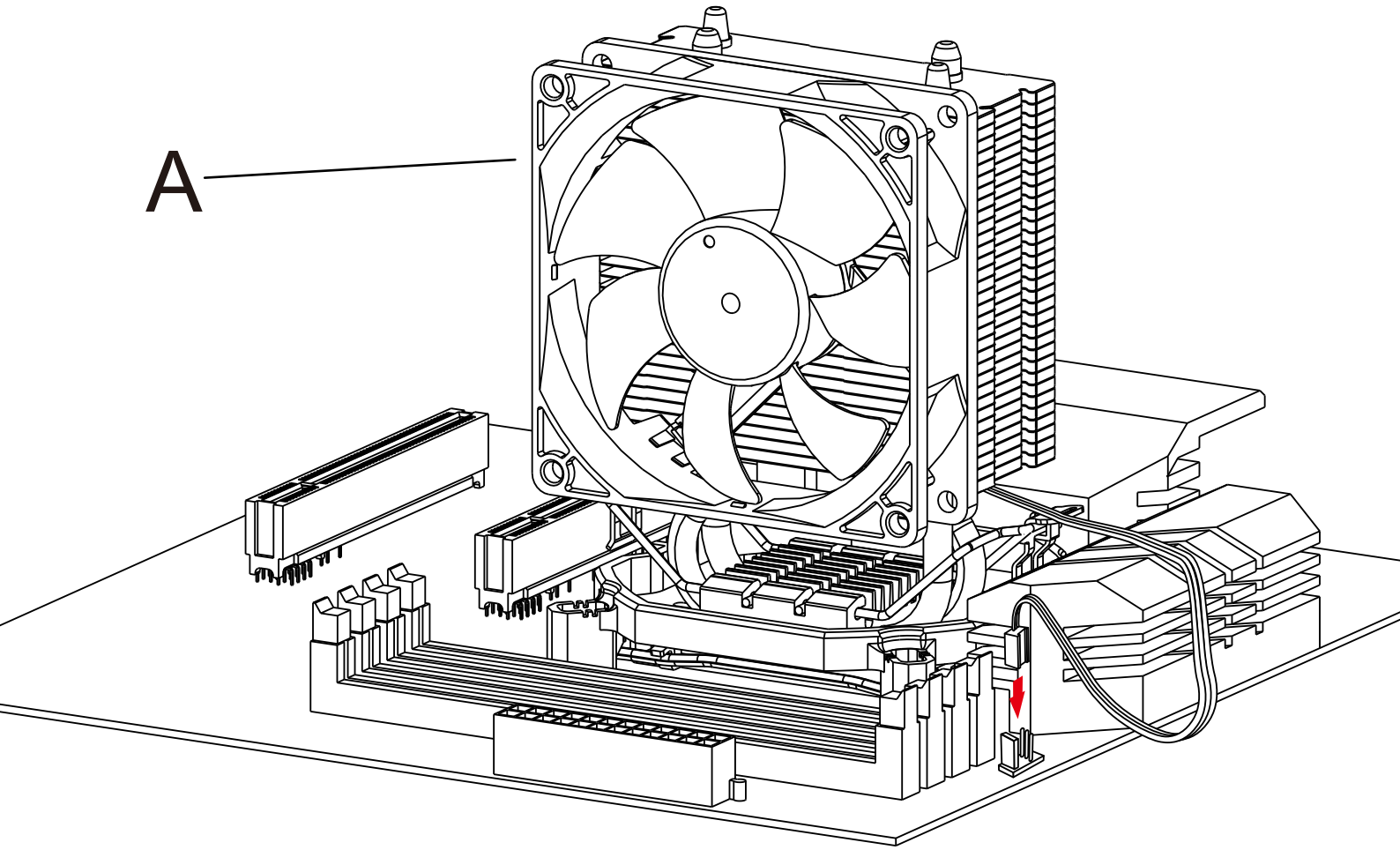

AMD (AM5 / AM4 / AM3+ / AM3 / AM2+ / AM2 / FM2+ / FM2 / FM1)

4

