BOREAS | P2
6 2 D
Gaming CPU Air Cooler

GAMDIAS
GAMING ART IN MOTION

Package contents 01

Intel LGA 1851/ 1700/ 1200/ 115X 03

AMD AM5/ AM4 13

▼Package contents

A

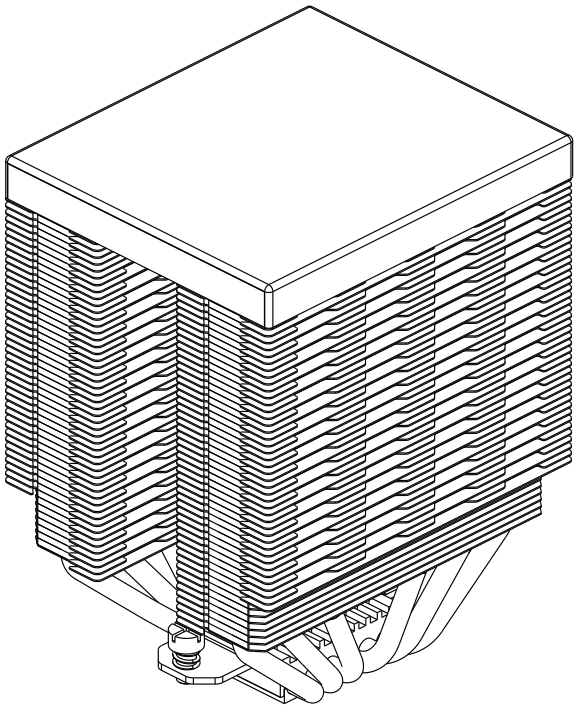

x1

B

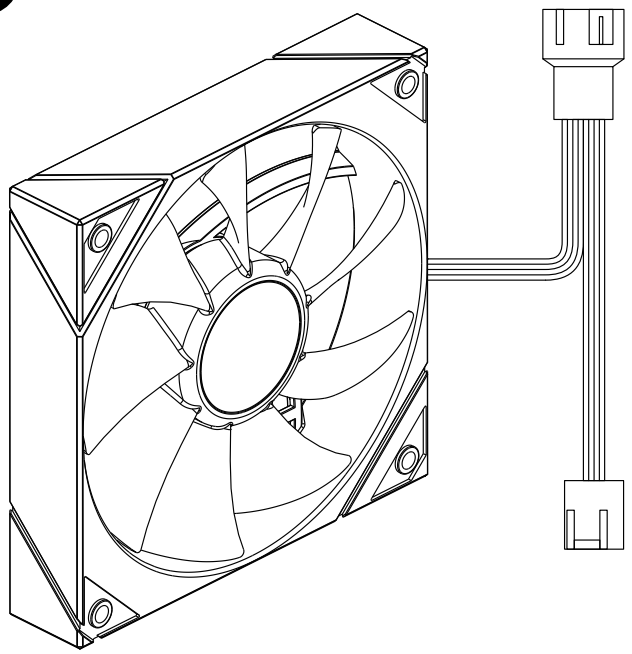

x1

C

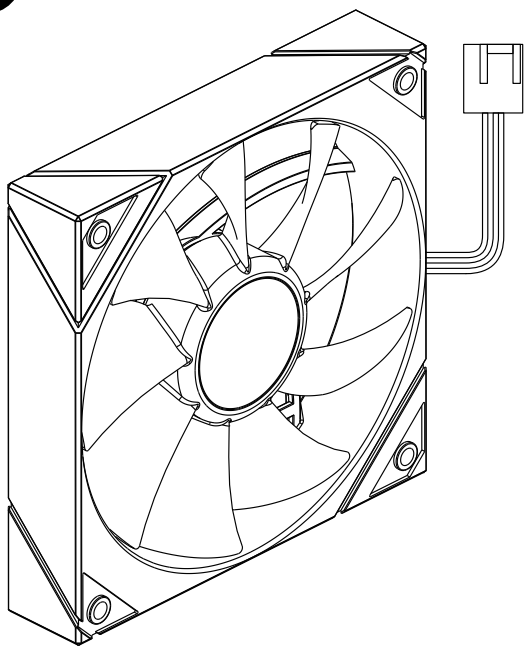

x1

D

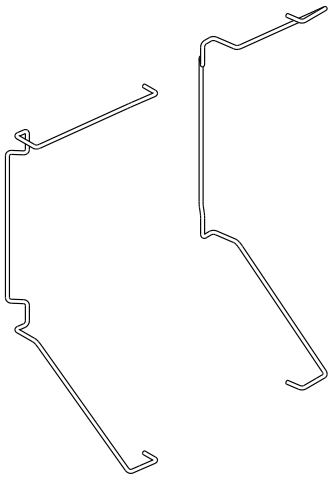

x2

E

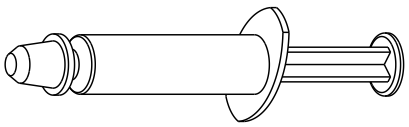

x1

F



x1

▼Package contents

G LGA 1851/ 1700/ 1200 / 115X

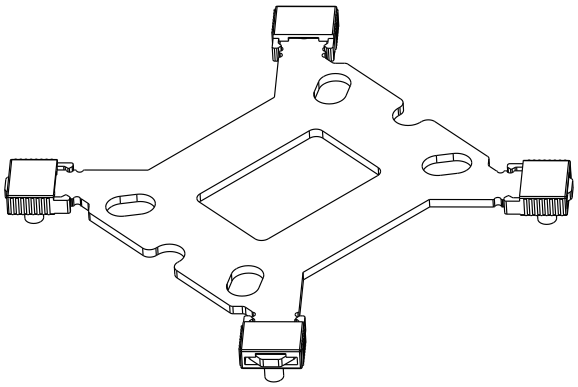

x1

H LGA 1851/ 1700/ 1200 / 115X

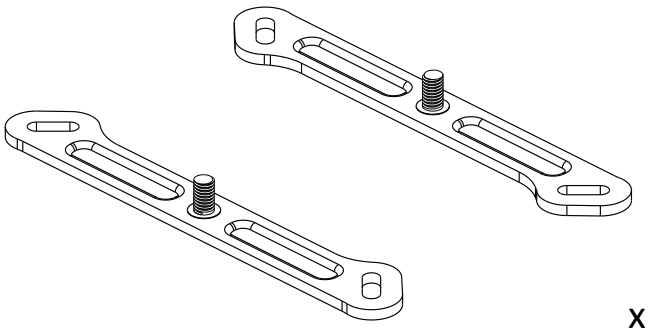

x1

I AM5/ AM4

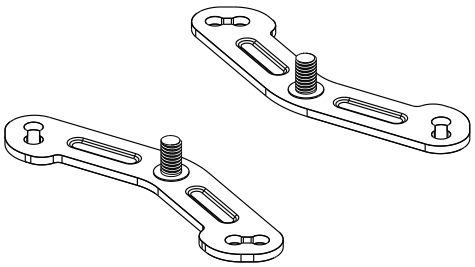

x1

J LGA 1851/ 1700

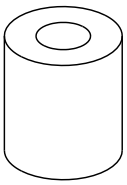

x4

K 115X/ 1200/
AM5/ AM4



x4

L LGA 1851/ 1700/ 1200/ 115X

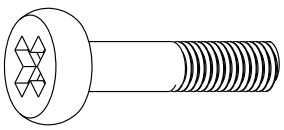

x4

M AM5/ AM4

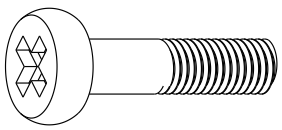

x4

Intel LGA1851 / 1700 / 1200 / 115X

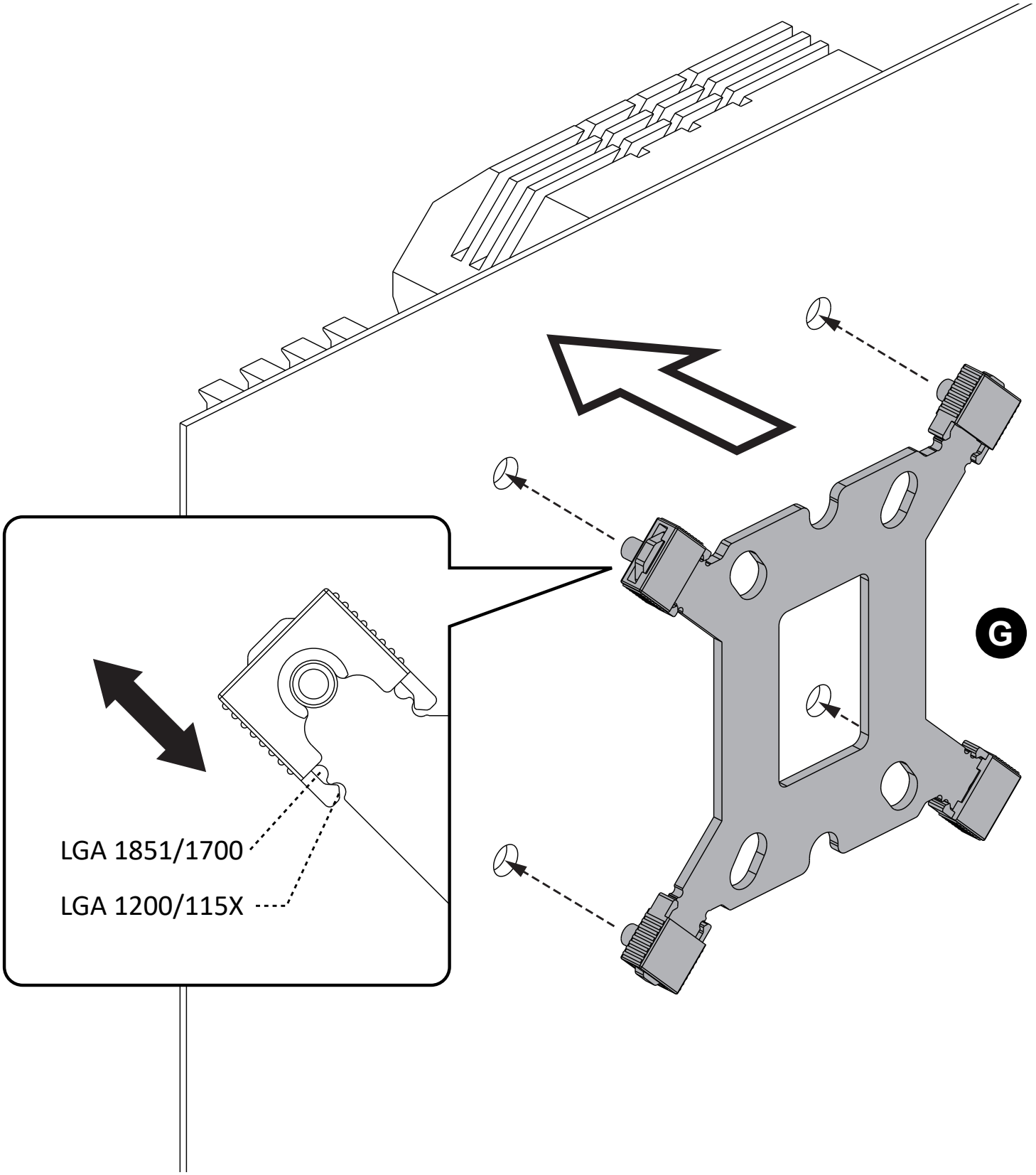

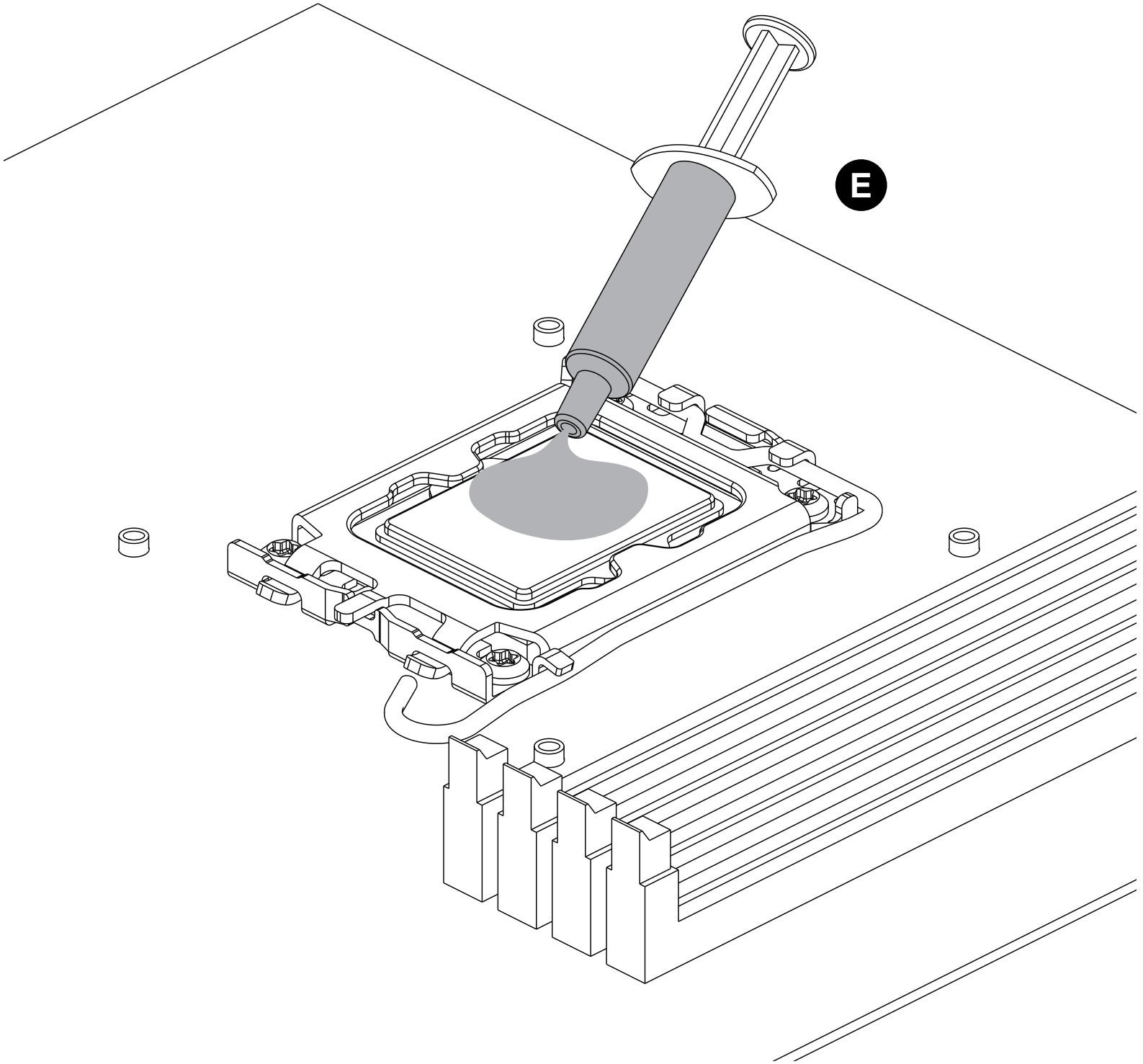
E

▼Intel LGA1851 / 1700 / 1200 / 115X

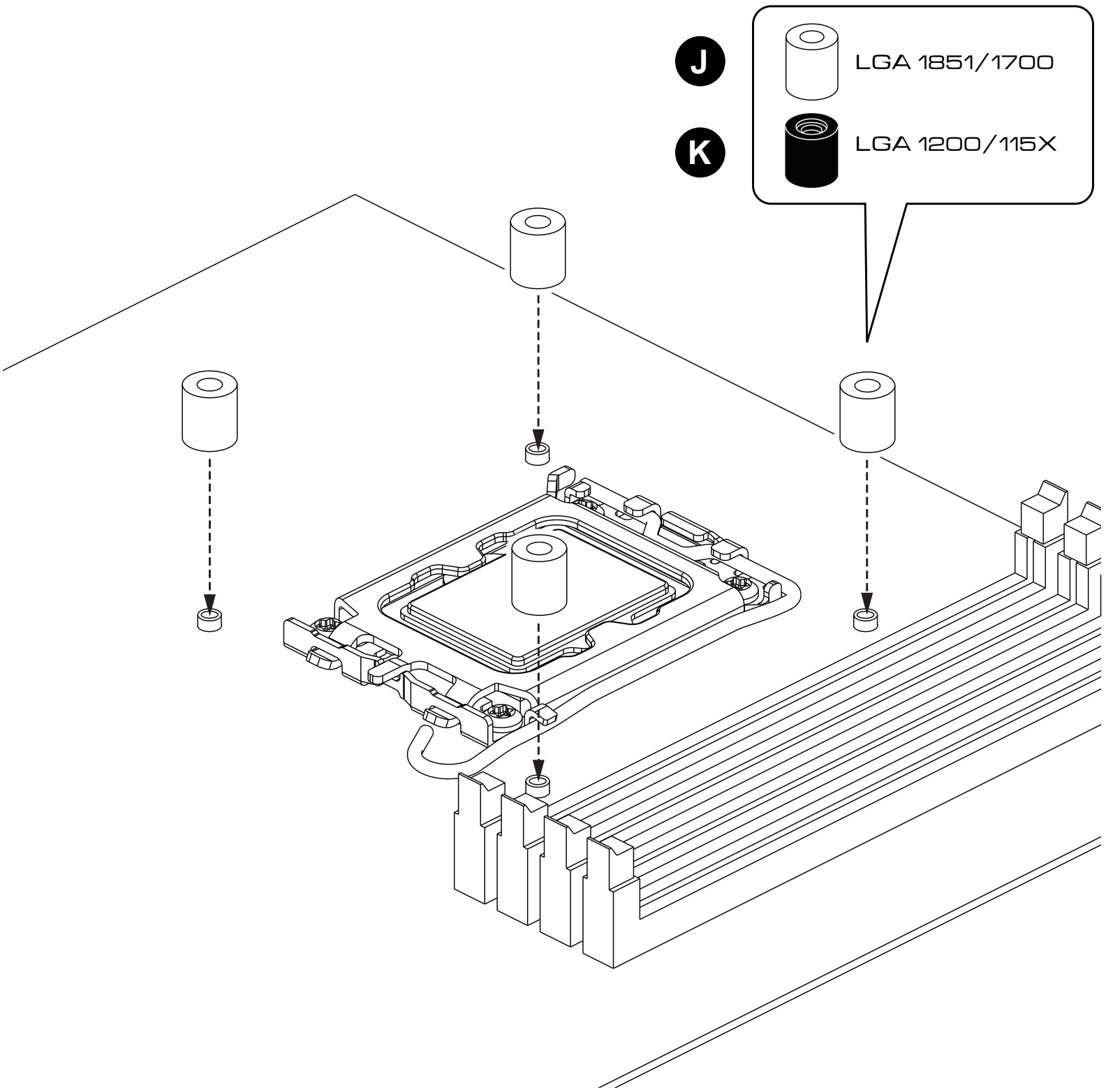

▼Intel LGA1851 / 1700 / 1200 / 115X

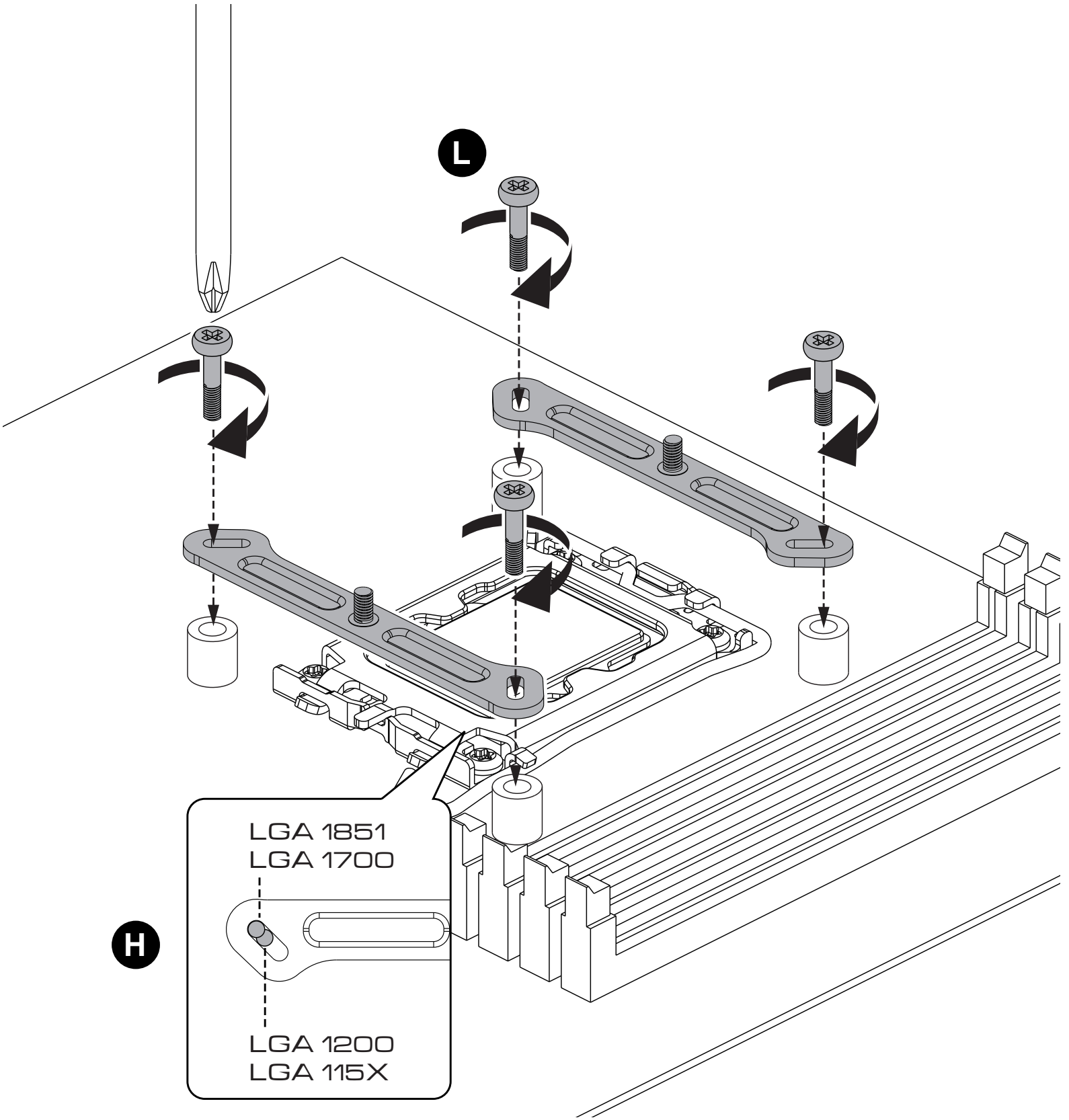

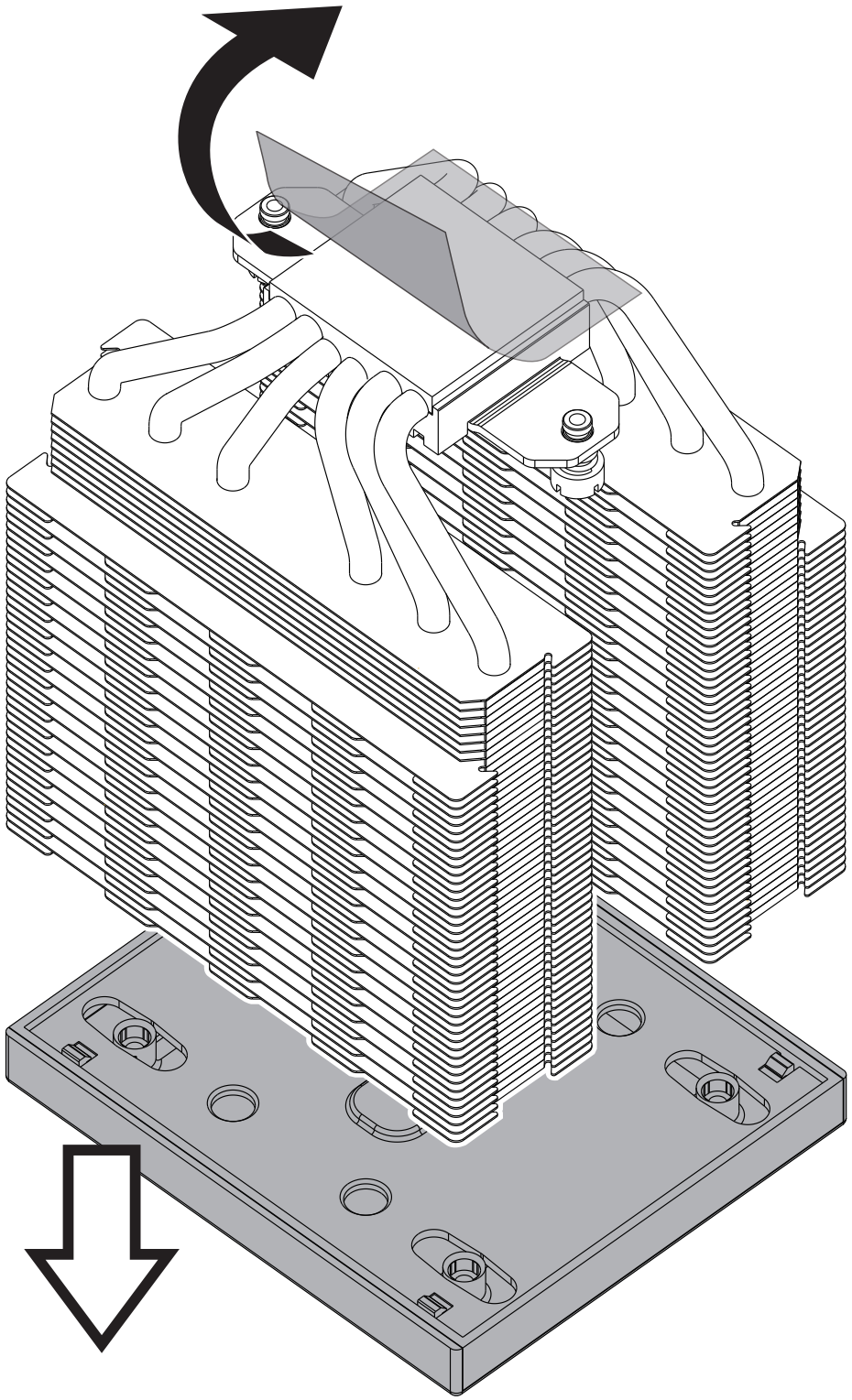
A

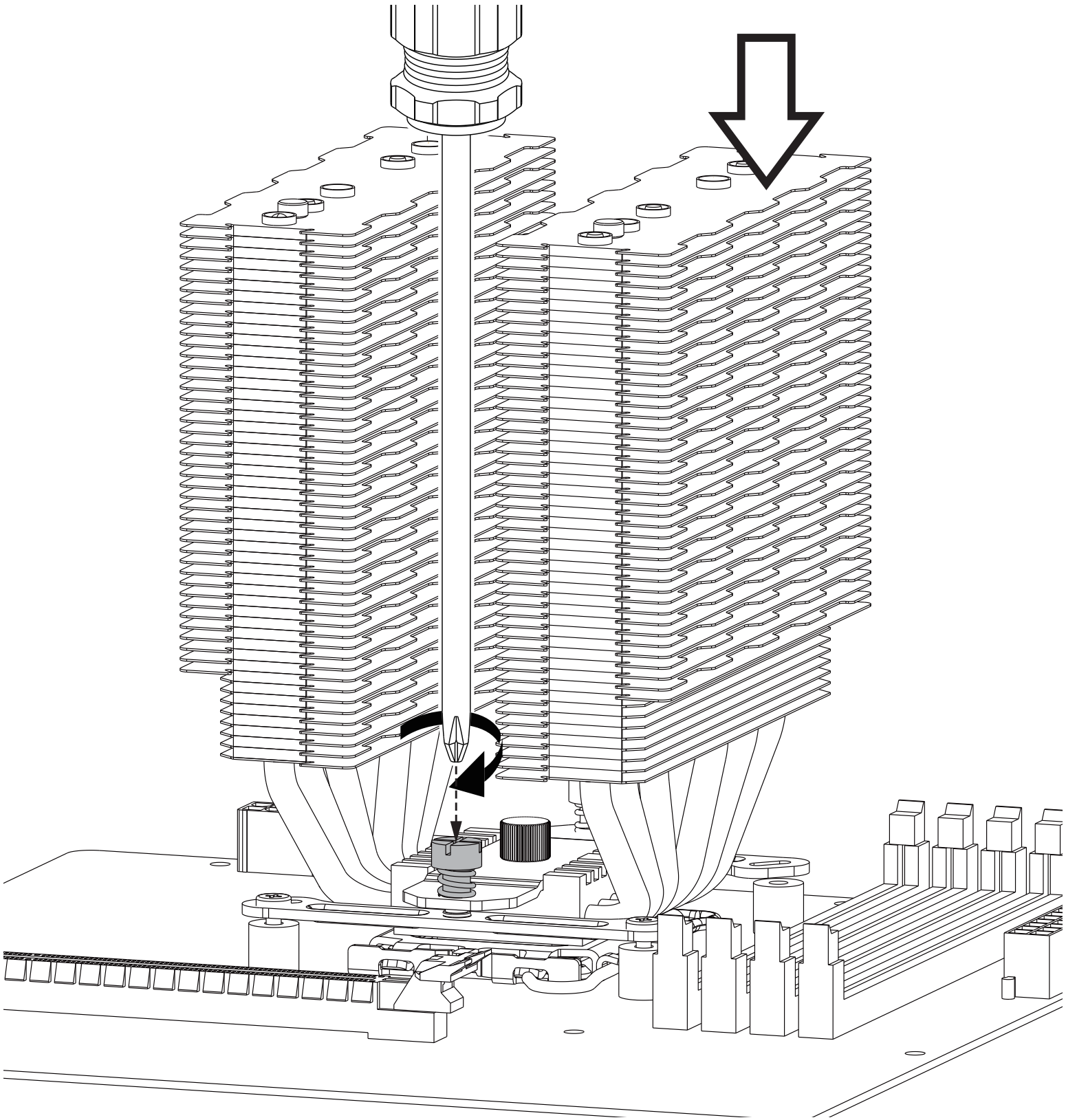

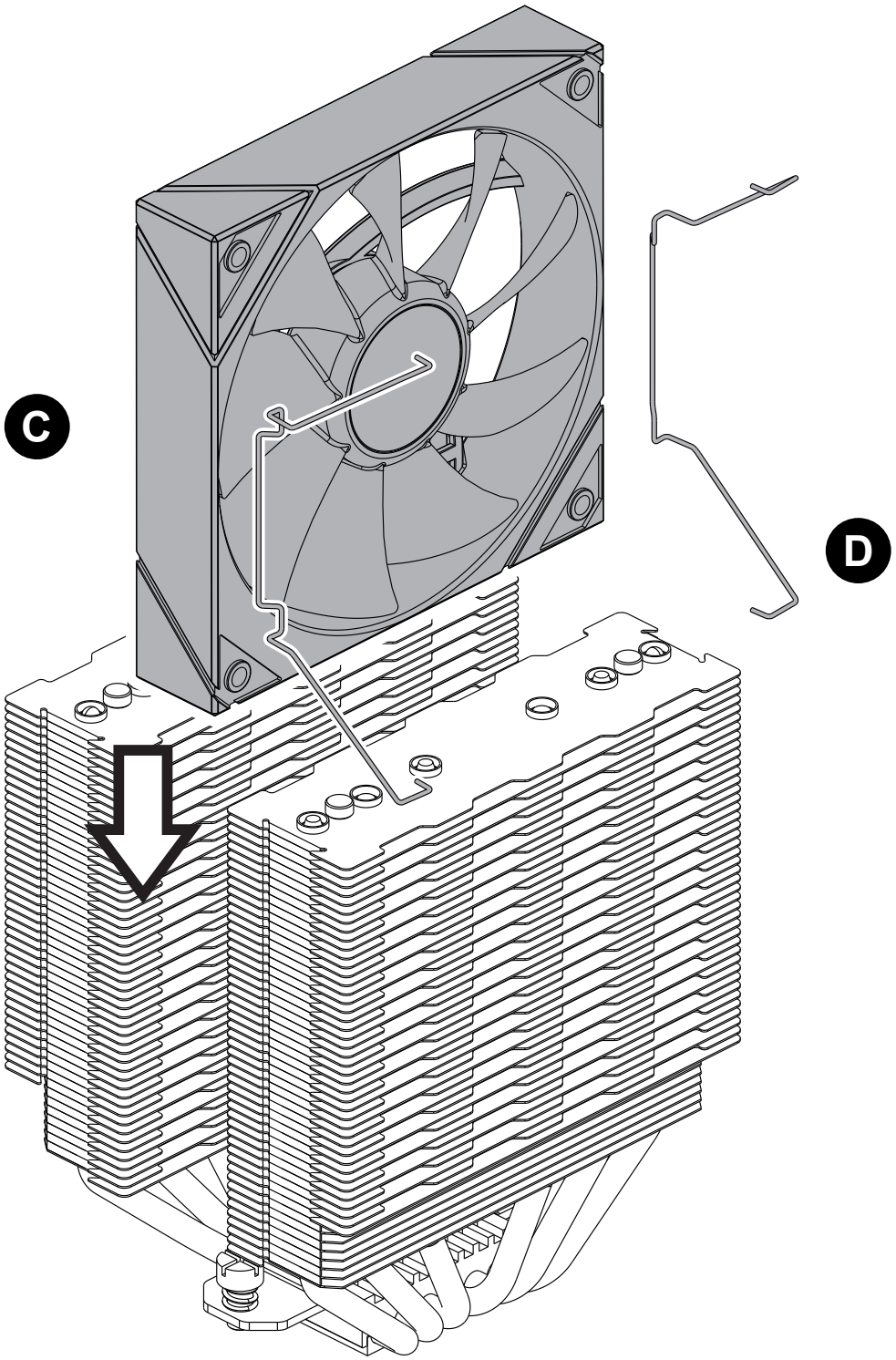
C
D

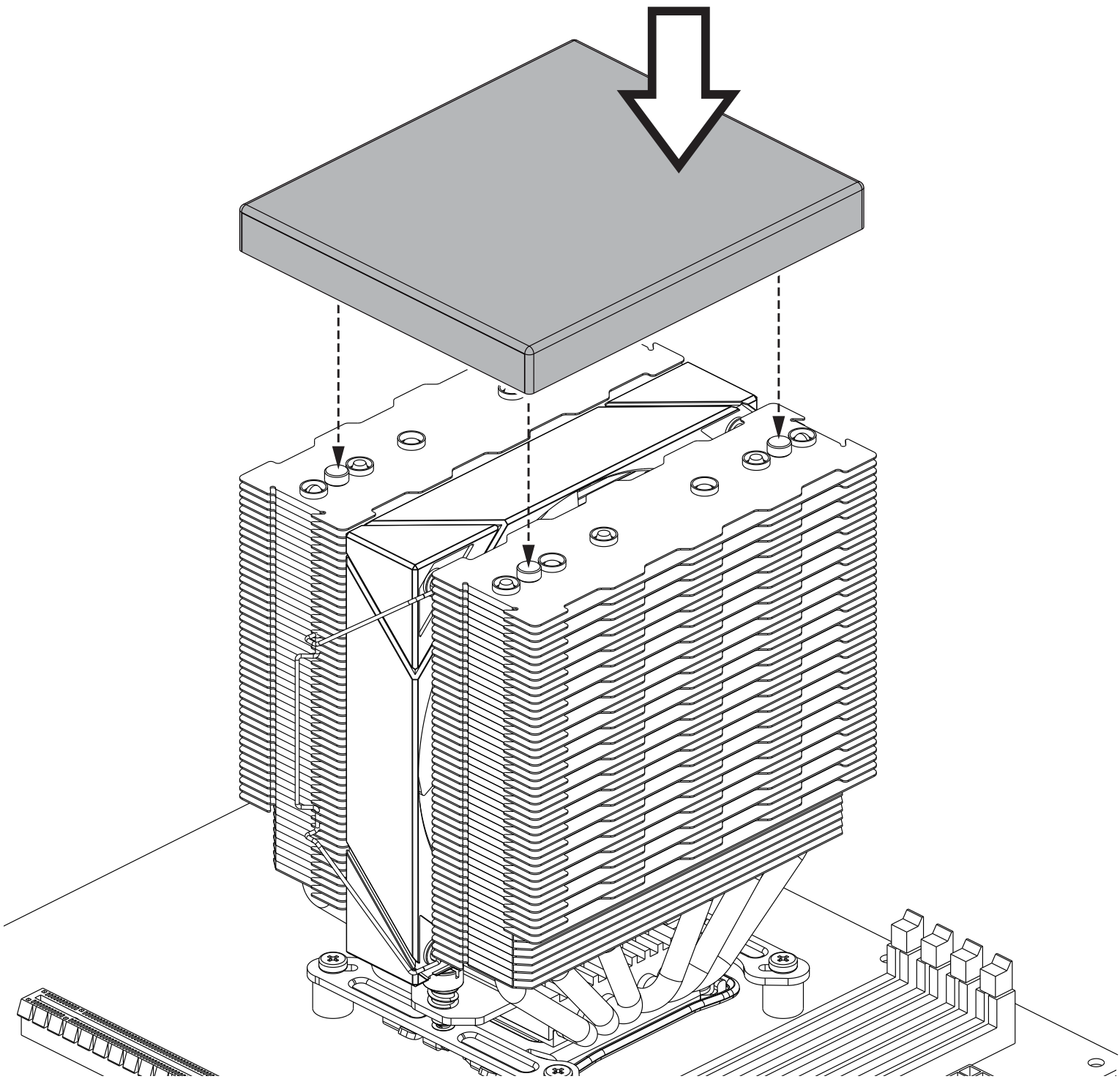

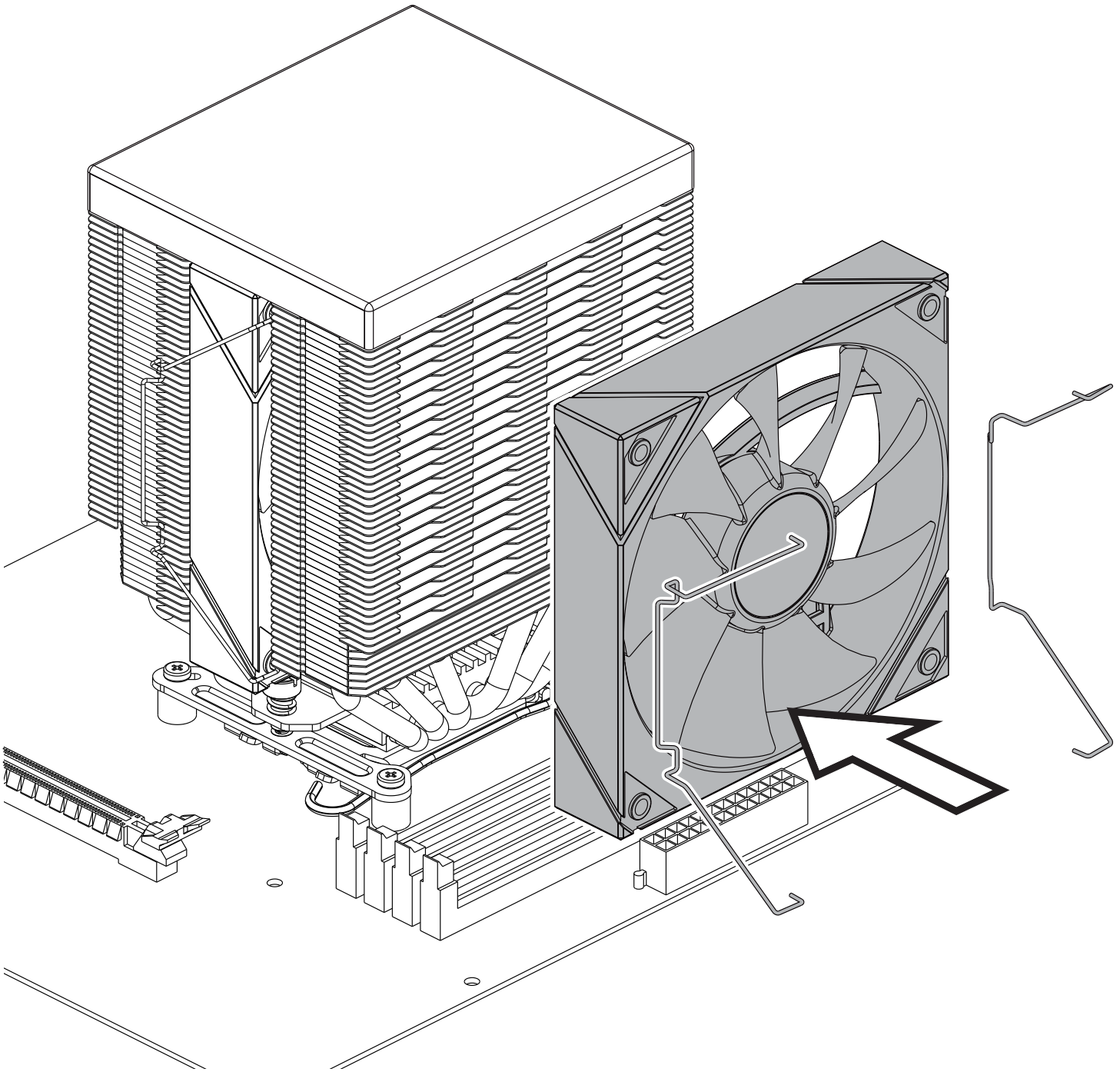

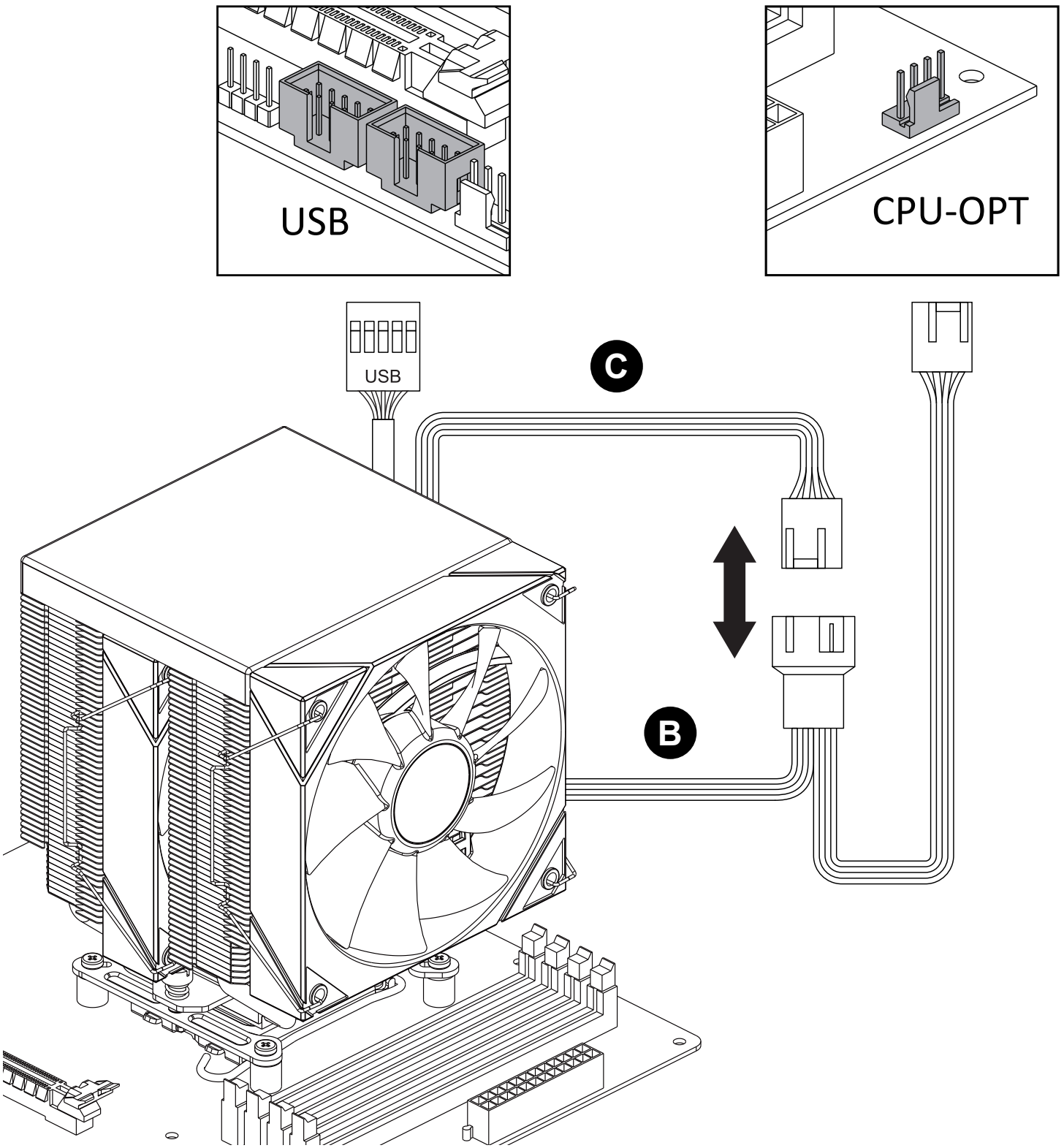
USB
CPU-OPT
USB
C
B

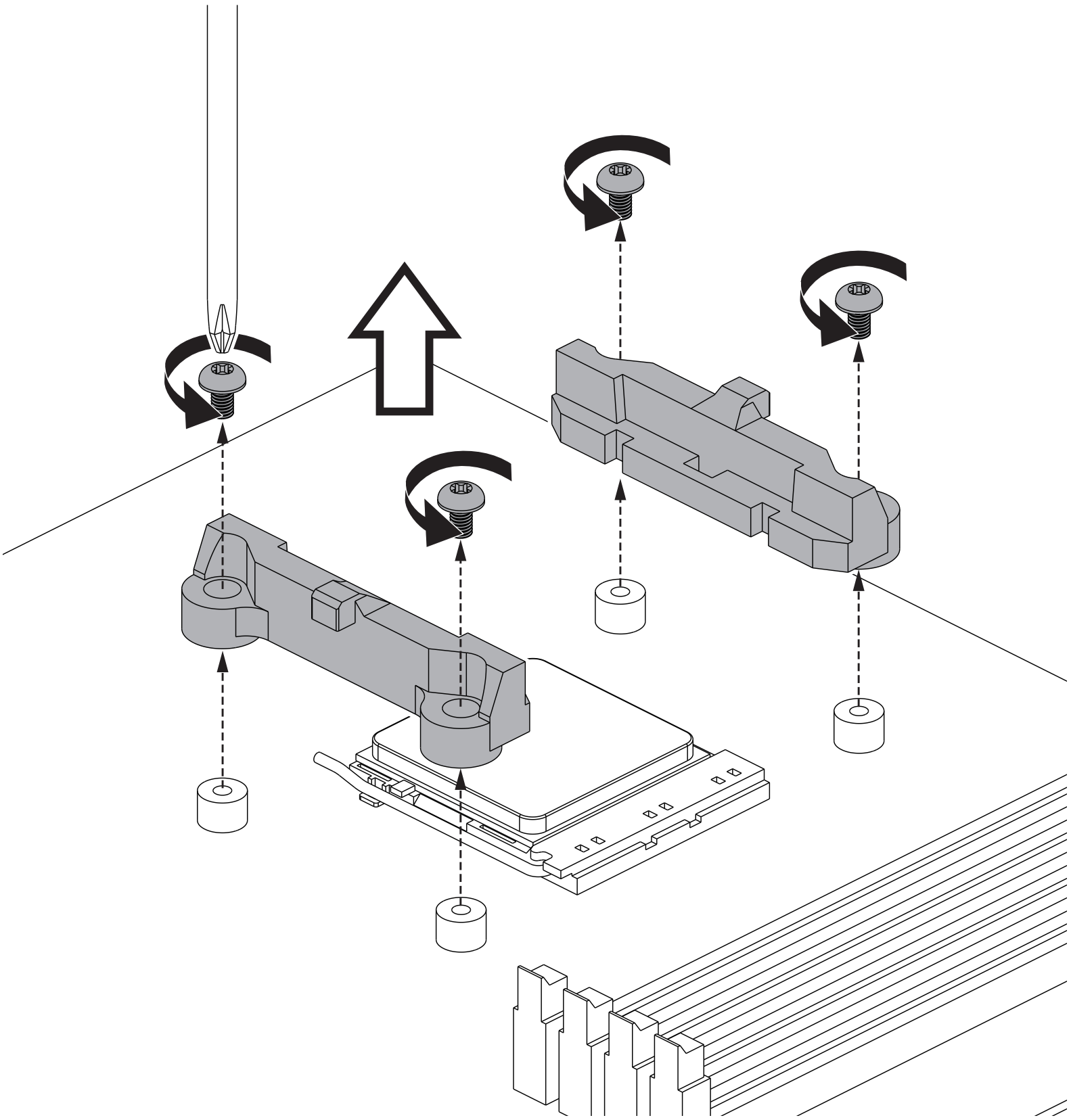

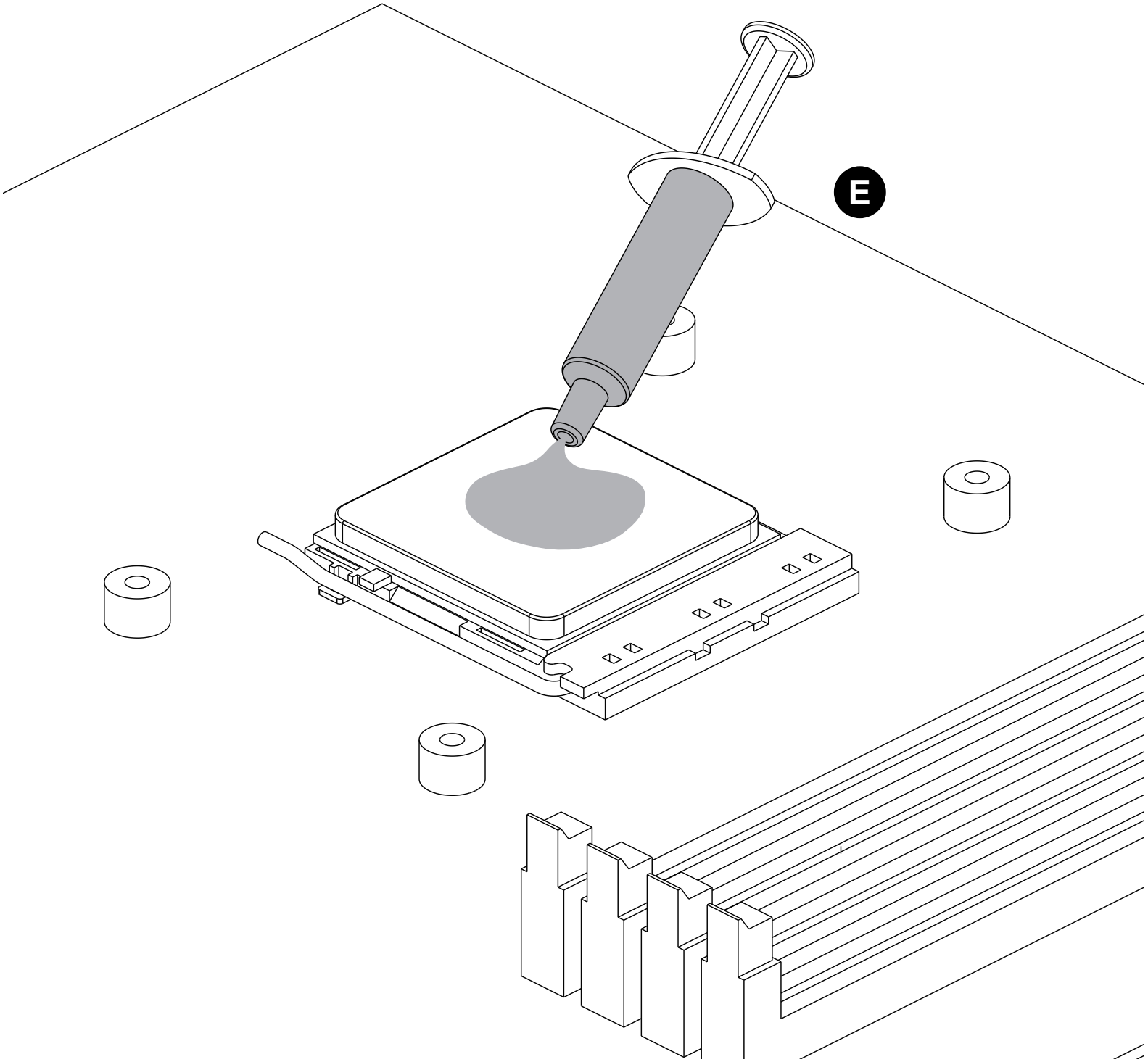
E

▼AMD AM5/ AM4

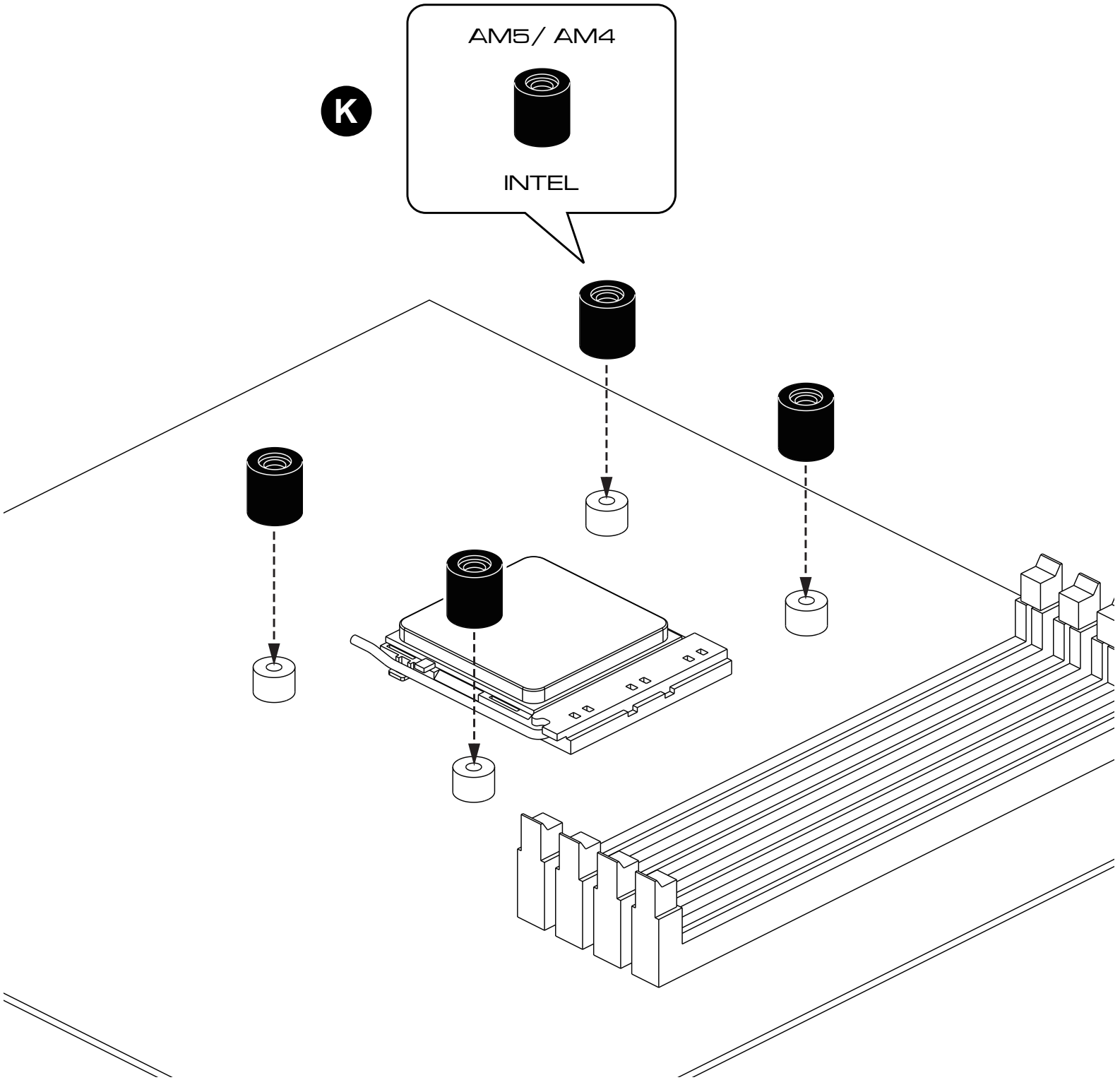

▼AMD AM5/ AM4

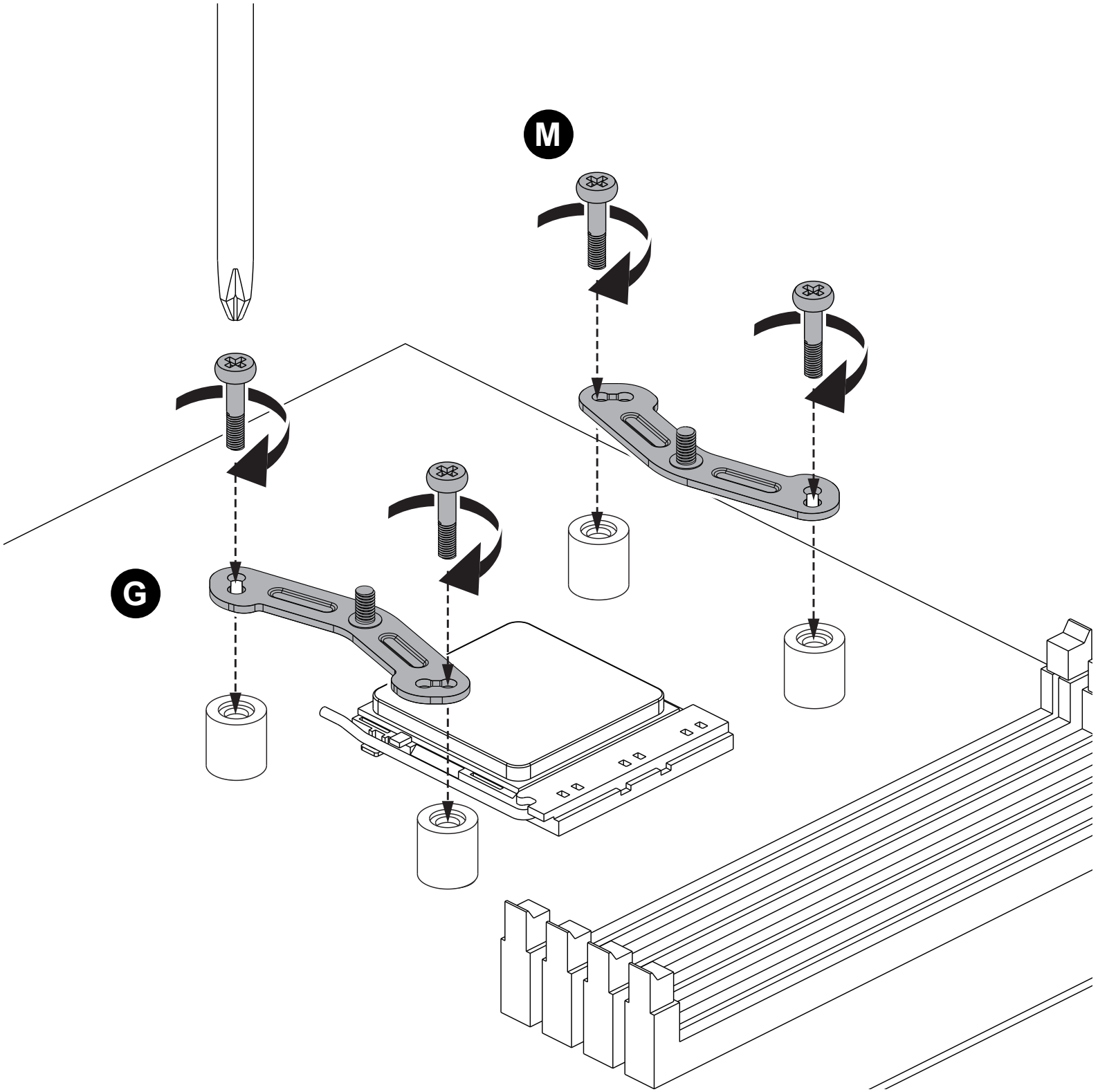

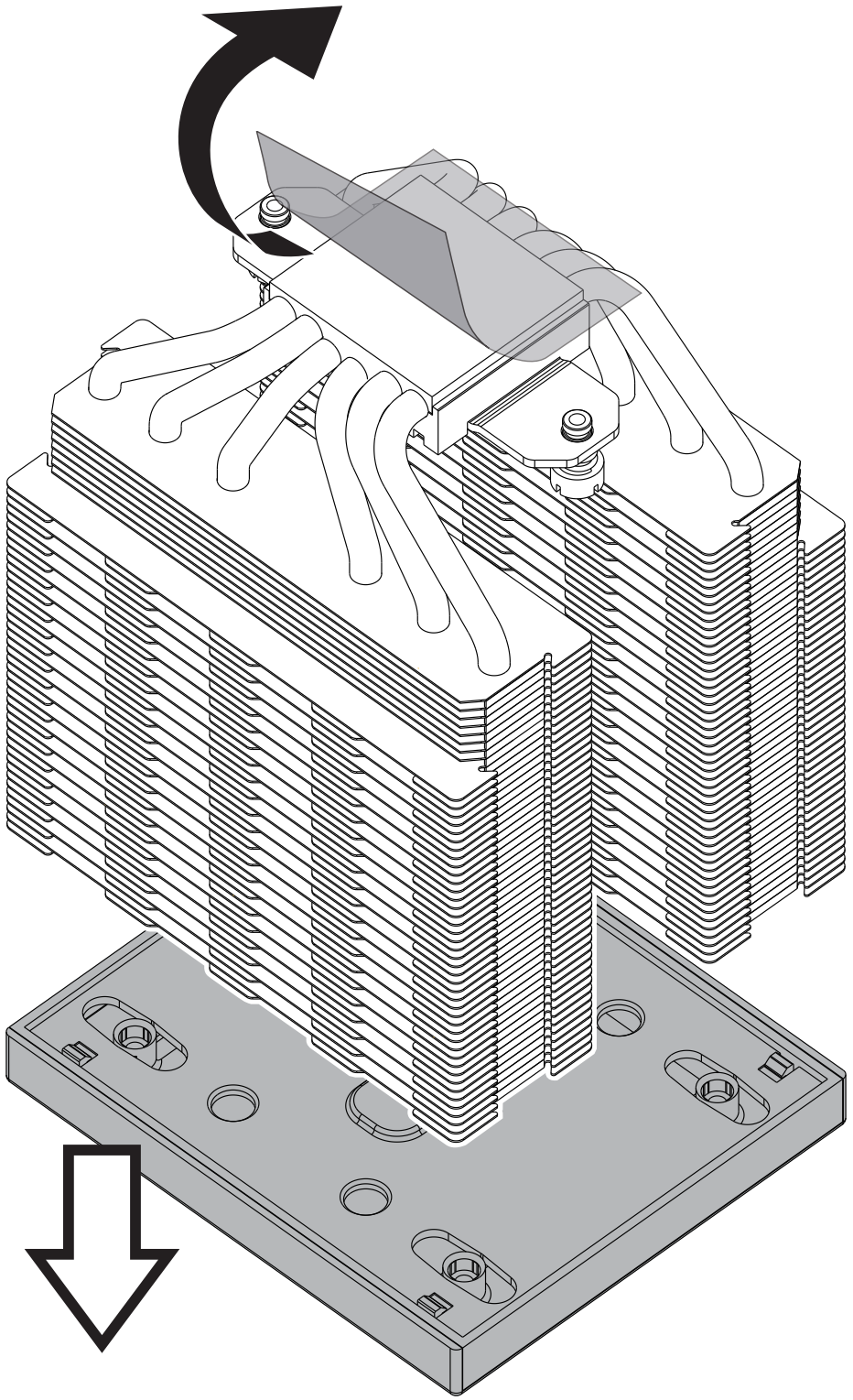
A

▼AMD AM5/ AM4

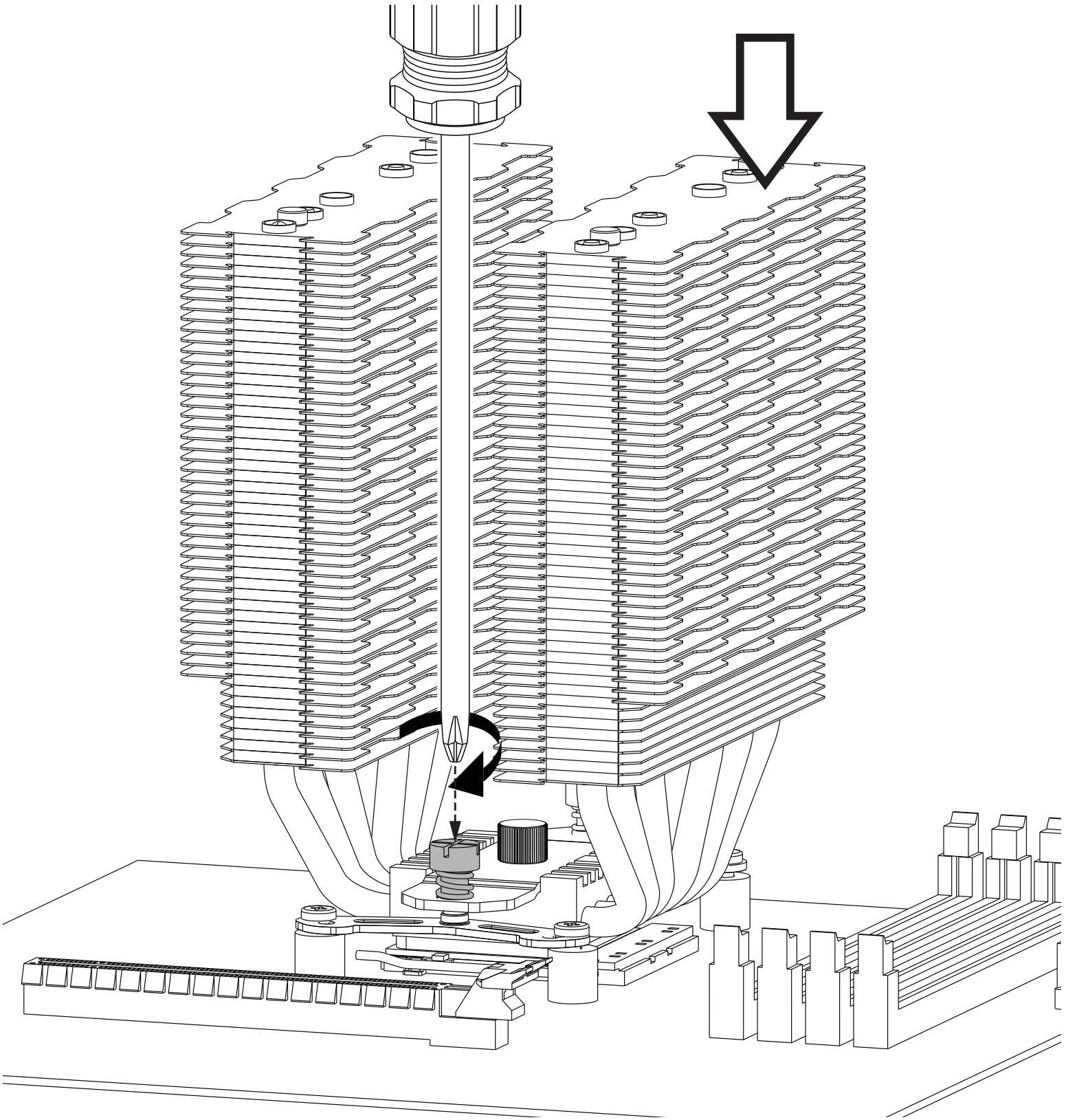

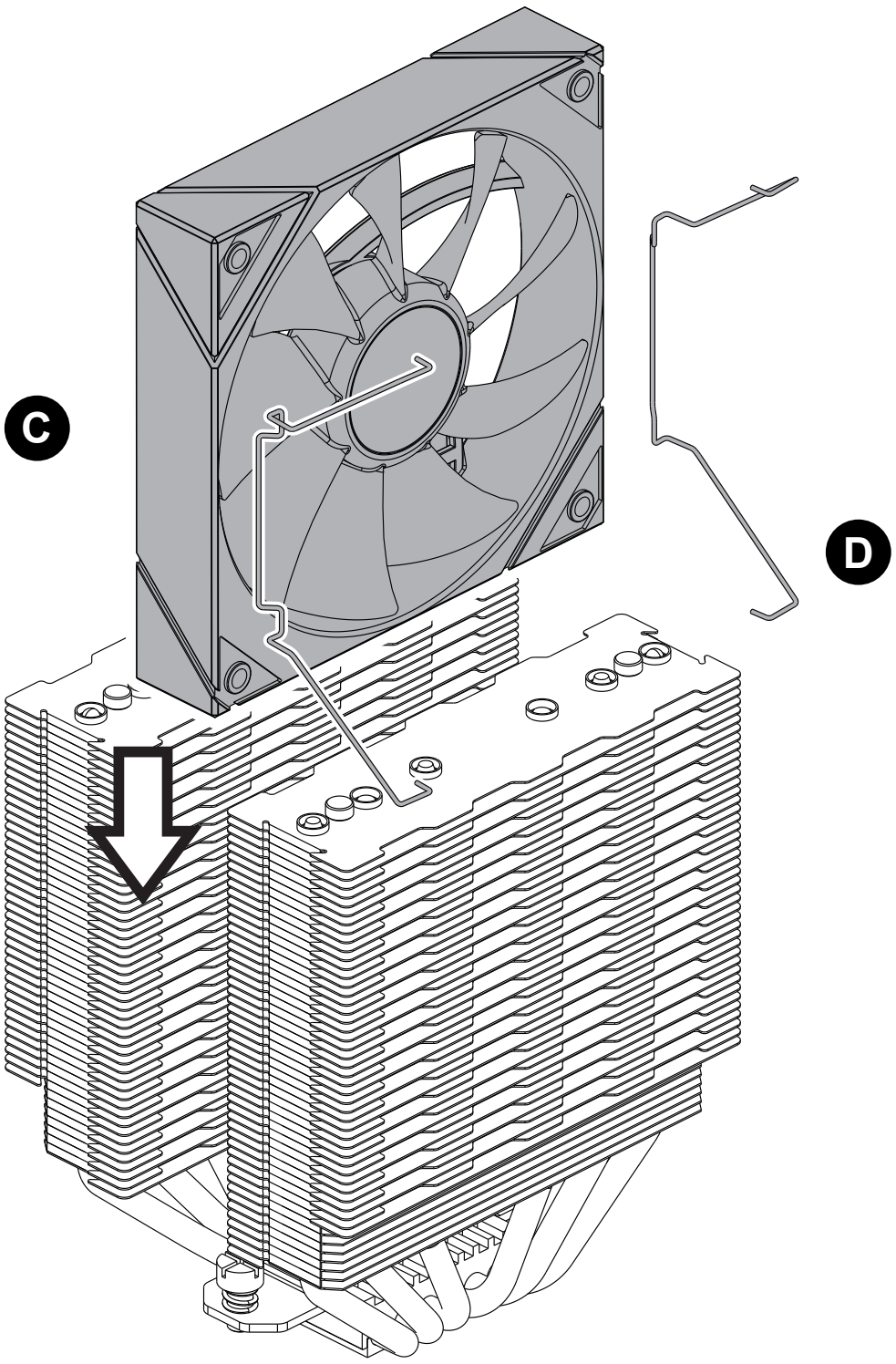
C
D

▼AMD AM5/ AM4

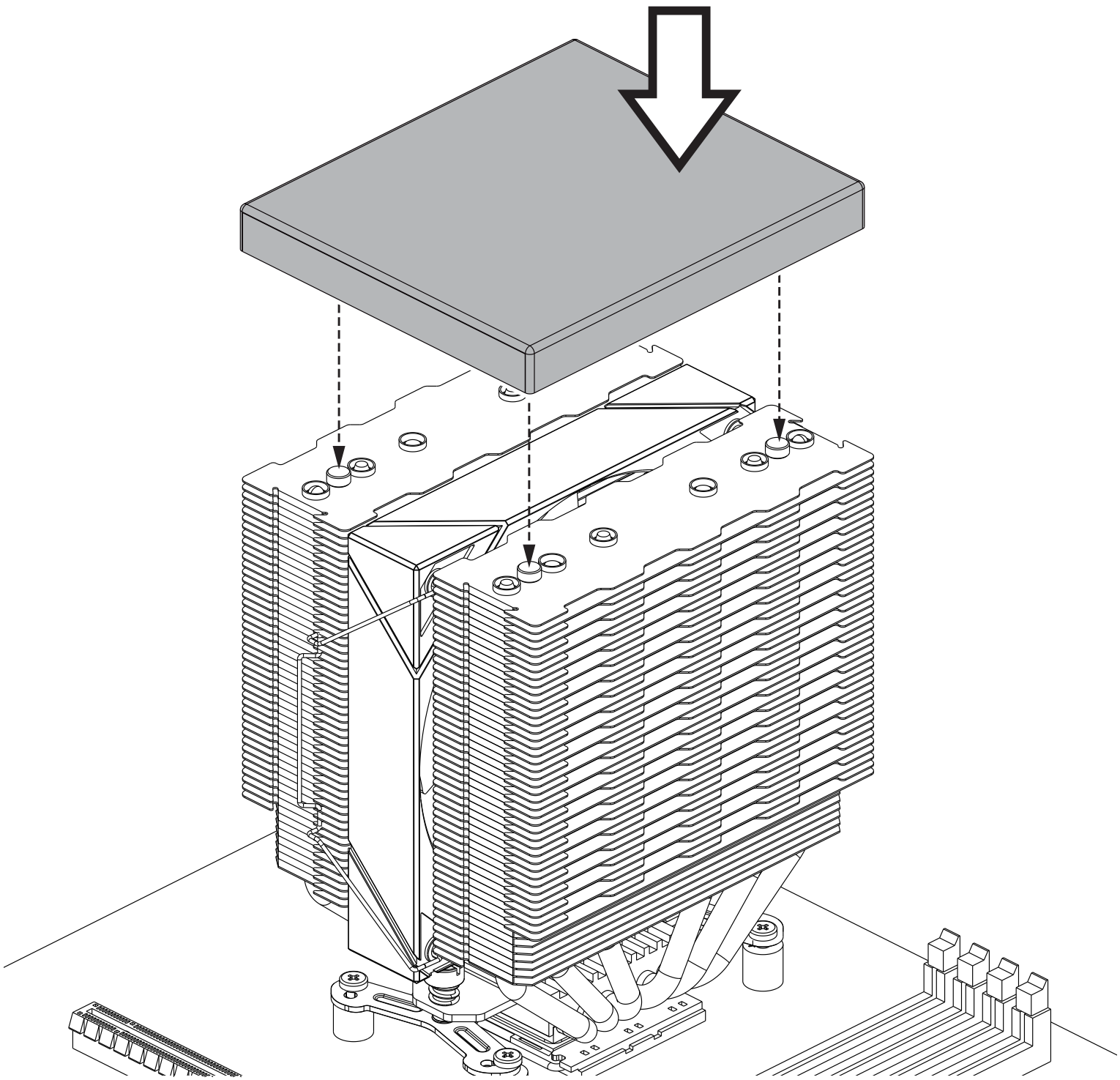

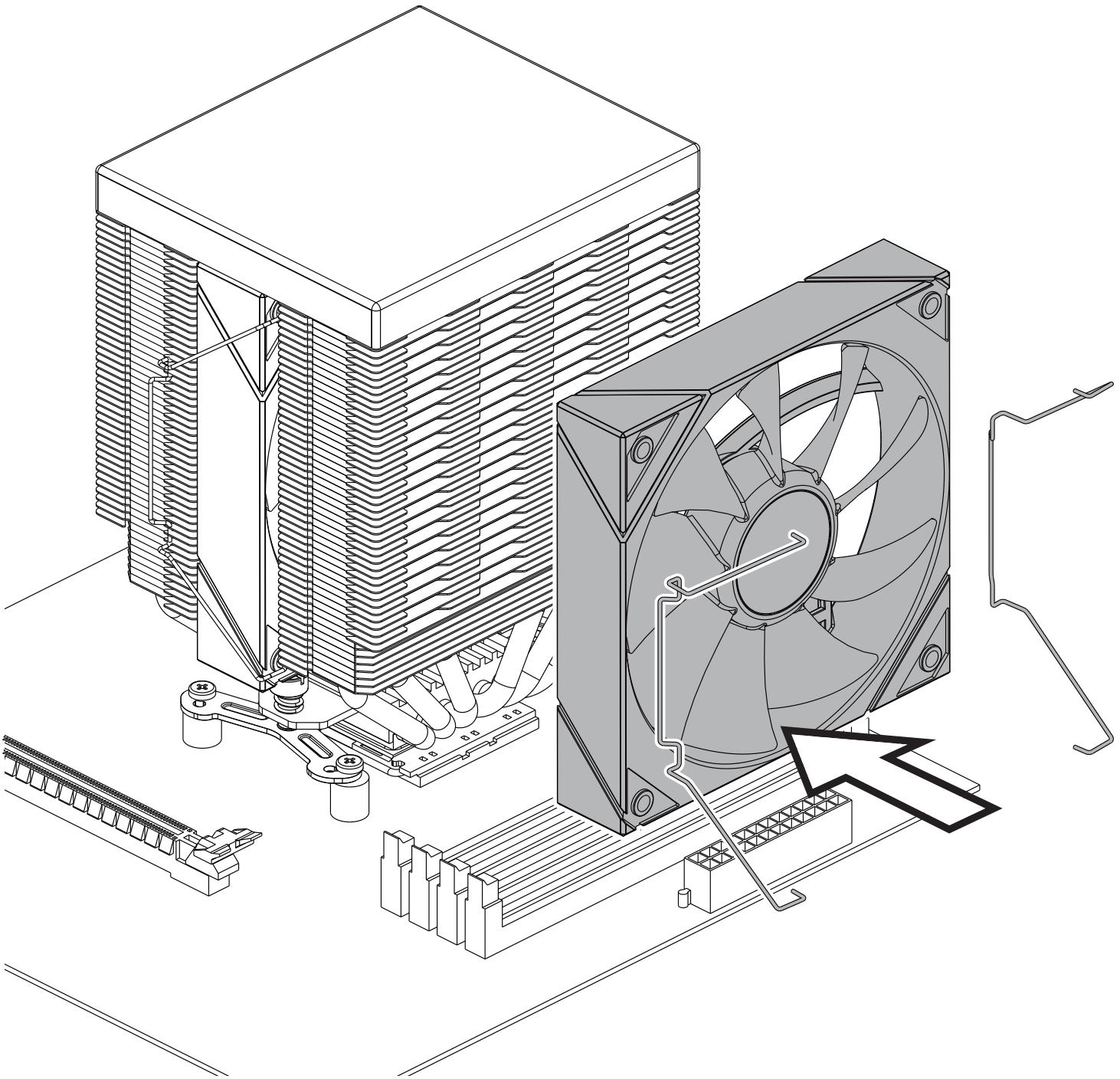

▼AMD AM5/ AM4

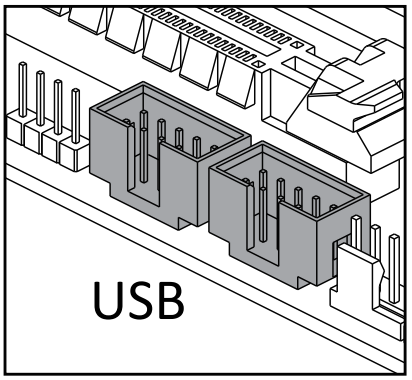

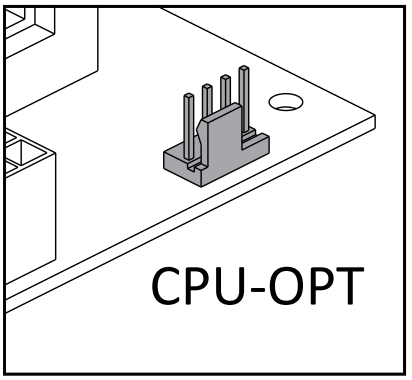

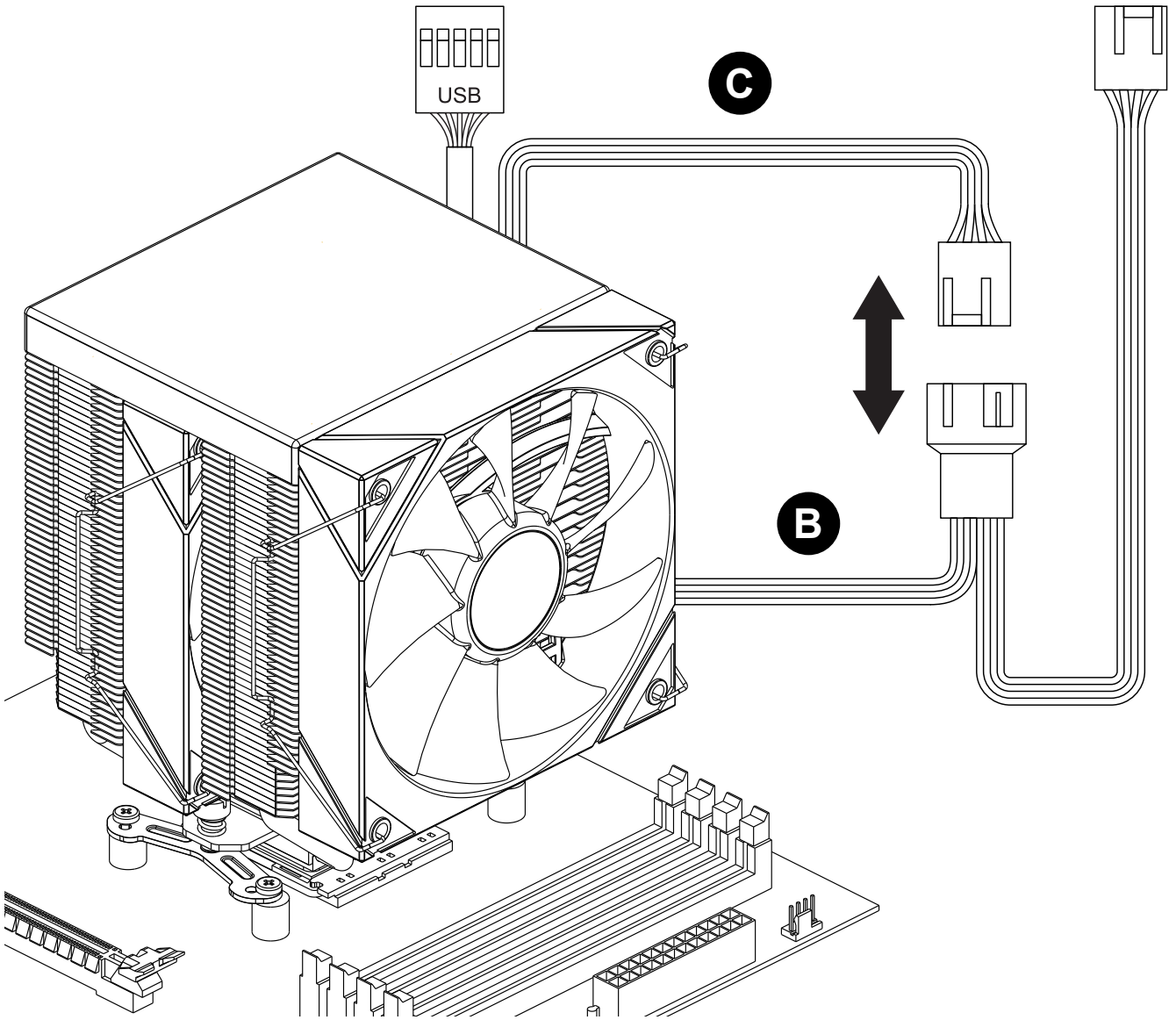

HTTPS://WWW.GAMDIAS.COM/