SAMA

www.samagears.com

A SERIES

High Performance AIR Cooler

A40L

USER GUIDE

01 Buckle and accessories

A

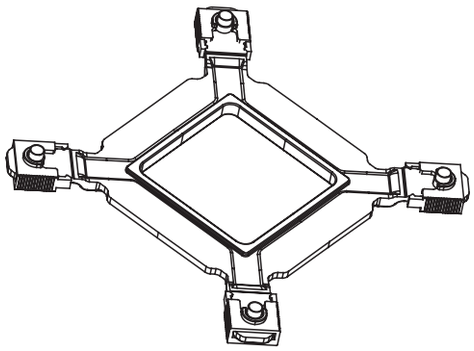

B



C

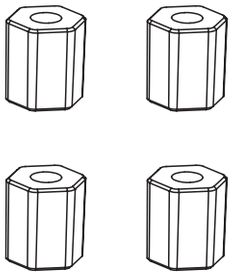

D

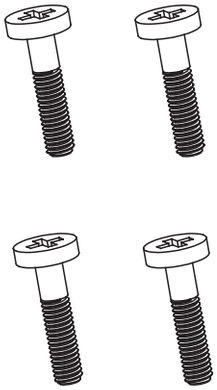

E

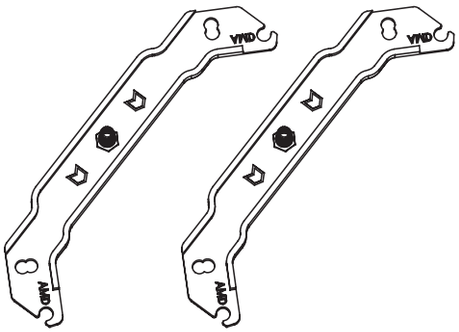

INTEL: A C D E

AMD: C D E

02 INTEL-LGA 1851/1700/1200/115X

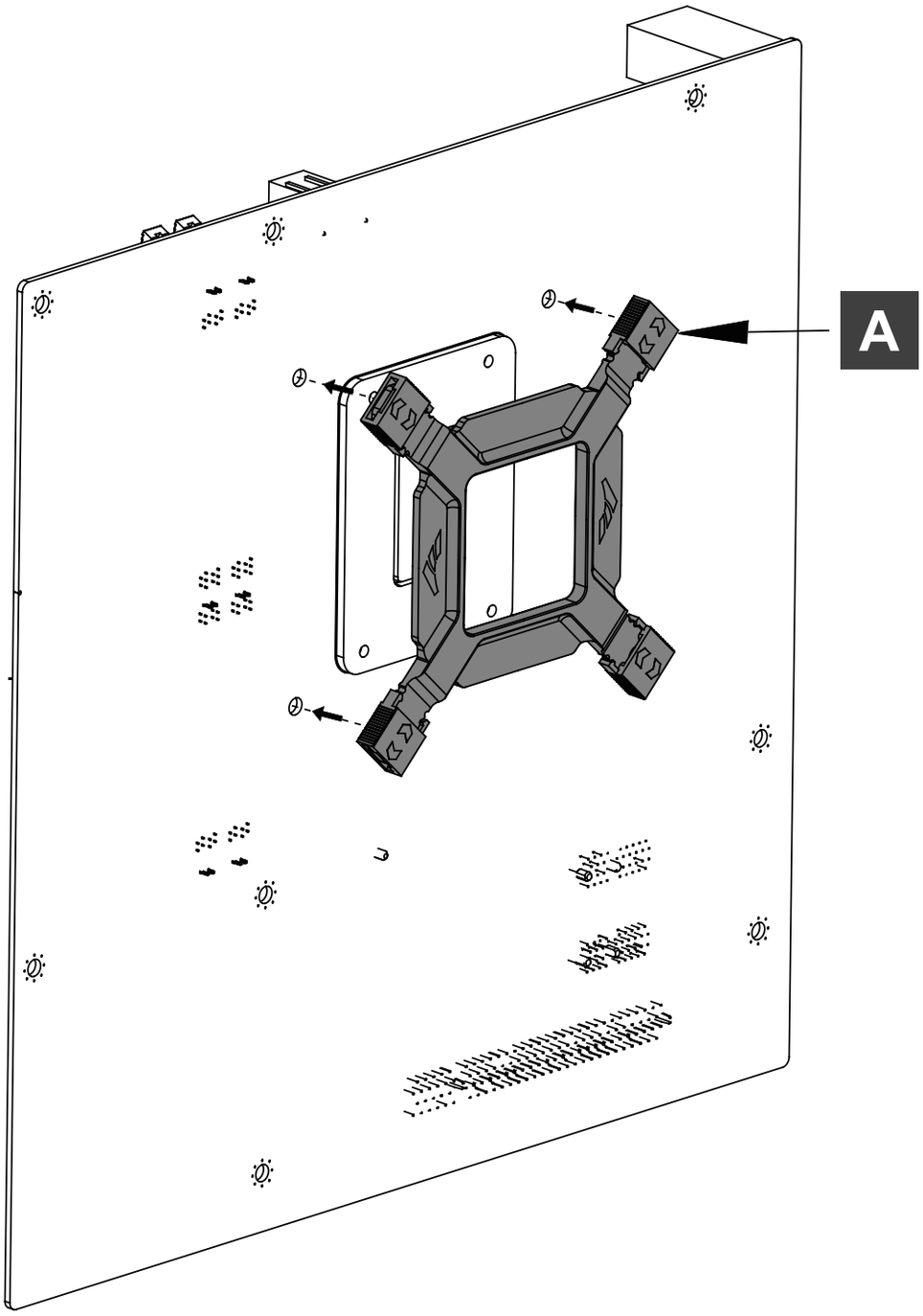

A

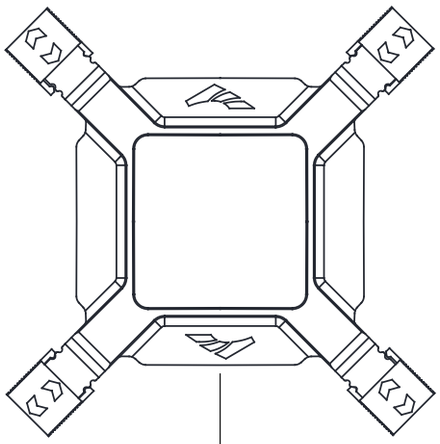

LGA1851/1700

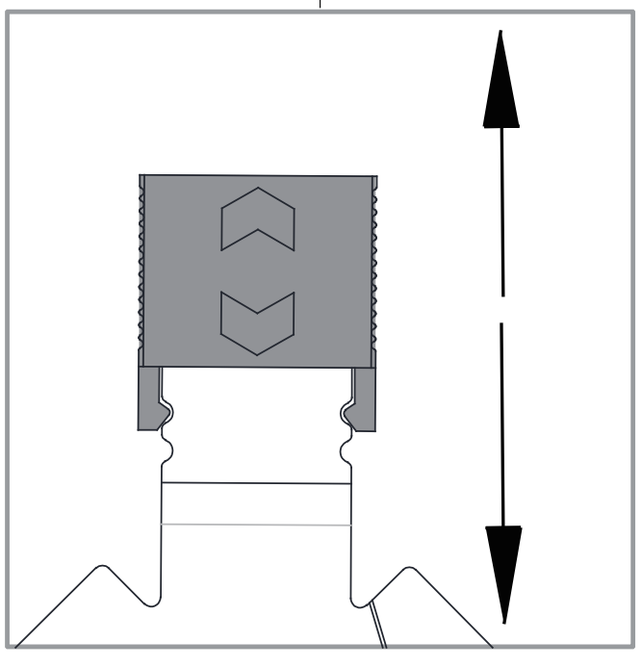

LGA115X/1200

03 INTEL-LGA 1851/1700/1200/115X

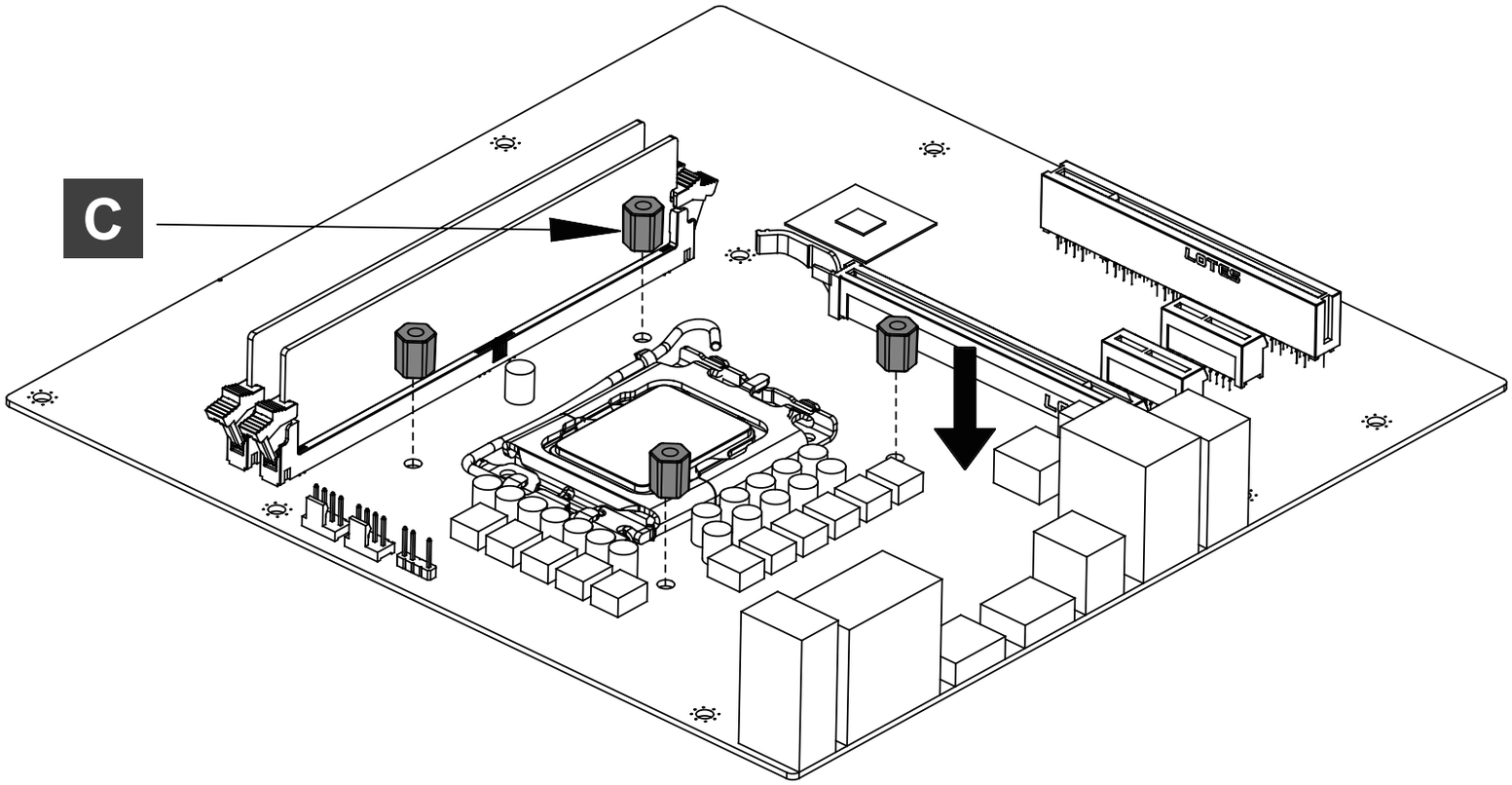

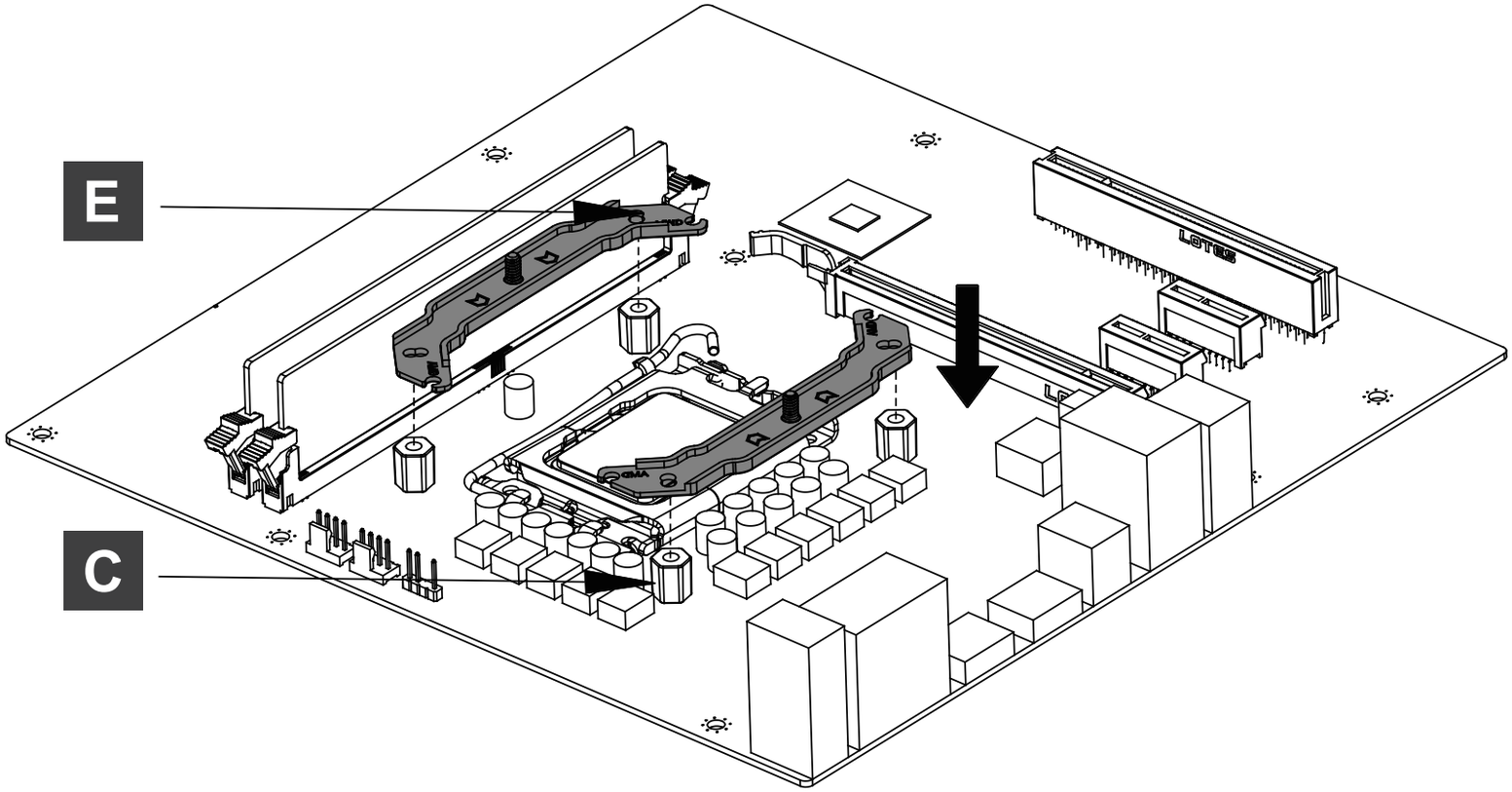

04 INTEL-LGA 1851/1700/1200/115X

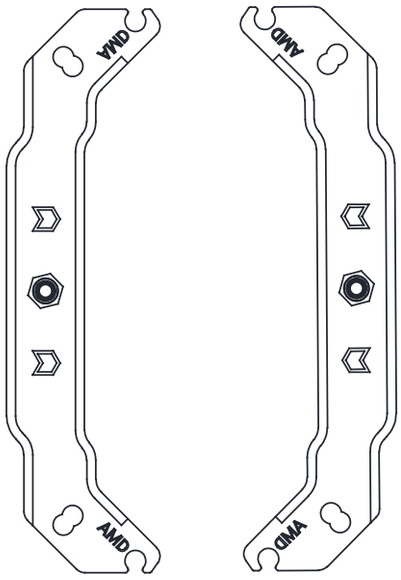

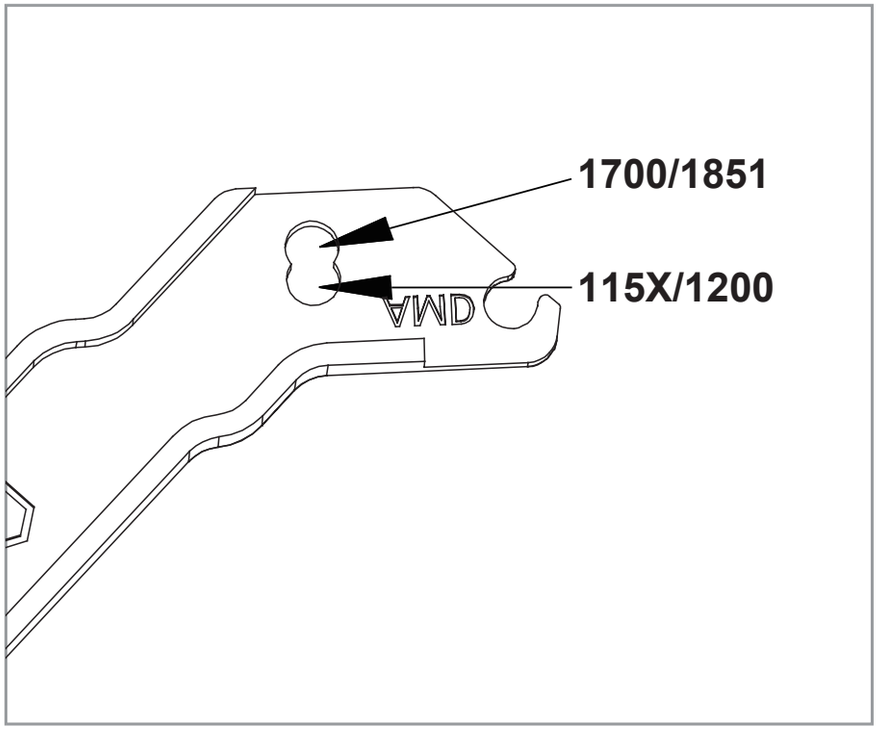

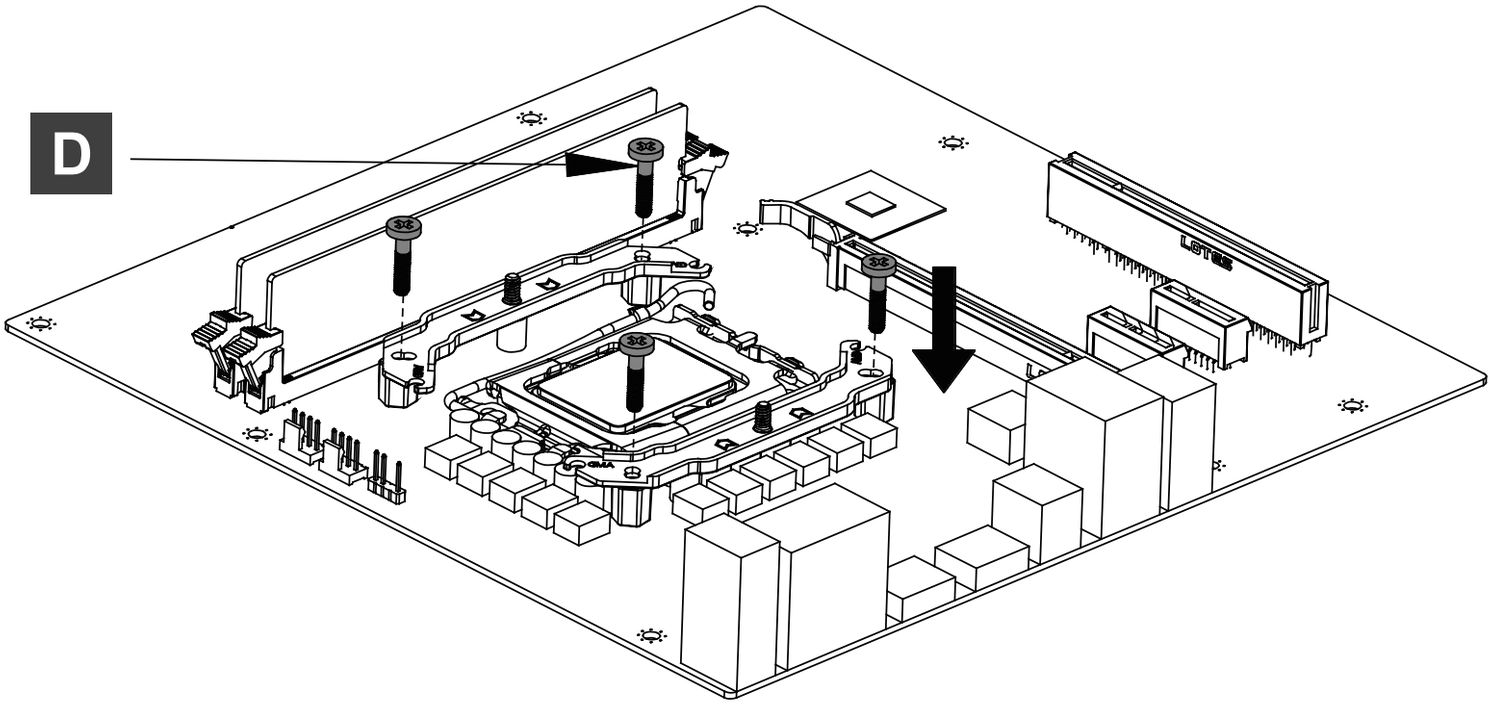

1

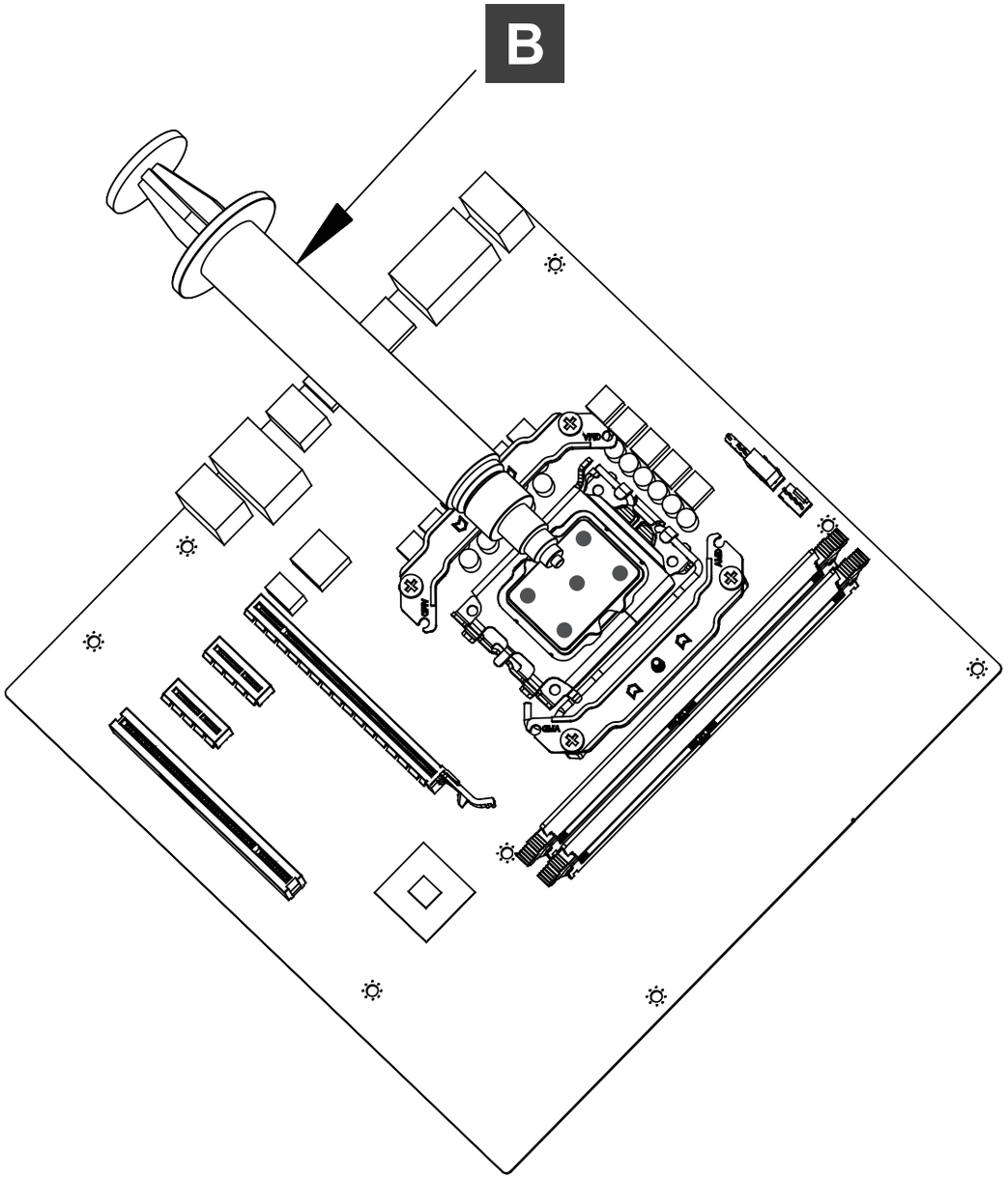

2

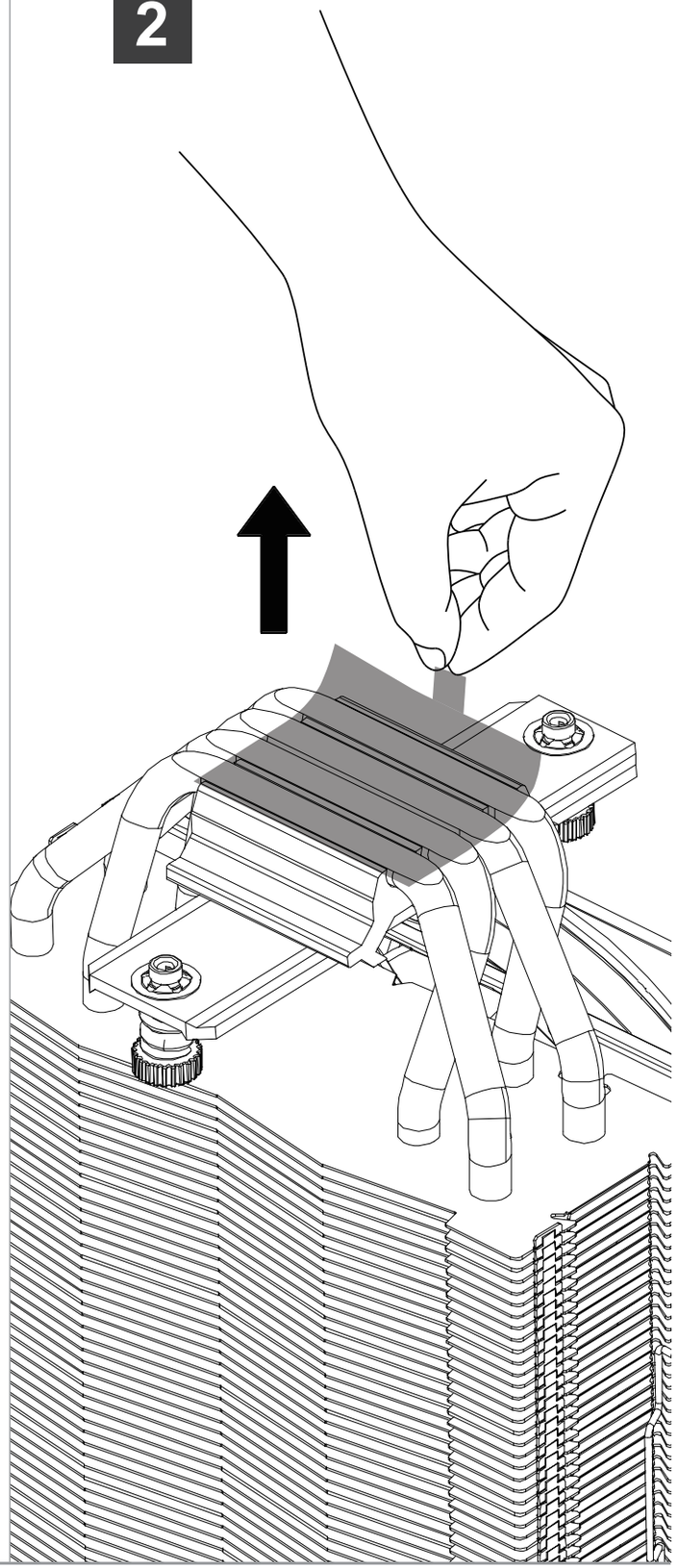

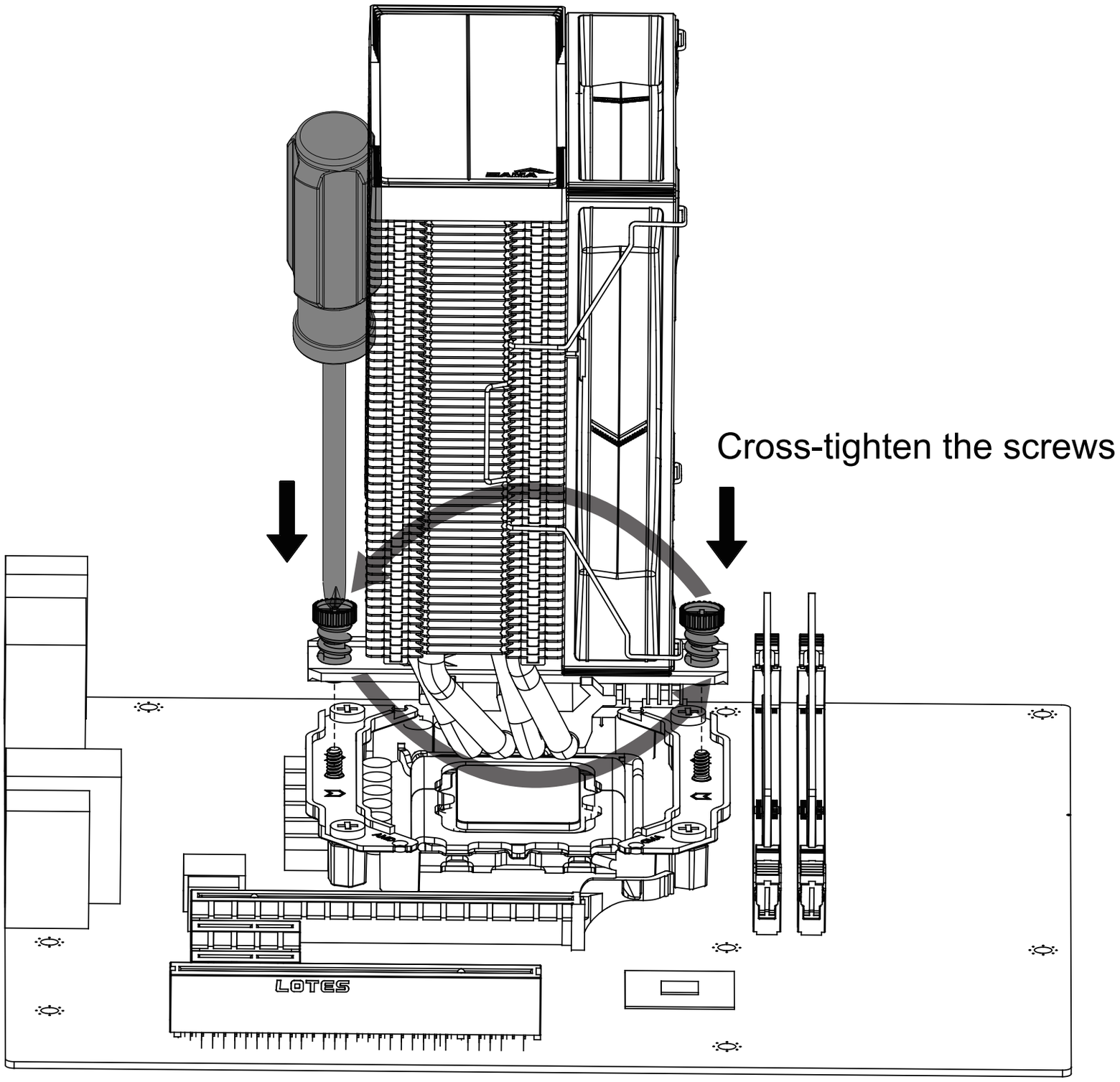
Cross-tighten the screws
LOTES

07 INTEL-LGA 1851/1700/1200/115X

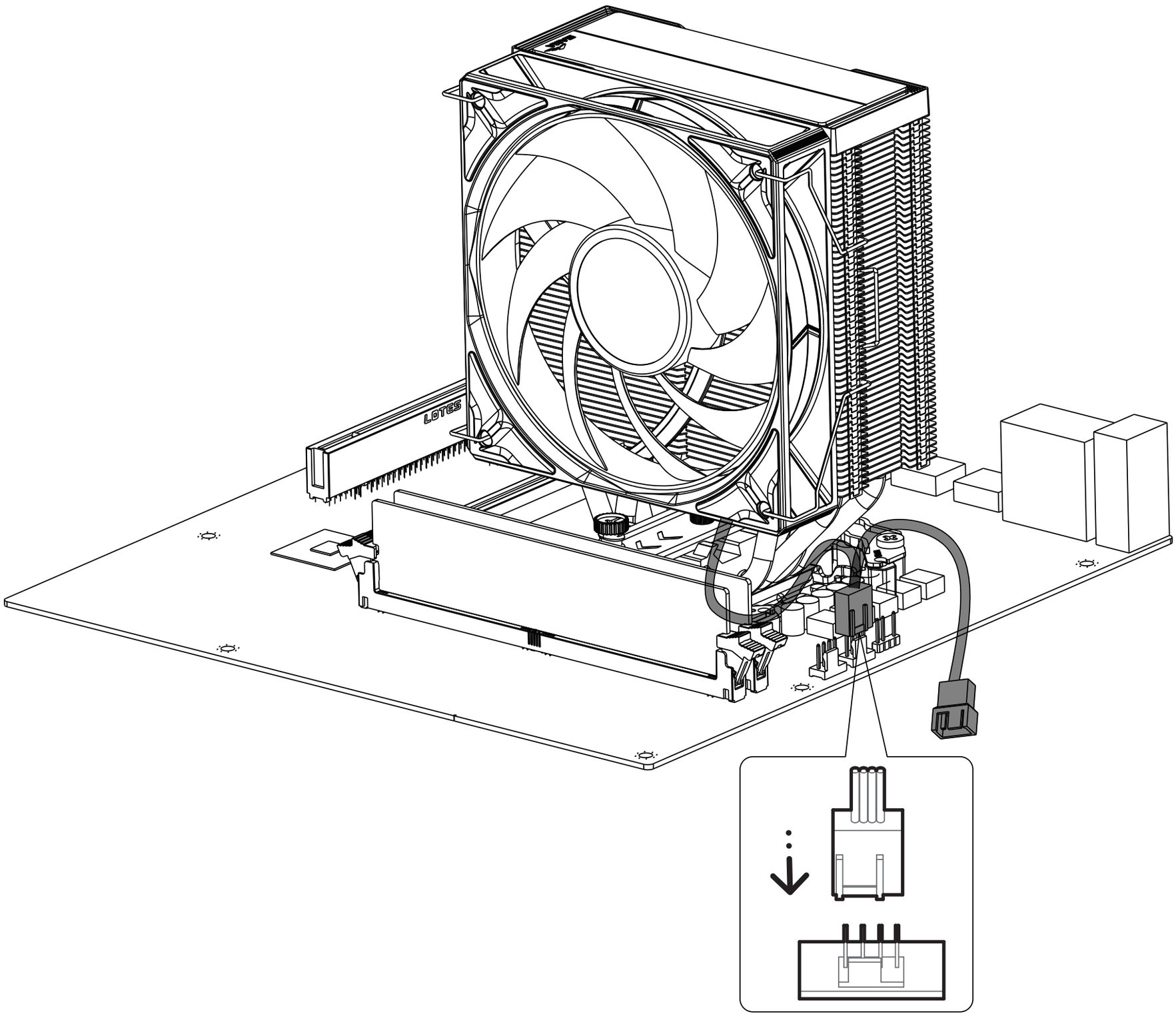

4-PIN/CPU_FAN/CPU_OPT

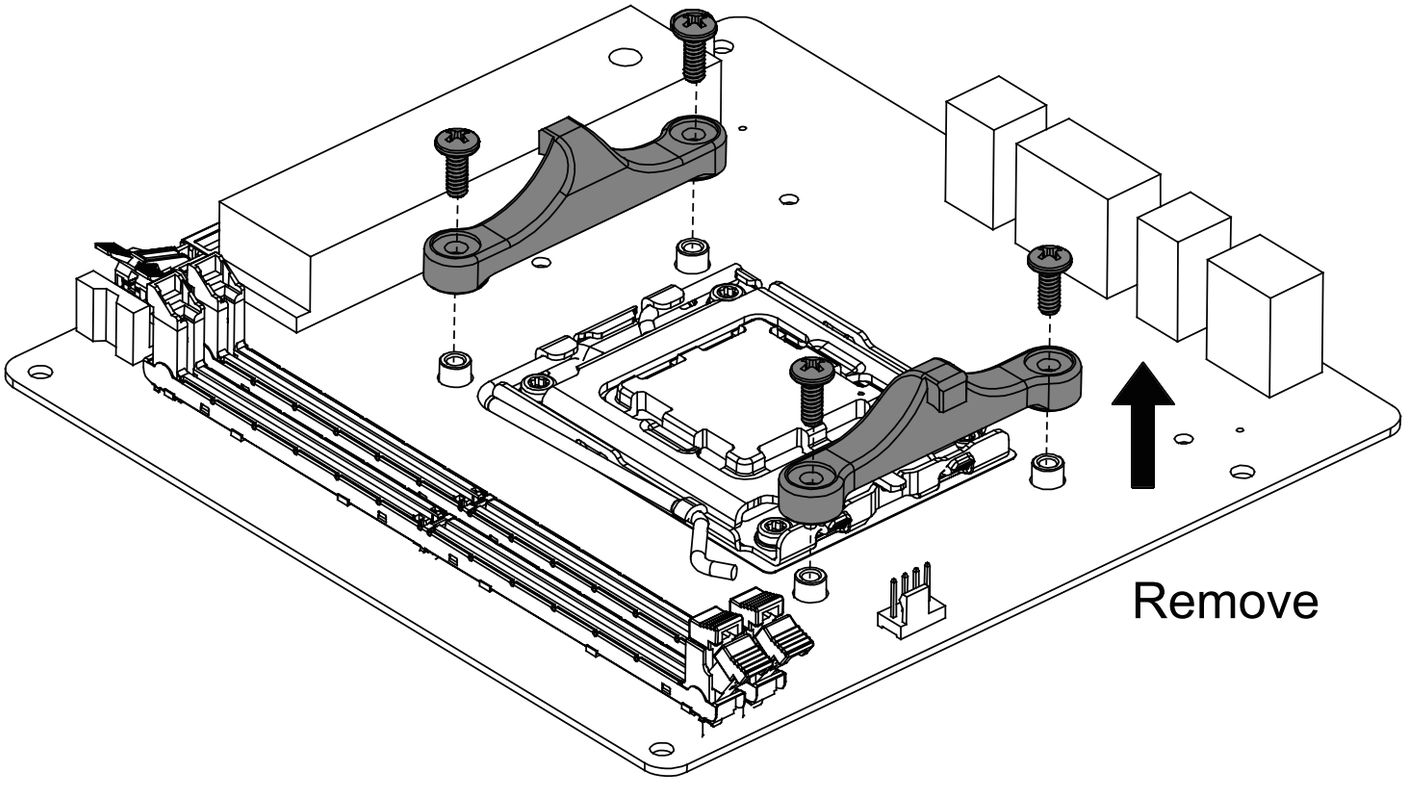

C

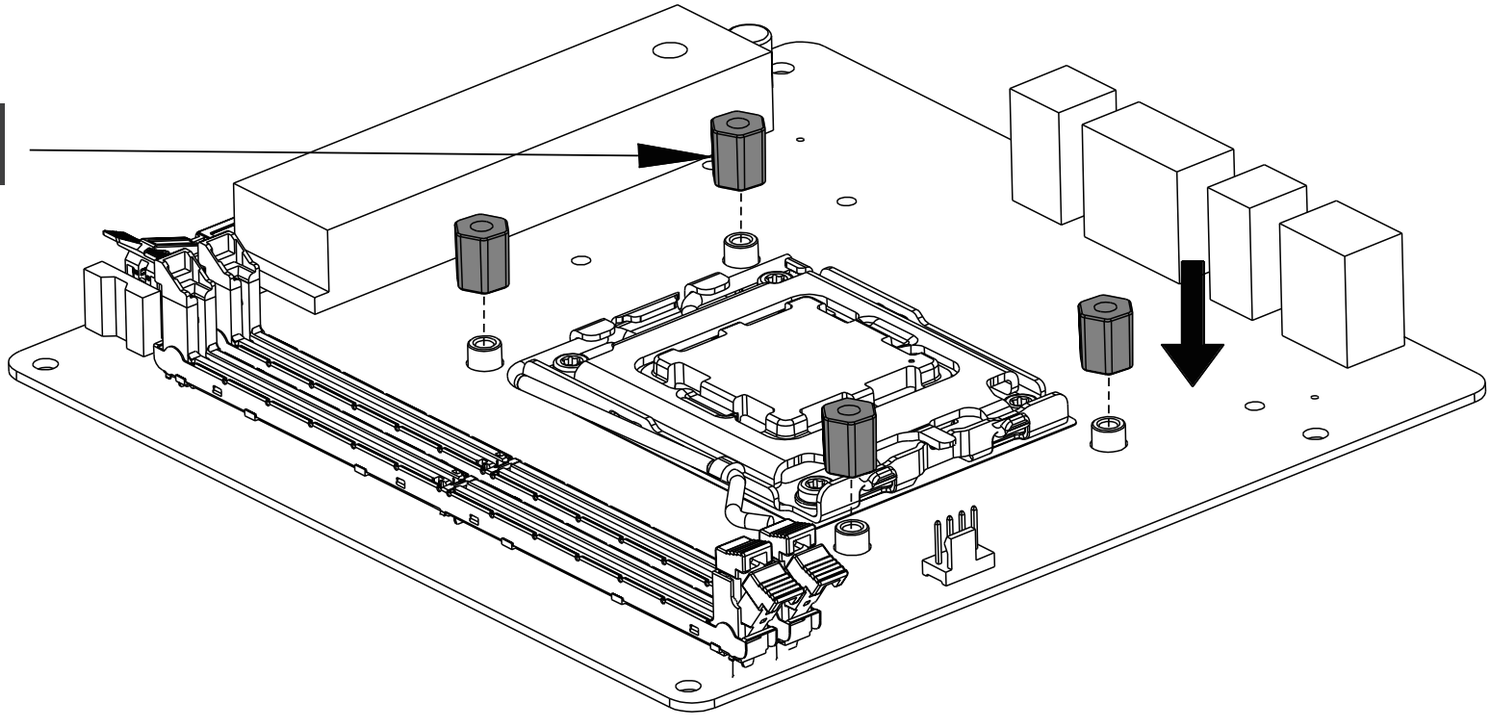

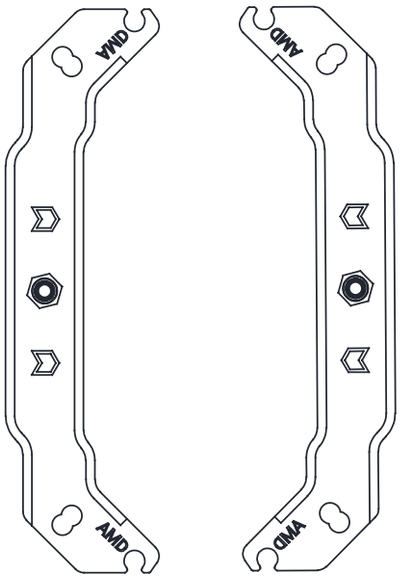
AMD
AMD
AMD
AMD

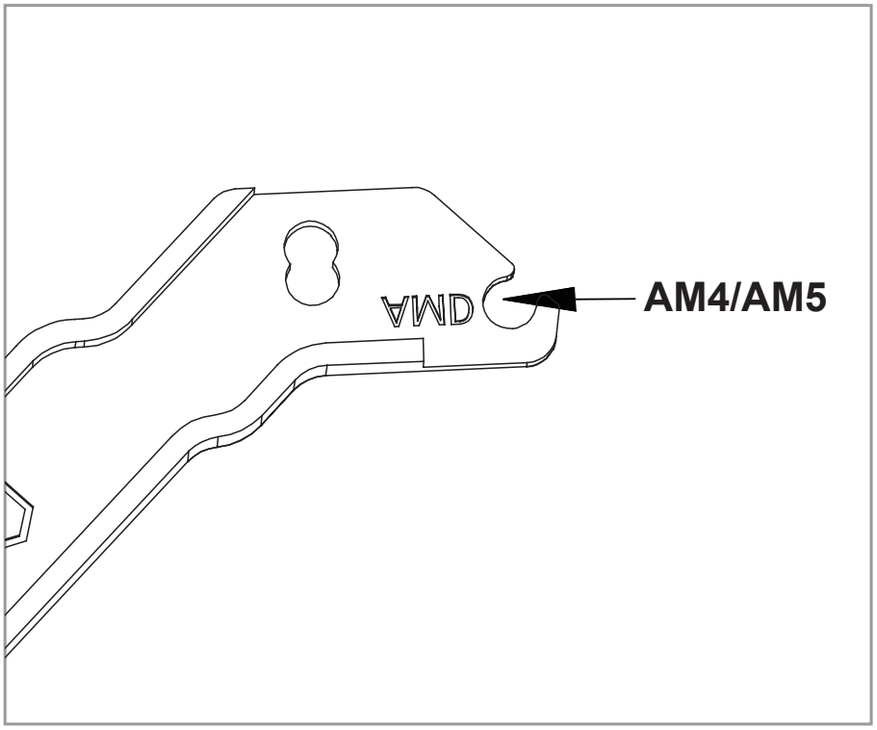
AMD
AM4/AM5

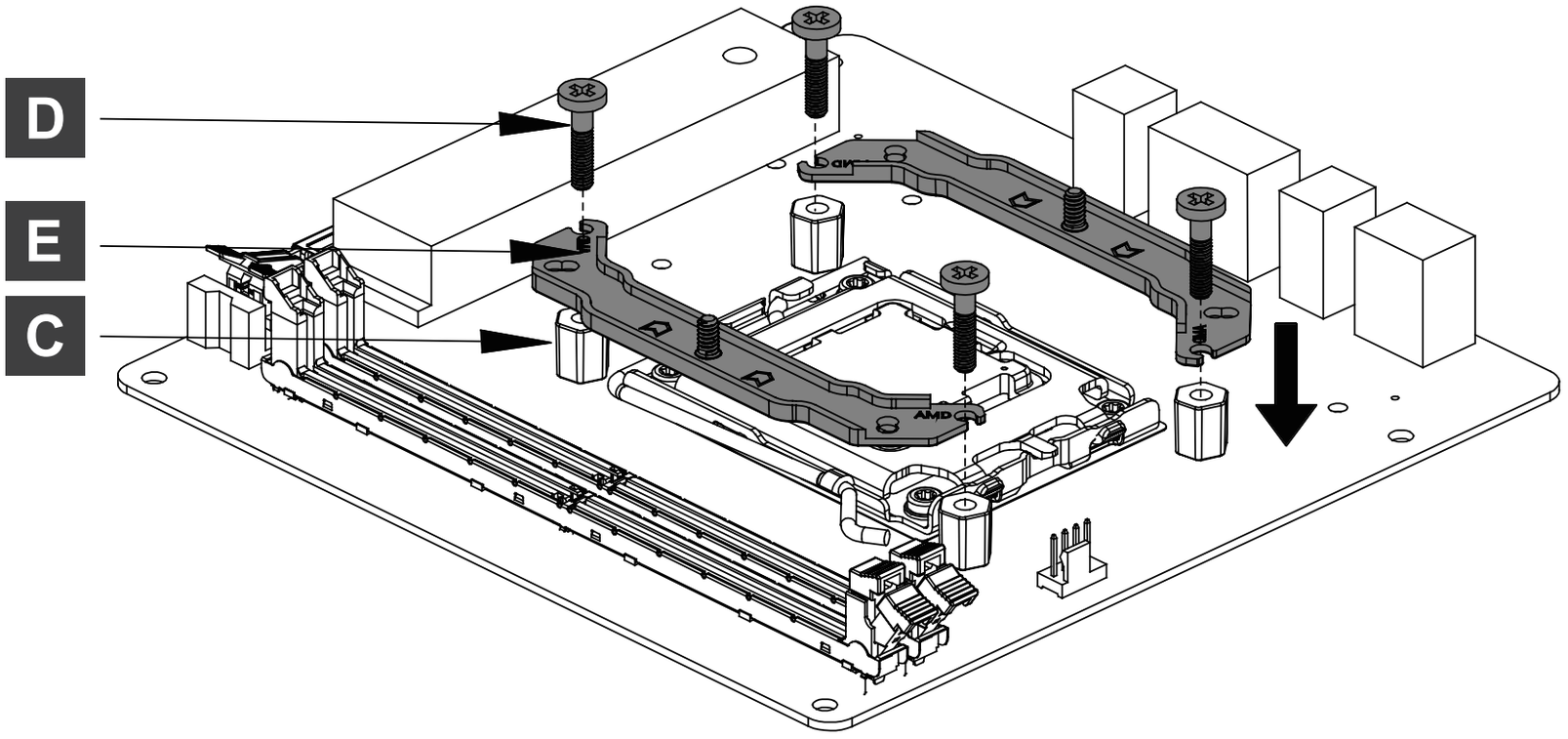
D
E
C
AMD

1

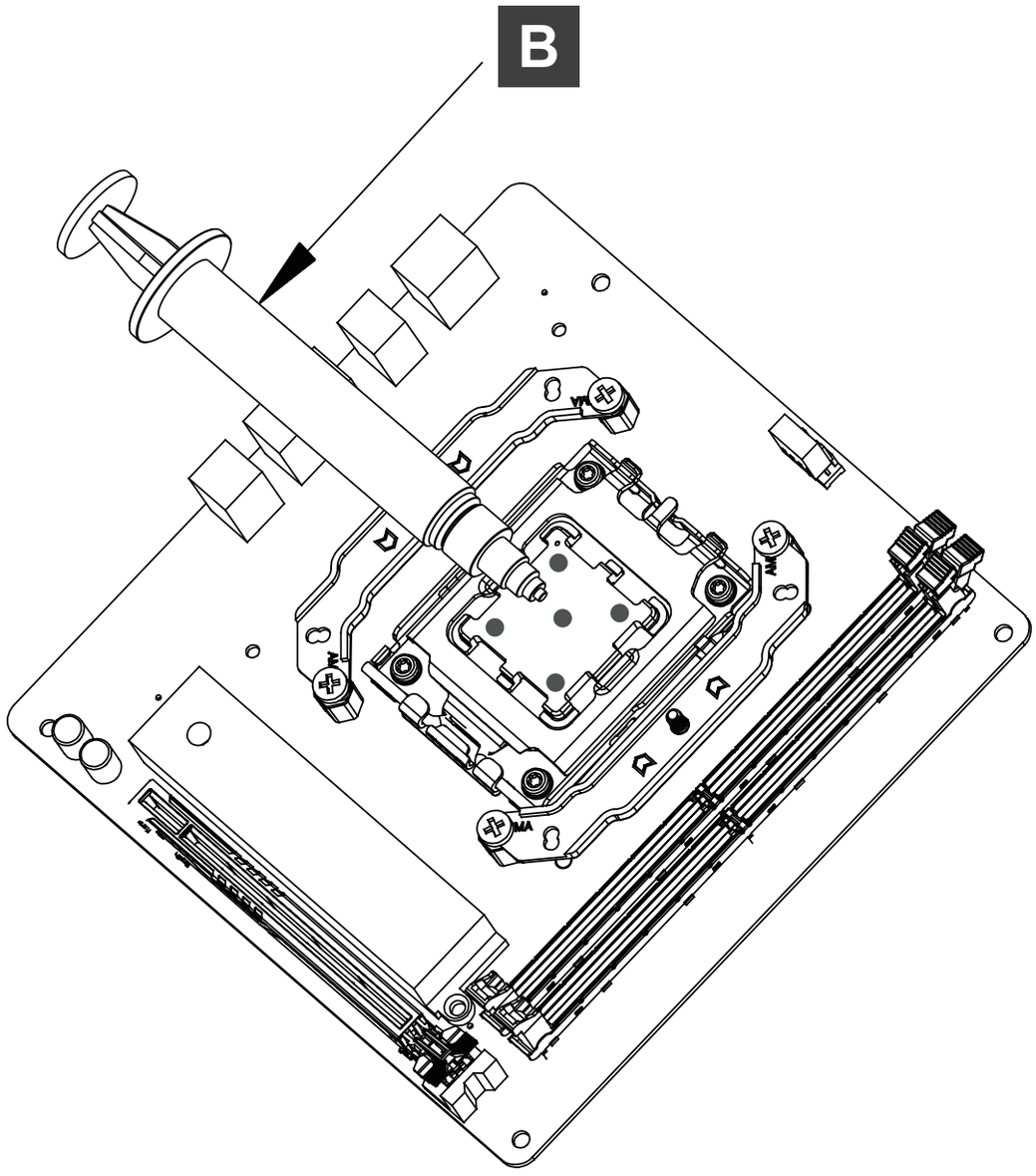

2

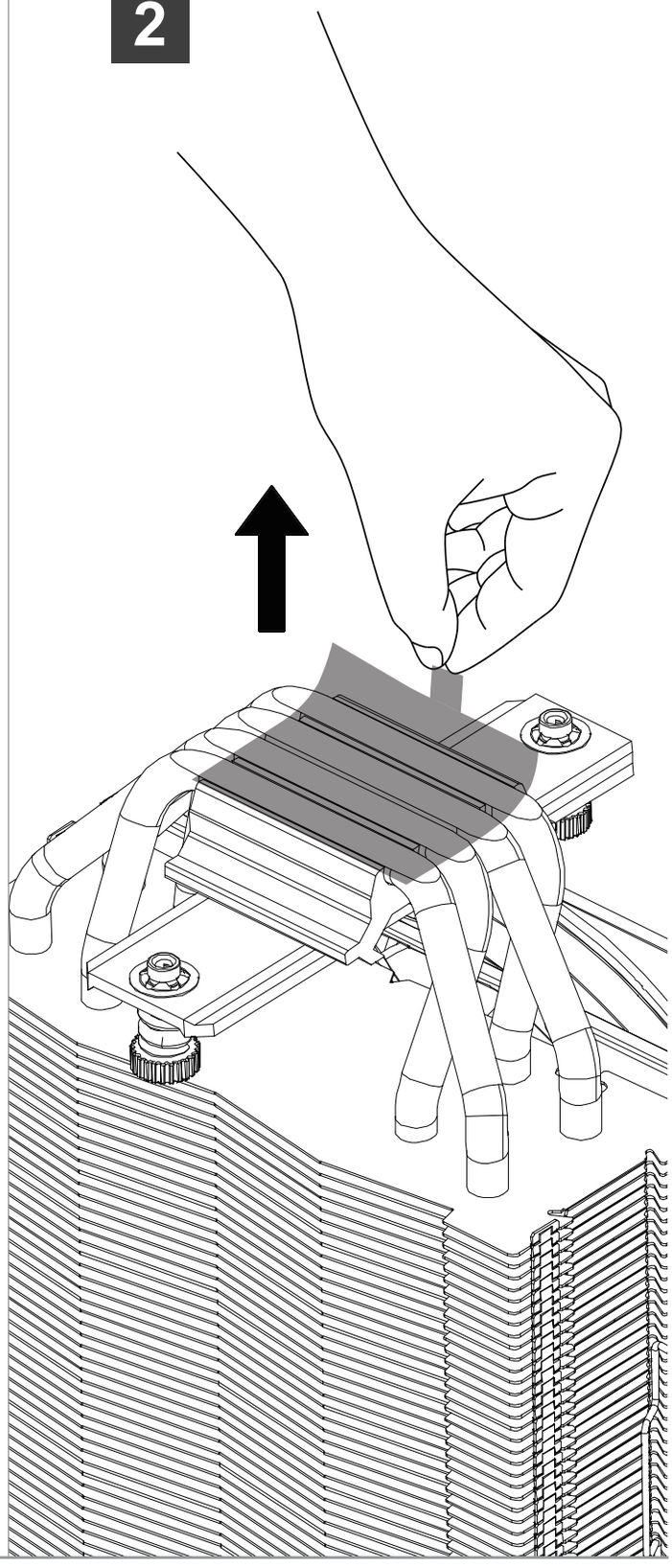

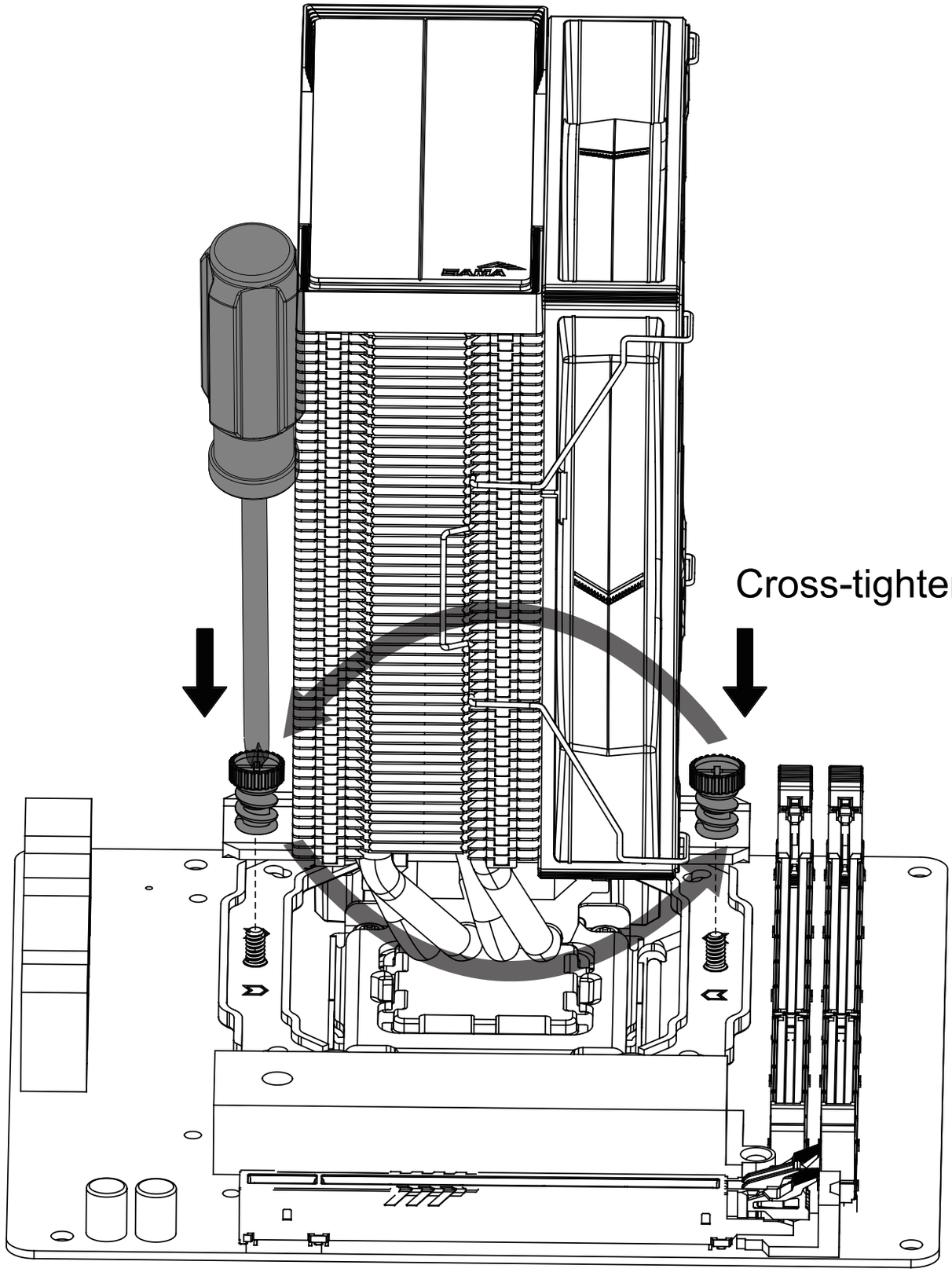
Cross-tighten the screws

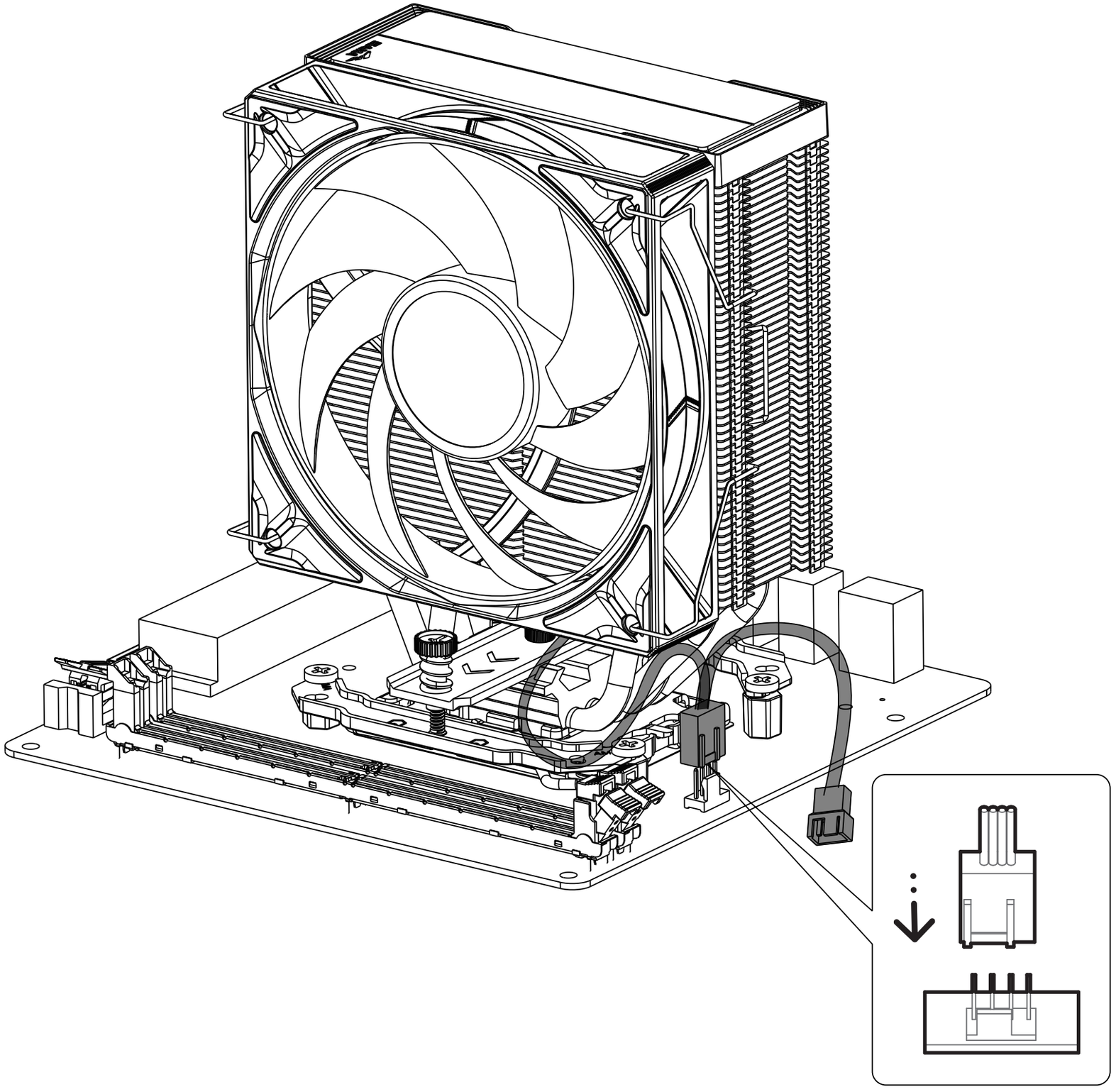

4-PIN/CPU_FAN/CPU_OPT

13 INTEL&AMD (ARGB)

