ASRock

B840M-HVS

User Manual

Contact Information

If you need to contact ASRock or want to know more about ASRock, you're welcome to visit ASRock's website at http://www.asrock.com; or you may contact your dealer for further information. For technical questions, please submit a support request form at https://event.asrock.com/tsd.asp

ASRock Incorporation

e-mail: info@asrock.com.tw

ASRock EUROPE B.V.

e-mail: sales@asrock.nl

ASRock America, Inc.

e-mail: sales@asrockamerica.com

Scan the QR code to view more manuals and documents.

Contents

Chapter 1 Introduction **1**

1.1 Package Contents 1

1.2 Specifications 2

1.3 Motherboard Layout 6

1.4 I/O Panel 8

1.5 Block Diagram 9

Chapter 2 Installation **10**

2.1 Installing the CPU 11

2.2 Installing the CPU Fan and Heatsink 14

2.3 Installing Memory Modules (DIMM) 23

2.4 Connecting the Front Panel Header 25

2.5 Installing the I/O Panel Shield 26

2.6 Installing the Motherboard 27

2.7 Installing SATA Drives 28

2.8 Installing a Graphics Card 30

2.9 Connecting Peripheral Devices 32

2.10 Connecting the Power Connectors 33

2.11 Power On 34

2.12 Jumpers Setup 35

2.13 Onboard Headers and Connectors 36

2.14 Smart Button 46

2.15 Post Status Checker 48

2.16 M.2 2230 WiFi/BT PCIe WiFi module Installatio Guide 49
2.17 M.2 SSD Installation Guide (M2_1) 51
2.18 M.2 SSD Installation Guide (M2_2) 53

Chapter 1 Introduction

Thank you for purchasing ASRock B840M-HVS motherboard, a reliable motherboard produced under ASRock's consistently stringent quality control. It delivers excellent performance with robust design conforming to ASRock's commitment to quality and endurance.

Because the motherboard specifications and the BIOS software might be updated, the content of this documentation will be subject to change without notice. In case any modifications of this documentation occur, the updated version will be available on ASRock's website without further notice. If you require technical support related to this motherboard, please visit our website for specific information about the model you are using. You may find the latest VGA cards and CPU support list on ASRock's website as well. ASRock website http://www.asrock.com.

1.1 Package Contents

- ASRock B840M-HVS Motherboard (Micro ATX Form Factor)
- 1 x I/O Shield
- 2 x Serial ATA (SATA) Data Cables (Optional)
- 1 x Screw for M.2 Socket (Optional)

1.2 Specifications

Platform	• Micro ATX Form Factor • 2oz Copper PCB
CPU	• Supports AMD Socket AM5 Ryzen™ 9000, 8000 and 7000 Series Processors* * Please refer to CPU Support List on ASRock's website for more information. (http://www.asrock.com/) * The availability of expansion slots may vary by CPU. Please refer to PCIe/M.2 Bandwidth Table for details. (http://www.asrock.com/)
Chipset	• AMD B840
Memory	• Dual Channel DDR5 Memory Technology • 2 x DDR5 DIMM Slots • Supports DDR5 non-ECC, un-buffered memory up to 6800+(OC)* • Max. capacity of system memory: 128GB • Supports Extreme Memory Profile (XMP) and EXTended Profiles for Overclocking (EXPO) memory modules * Please refer to Memory Support List on ASRock's website for more information. (http://www.asrock.com/)
Expansion Slot	CPU: • 1 x PCIe 4.0 x16 Slot (PCIE1), supports x16 mode* Chipset: • 2 x PCIe 3.0 x1 Slots (PCIE2 and PCIE3)* • 1 x M.2 Socket (Key E), supports type 2230 WiFi/BT PCIe WiFi module * PCIE1 will run at Gen4x16 with 9000 and 7000 series processors, Gen4x8 with 8000 (Phoenix 1) series processors and Gen4x4 with 8000 (Phoenix 2) series processors. * Supports NVMe SSD as boot disks • 15μ Gold Contact in VGA PCIe Slot (PCIE1)
Graphics	• Integrated AMD RDNA™ graphics (Actual support may vary by CPU)

	• 1 x HDMI 2.1 TMDS/FRL 8G Compatible, supports HDR, HDCP 2.3 and max. resolution up to 4K 120Hz • 1 x D-Sub, supports max. resolution up to Full HD (1920x1080) 60Hz
Audio	• 7.1 CH HD Audio (Realtek ALC897 Audio Codec)
LAN	• Gigabit LAN 10/100/1000 Mb/s • Realtek RTL8111H
USB	CPU: • 3 x USB 3.2 Gen1 Type-A (Rear (USB32_2, USB32_34)) Chipset: • 1 x USB 3.2 Gen1 Type-C (Front) • 3 x USB 3.2 Gen1 Type-A (1 Rear (USB32_1), 2 Front) • 8 x USB 2.0 (4 Rear (USB_1234), 4 Front) * All USB ports support ESD Protection
Rear Panel I/O	• 2 x Antenna Mounting Points • 1 x D-Sub Port • 1 x HDMI Port • 4 x USB 3.2 Gen1 Type-A Ports • 4 x USB 2.0 Ports • 1 x RJ-45 LAN Port • 1 x BIOS Flashback Button • HD Audio Jacks: Line in / Front Speaker / Microphone
Storage	CPU: • 1 x Hyper M.2 Socket (M2_1, Key M), supports type 2280 PCIe Gen4x4 (64 Gb/s) mode* Chipset: • 1 x Ultra M.2 Socket (M2_2, Key M), supports type 2260/2280 SATA3 6.0 Gb/s & PCIe Gen3x4 (32 Gb/s) modes* • 2 x SATA3 6.0 Gb/s Connectors * M2_1 is the first priority for M.2 installation. * Supports NVMe SSD as boot disks

RAID	• Supports RAID 0 and RAID 1 for SATA storage devices • Supports RAID 0, RAID 1 and RAID 10 for M.2 NVMe storage devices* * Requires additional M.2 NVMe expansion cards to support RAID 10
Connector	• 1 x Power LED and Speaker Header • 1 x RGB LED Header* • 3 x Addressable LED Headers** • 1 x CPU Fan Connector (4-pin) (Smart Fan Speed Control)*** • 3 x Chassis Fan Connectors (4-pin) (Smart Fan Speed Control)*** • 1 x 24 pin ATX Power Connector • 1 x 8 pin 12V Power Connector (Hi-Density Power Connector) • 1 x Front Panel Audio Connector • 2 x USB 2.0 Headers (Support 4 USB 2.0 ports) • 1 x USB 3.2 Gen1 Header (Supports 2 USB 3.2 Gen1 ports) • 1 x Front Panel Type C USB 3.2 Gen1 Header * Supports in total up to 12V/3A, 36W LED Strip ** Support in total up to 5V/3A, 15W LED Strip *** CPU_FAN1 supports the fan power up to 1A (12W). *** CHA_FAN1~3/WP support the fan power up to 3A (36W). *** CHA_FAN1~3/WP can auto detect if 3-pin or 4-pin fan is in use.
BIOS Feature	• AMI UEFI Legal BIOS with GUI support
OS	• Microsoft® Windows® 10 64-bit / 11 64-bit
Certifications	• FCC, CE • ErP/EuP ready (ErP/EuP ready power supply is required)

** For detailed product information, please visit our website: http://www.asrock.com*

Please realize that there is a certain risk involved with overclocking, including adjusting the setting in the BIOS, applying Untied Overclocking Technology, or using third-party overclocking tools. Overclocking may affect your system's stability, or even cause damage to the components and devices of your system. It should be done at your own risk and expense. We are not responsible for possible damage caused by overclocking.

1.3 Motherboard Layout

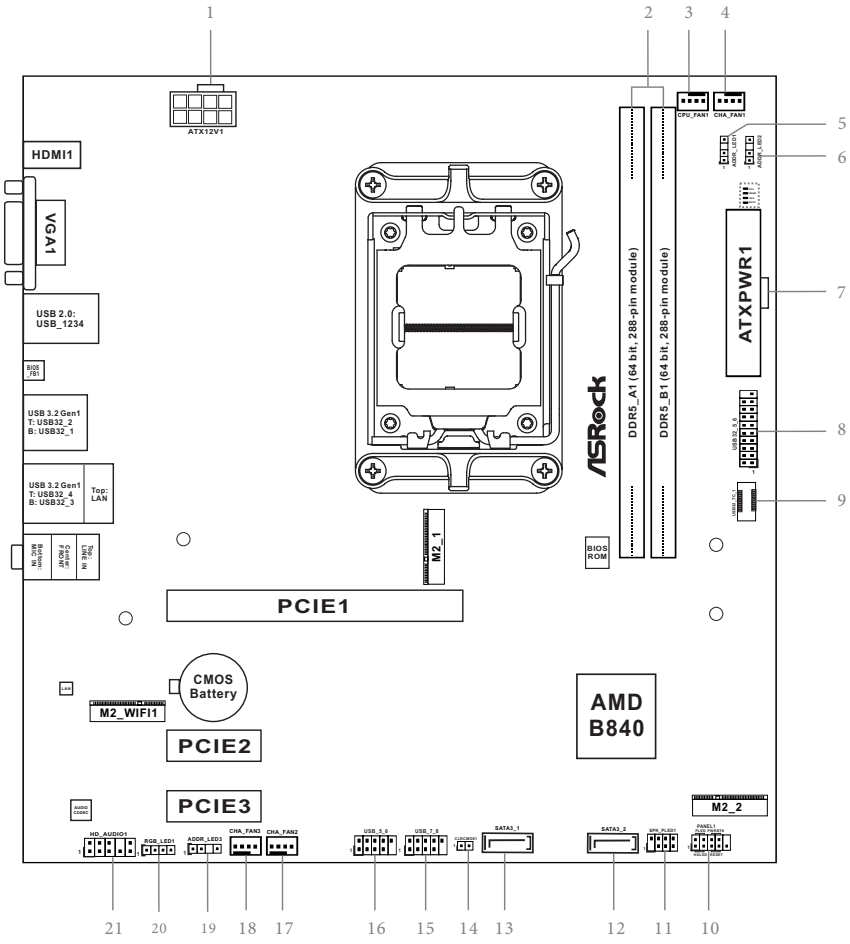

No.	Description
1	ATX 12V Power Connector (ATX12V1)
2	2 x 288-pin DDR5 DIMM Slots (DDR5_A1, DDR5_B1)
3	CPU Fan Connector (CPU_FAN1)
4	Chassis Fan Connector (CHA_FAN1)
5	Addressable LED Header (ADDR_LED1)
6	Addressable LED Header (ADDR_LED2)
7	ATX Power Connector (ATXPWR1)
8	USB 3.2 Gen1 Header (USB32_5_6)
9	Front Panel Type C USB 3.2 Gen1 Header (USB32_TC_1)
10	System Panel Header (PANEL1)
11	Power LED and Speaker Header (SPK_PLED1)
12	SATA3 Connector (SATA3_2)
13	SATA3 Connector (SATA3_1)
14	Clear CMOS Jumper (CLRCMOS1)
15	USB 2.0 Header (USB_7_8)
16	USB 2.0 Header (USB_5_6)
17	Chassis Fan Connector (CHA_FAN2)
18	Chassis Fan Connector (CHA_FAN3)
19	Addressable LED Header (ADDR_LED3)
20	RGB LED Header (RGB_LED1)
21	Front Panel Audio Header (HD_AUDIO1)

1.4 I/O Panel

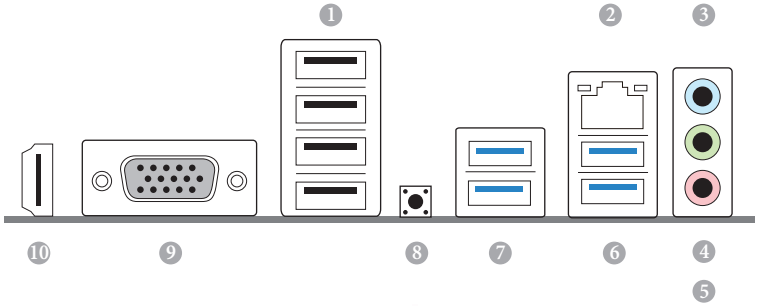

No.	Description	No.	Description
1	USB 2.0 Ports (USB_1234)	6	USB 3.2 Gen1 Type-A Ports (USB32_34)
2	LAN RJ-45 Port*	7	USB 3.2 Gen1 Type-A Ports (USB32_12)
3	Line In (Light Blue)**	8	BIOS Flashback Button
4	Front Speaker (Lime)**	9	D-Sub Port
5	Microphone (Pink)**	10	HDMI Port

** There are two LEDs on each LAN port. Please refer to the table below for the LAN port LED indications.*

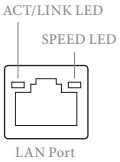

Activity / Link LED		Speed LED	
Status	Description	Status	Description
Off	No Link	Off	10Mbps connection
Blinking	Data Activity	Orange	100Mbps connection
On	Link	Green	1Gbps connection

*** **Function of the Audio Ports in 7.1-channel Configuration**:*

Port	Function
Light Blue (Rear panel)	Rear Speaker Out
Lime (Rear panel)	Front Speaker Out
Pink (Rear panel)	Central /Subwoofer Speaker Out
Lime (Front panel)	Side Speaker Out

1.5 Block Diagram

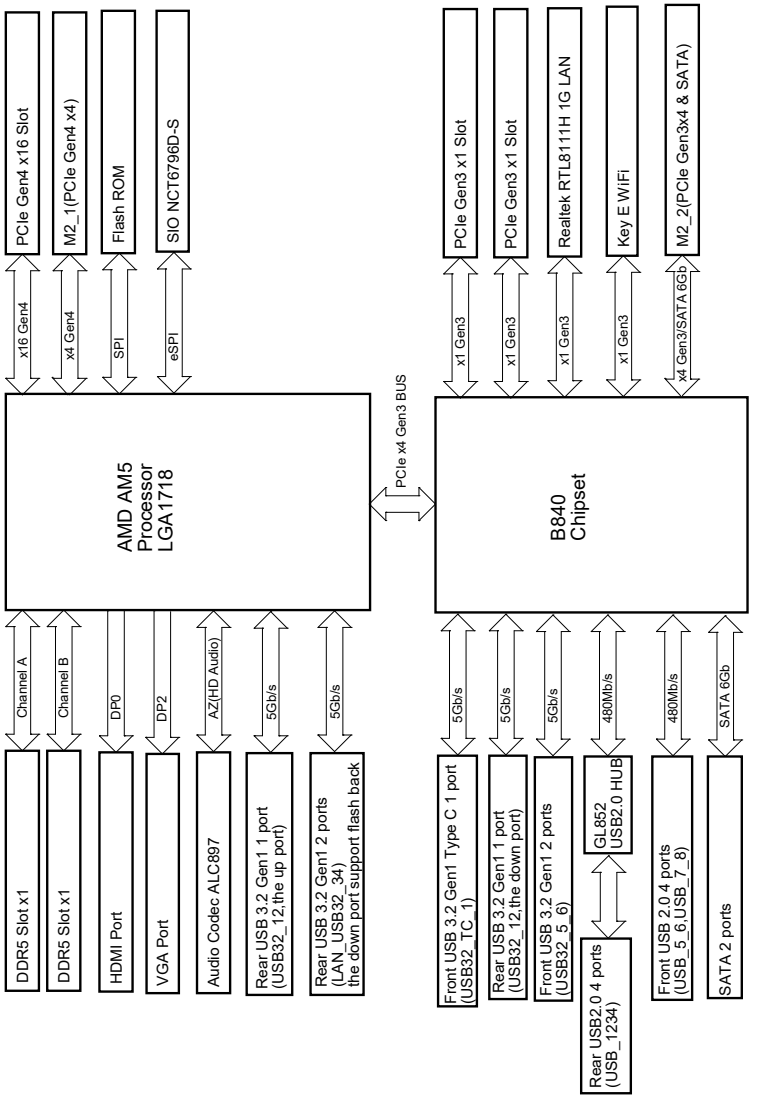

Chapter 2 Installation

This is a Micro ATX form factor motherboard. Before you install the motherboard, study the configuration of your chassis to ensure that the motherboard fits into it.

Pre-installation Precautions

Take note of the following precautions before you install motherboard components or change any motherboard settings.

- Make sure to unplug the power cord before installing or removing the motherboard components. Failure to do so may cause physical injuries and damages to motherboard components.
- In order to avoid damage from static electricity to the motherboard's components, NEVER place your motherboard directly on a carpet. Also remember to use a grounded wrist strap or touch a safety grounded object before you handle the components.
- Hold components by the edges and do not touch the ICs.
- Whenever you uninstall any components, place them on a grounded anti-static pad or in the bag that comes with the components.
- When placing screws to secure the motherboard to the chassis, please do not over-tighten the screws! Doing so may damage the motherboard.

2.1 Installing the CPU

1. *Before you insert the 1718-Pin CPU into the socket, please check if the **PnP cap** is on the socket, if the CPU surface is unclean, or if there are any **bent pins** in the socket. Do not force to insert the CPU into the socket if above situation is found. Otherwise, the CPU will be seriously damaged.*
2. *Unplug all power cables before installing the CPU.*

Tutorial Video

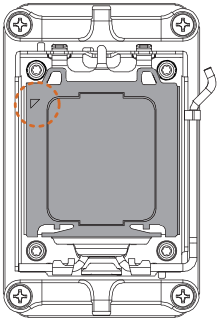

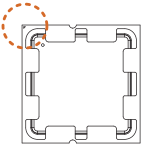

⚠ Turn your CPU to the correct orientation before opening the CPU socket cover.

English

1

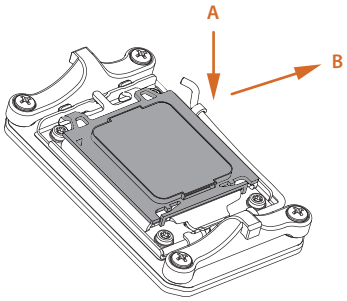

2

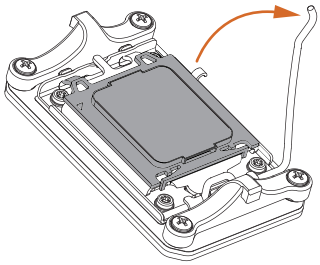

3

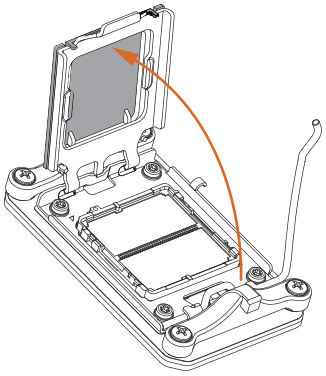

4

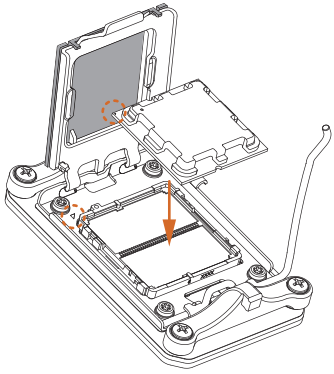

⚠ Carefully place the CPU in as flat as possible. Do not drop it.

5

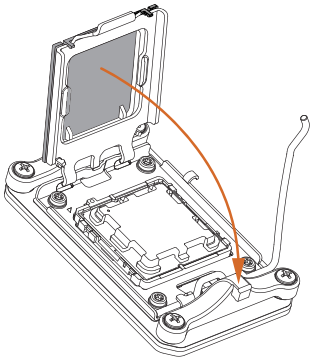

6

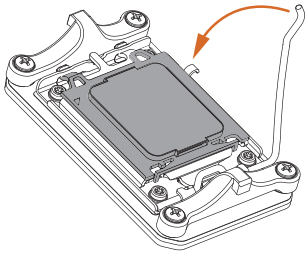

⚠ Make sure the CPU is aligned with the socket before locking it into place.

7

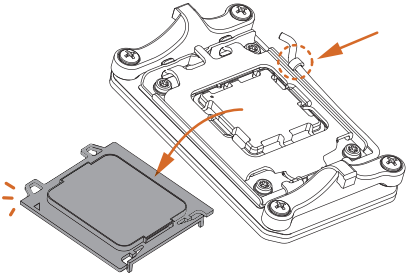

⚠ Make sure the black cover plate is always in place until it pops off when closing the socket lever.

Please save the cover if the processor is removed. The cover must be placed if you wish to return the motherboard for after service.

2.2 Installing the CPU Fan and Heatsink

After you install the CPU into this motherboard, it is necessary to install a larger heatsink and cooling fan to dissipate heat. You also need to spray thermal grease between the CPU and the heatsink to improve heat dissipation. Make sure that the CPU and the heatsink are securely fastened and in good contact with each other.

Please turn off the power or remove the power cord before changing a CPU or heatsink.

Installing the CPU Cooler (Type 1)

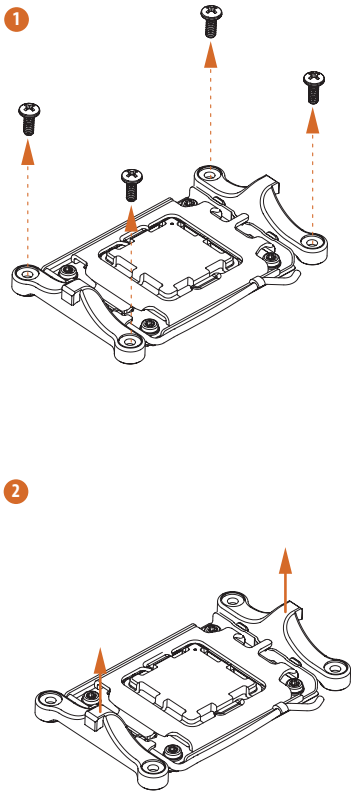

3

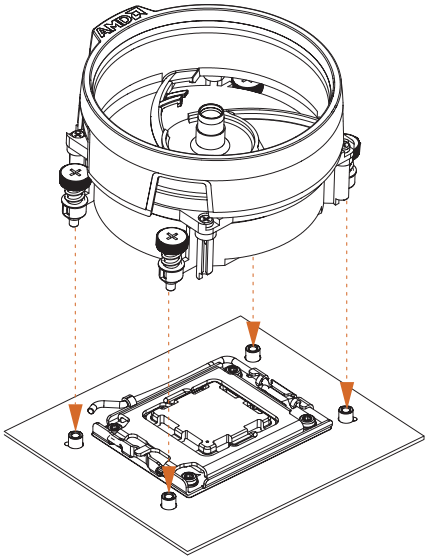

4

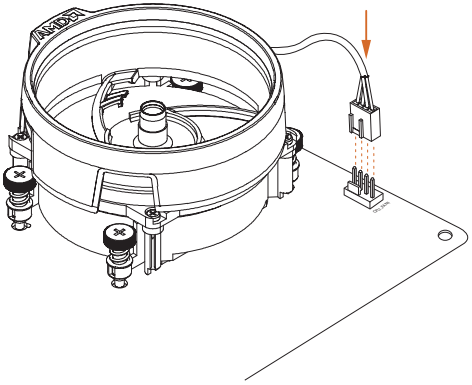

Installing the CPU Cooler (Type 2)

1

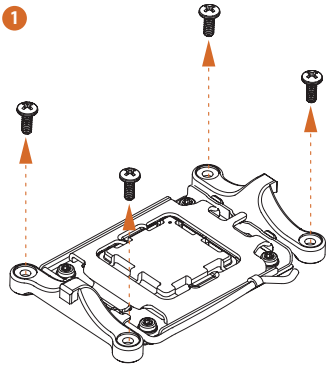

2

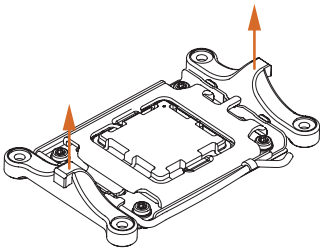

3

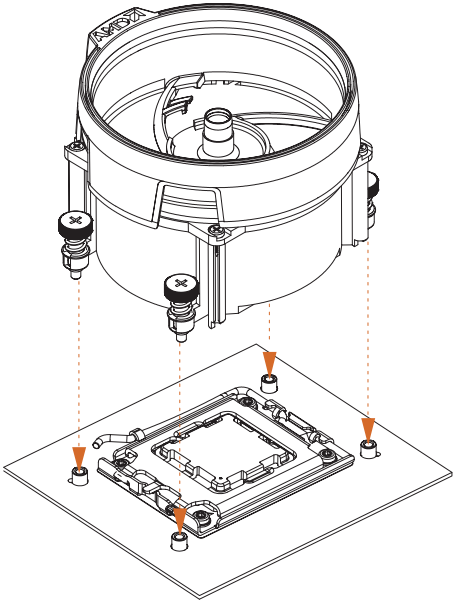

4

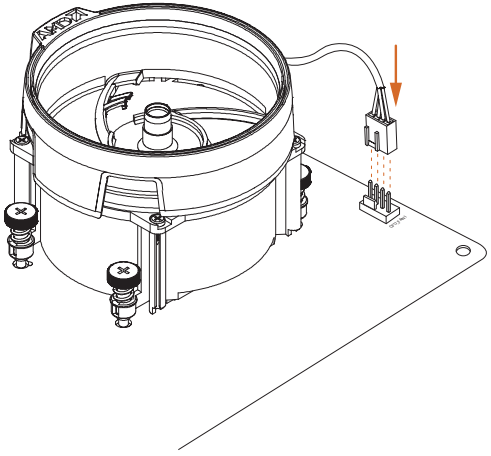

5

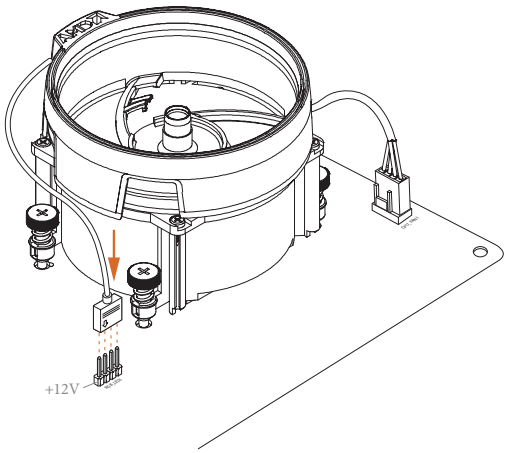

*The illustrations shown here are for reference purposes only and may not exactly match the model you purchase.

Installing the CPU Cooler (Type 3)

1

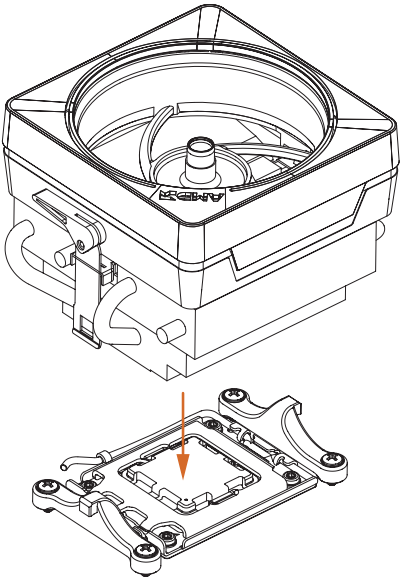

2

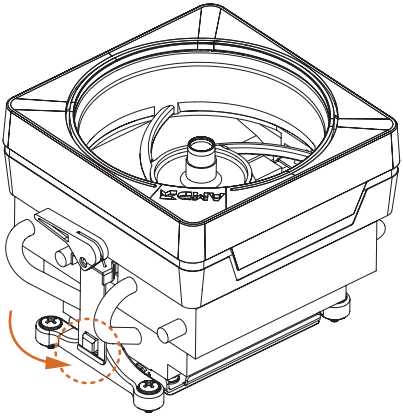

3

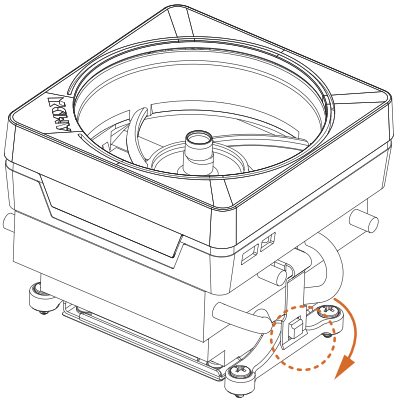

4

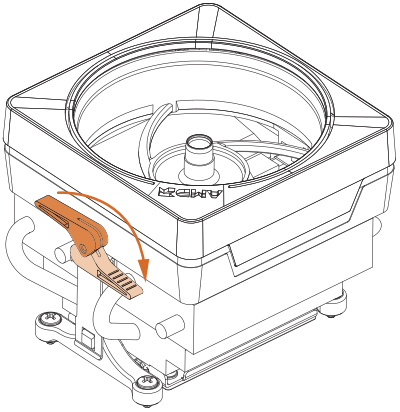

5

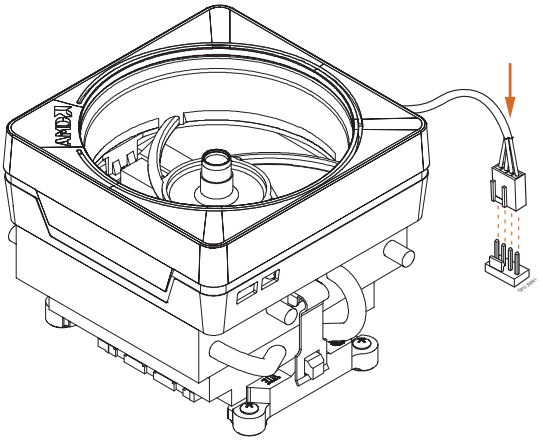

6

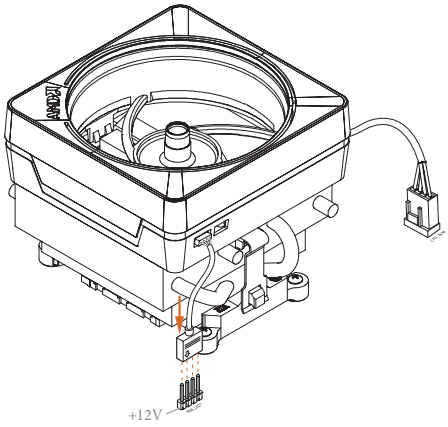

or

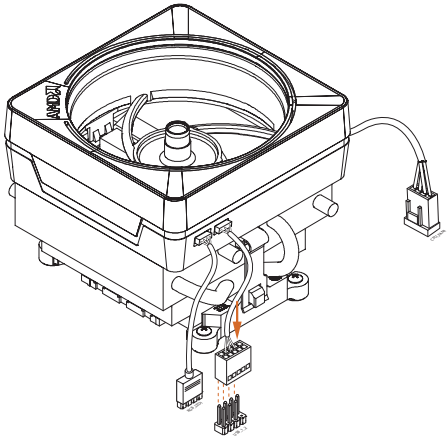

Please note that only one cable should be used at a time in this step.
If you select RGB_LED1, please install ASRock utility "ASRock Polychrome SYNC".
If you select USB connector, please install AMD utility "SR3 Settings Software".

*The illustrations shown here are for reference purposes only and may not exactly match the model you purchase.

2.3 Installing Memory Modules (DIMM)

This motherboard provides two 288-pin DDR5 (Double Data Rate 5) DIMM slots, and supports Dual Channel Memory Technology.

1. *For dual channel configuration, you always need to install identical (the same brand, speed, size and chip-type) DDR5 DIMM pairs.*
2. *It is unable to activate Dual Channel Memory Technology with only one memory module installed.*
3. *It is not allowed to install a DDR, DDR2 , DDR3 or DDR4 memory module into a DDR5 slot; otherwise, this motherboard and DIMM may be damaged.*
4. *The DIMM only fits in one correct orientation. It will cause permanent damage to the motherboard and the DIMM if you force the DIMM into the slot at incorrect orientation.*

Recommended Memory Configuration

1 DIMM

A1	B1
	V

2 DIMMs

A1	B1
V	V

The first boot may take some time.
Please be patient and refer to the following table for booting time.
*It may vary by different setups.

Memory	1st boot after clear CMOS
2 x 16GB	90 sec
2 x 32GB	150 sec

1

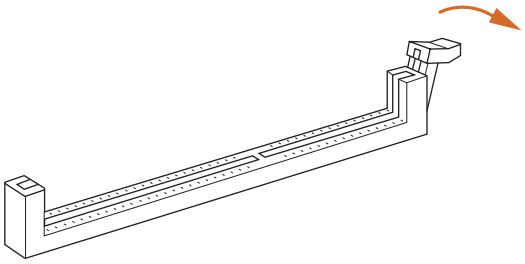

2

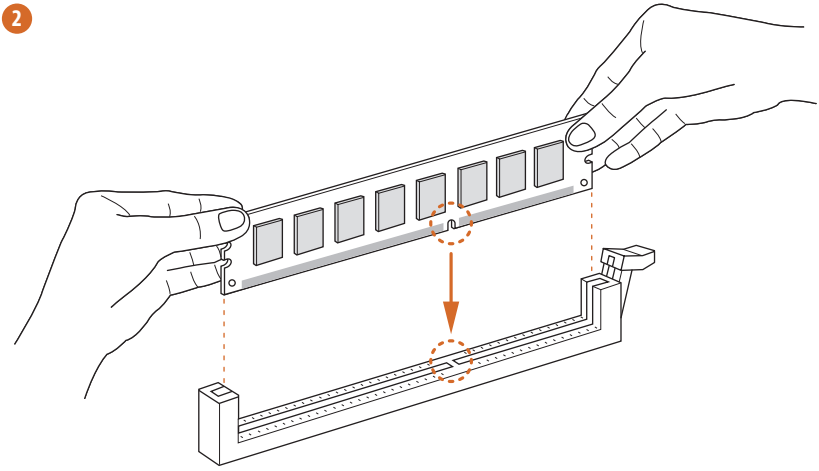

3

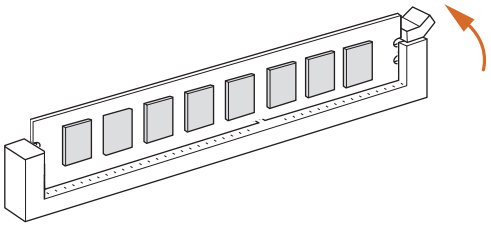

English

2.4 Connecting the Front Panel Header

1

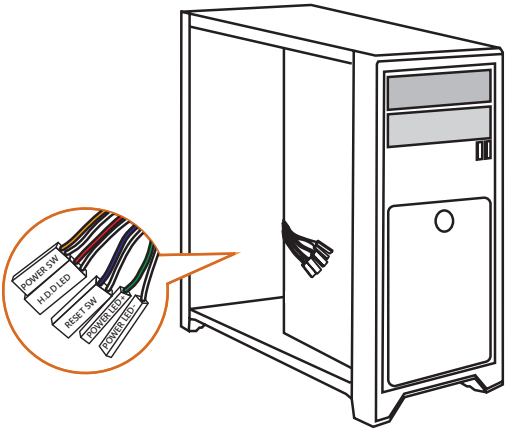

2

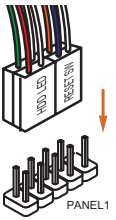

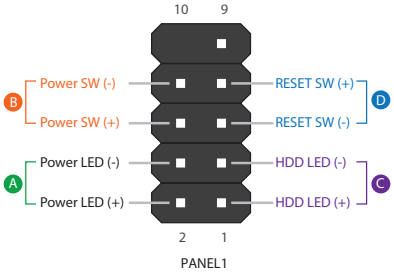

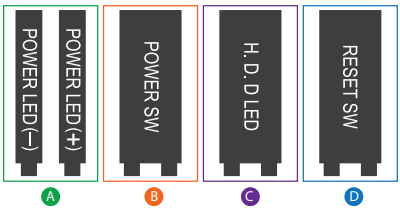

English

2.5 Installing the I/O Panel Shield

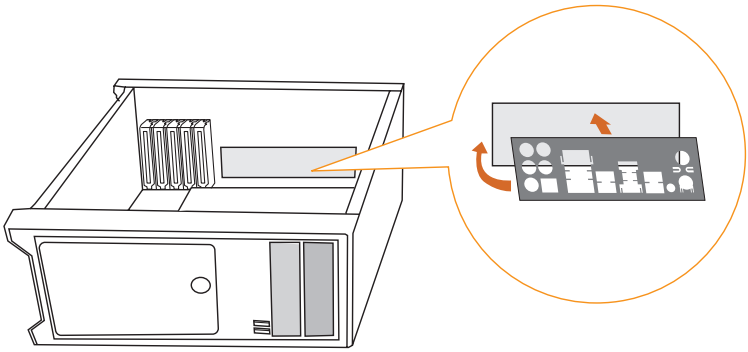

2.6 Installing the Motherboard

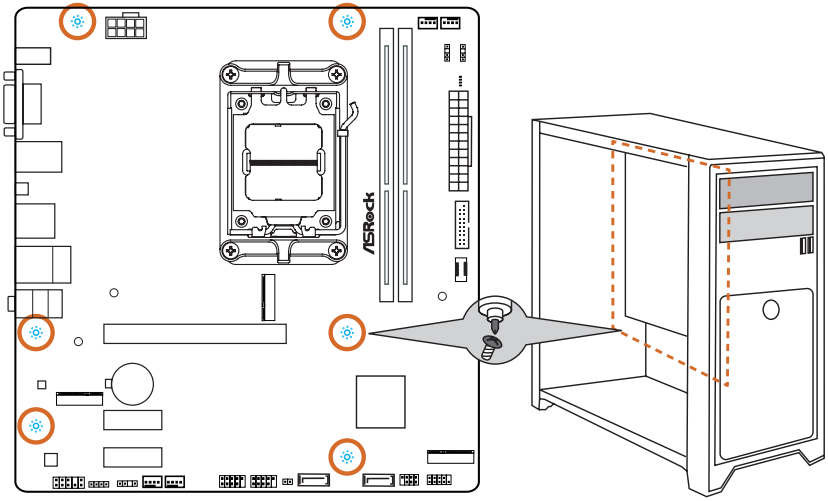

2.7 Installing SATA Drives

1

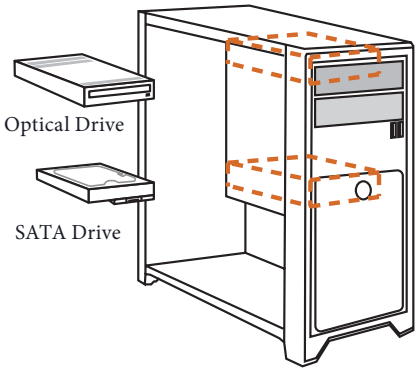

2

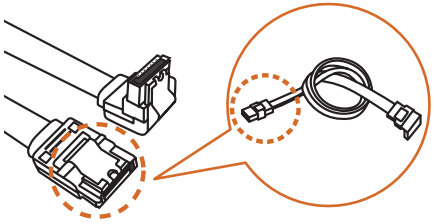

SATA Data Cable

3

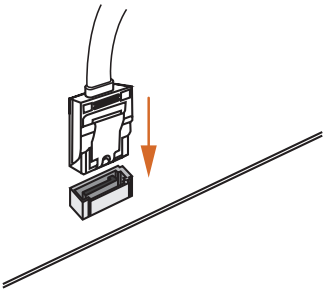

4

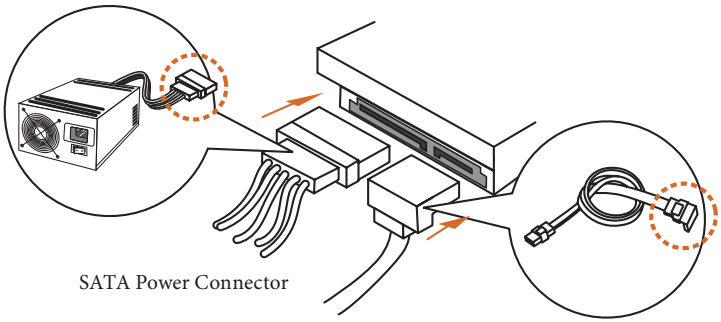

2.8 Installing a Graphics Card

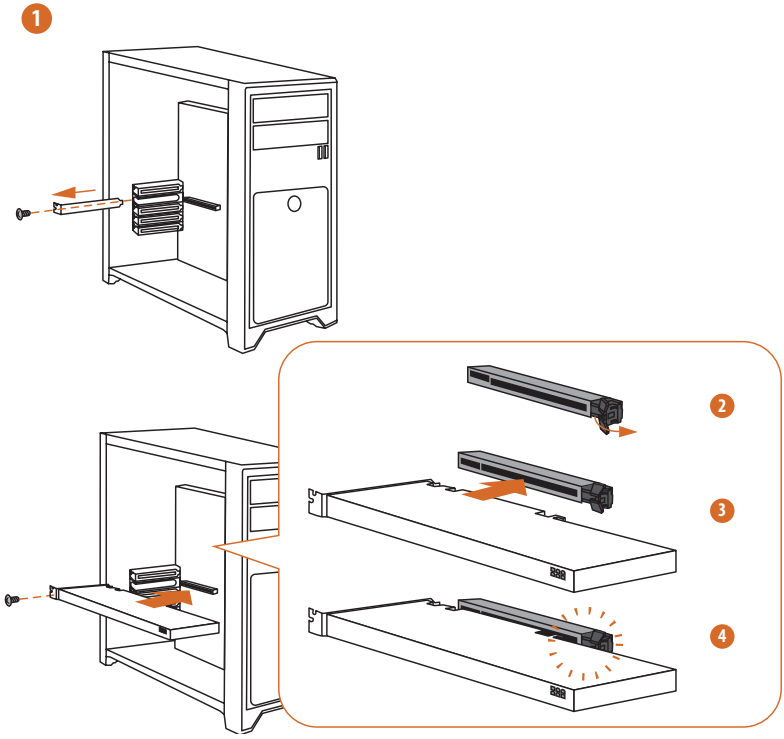

Expansion Slots (PCIe Slots)

There are 3 PCI Express slots on the motherboard.



Before installing an expansion card, please make sure that the power supply is switched off or the power cord is unplugged. Please read the documentation of the expansion card and make necessary hardware settings for the card before you start the installation.

PCIe slots:

PCIE1 (PCIe 4.0 x16 slot) is used for PCIe x16 lane width graphics cards.
PCIE2 (PCIe 3.0 x1 slot) is used for PCIe x1 lane width cards.
PCIE3 (PCIe 3.0 x1 slot) is used for PCIe x1 lane width cards.
* PCIE1 will run at Gen4x16 with 9000 and 7000 series processors, Gen4x8 with 8000 (Phoenix 1) series processors and Gen4x4 with 8000 (Phoenix 2) series processors.

2.9 Connecting Peripheral Devices

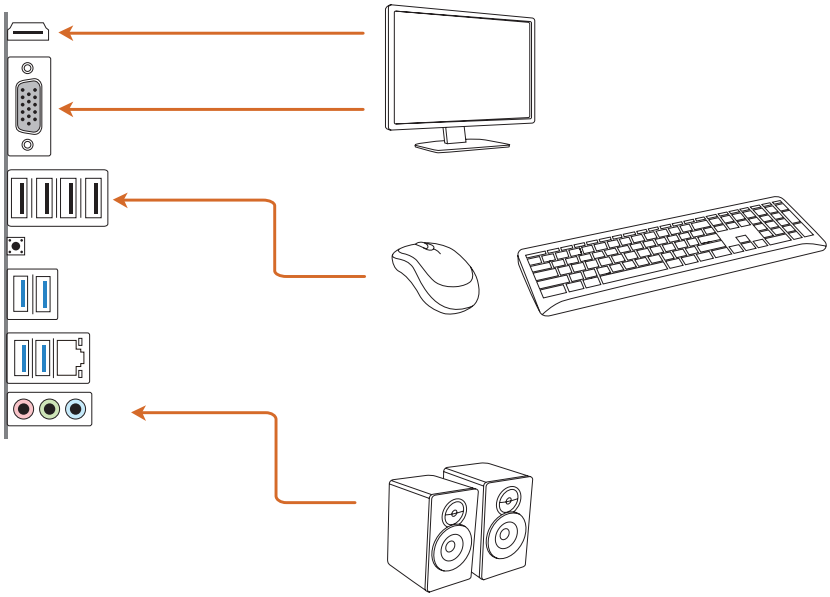

2.10 Connecting the Power Connectors

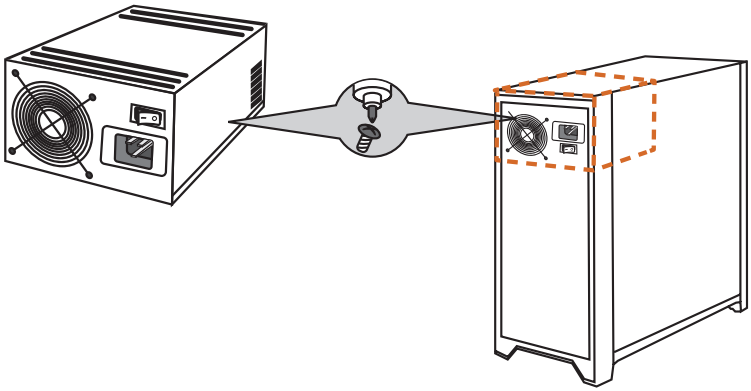

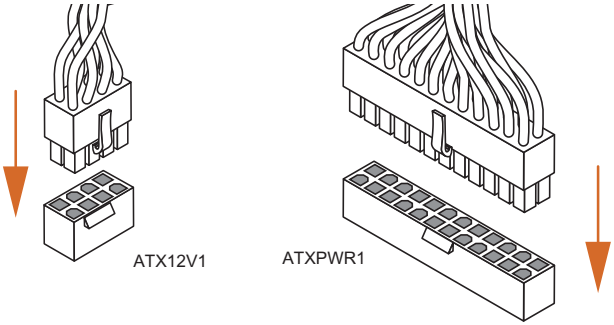

2.11 Power On

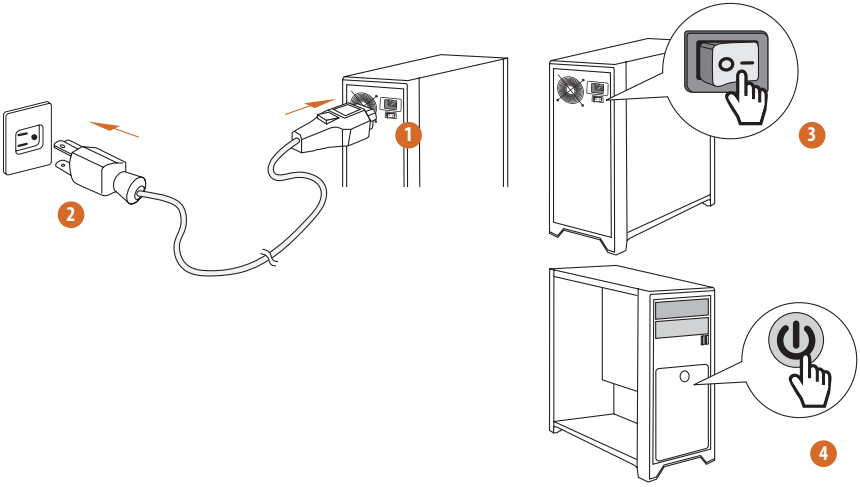

2.12 Jumpers Setup

The illustration shows how jumpers are setup. When the jumper cap is placed on the pins, the jumper is “Short”. If no jumper cap is placed on the pins, the jumper is “Open”.

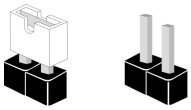

Clear CMOS Jumper
(CLRCMOS1) (see p.6, No. 14)

CLRCMOS1 allows you to clear the data in CMOS. The data in CMOS includes system setup information such as system password, date, time, and system setup parameters. To clear and reset the system parameters to default setup, please turn off the computer and unplug the power cord, then use a jumper cap to short the pins on CLRCMOS1 for 3 seconds. Please remember to remove the jumper cap after clearing the CMOS. If you need to clear the CMOS when you just finish updating the BIOS, you must boot up the system first, and then shut it down before you do the clear-CMOS action.

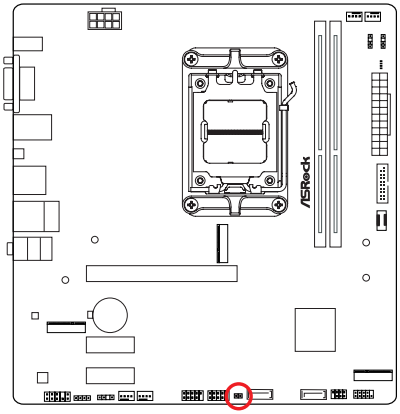

CLRCMOS1



2-pin Jumper

Short: Clear CMOS
Open: Default

2.13 Onboard Headers and Connectors

Onboard headers and connectors are NOT jumpers. Do NOT place jumper caps over these headers and connectors. Placing jumper caps over the headers and connectors will cause permanent damage to the motherboard.

System Panel Header
(9-pin PANEL1) (see p.6, No. 10)

Connect the power button, reset button and system status indicator on the chassis to this header according to the pin assignments below. Note the positive and negative pins before connecting the cables.

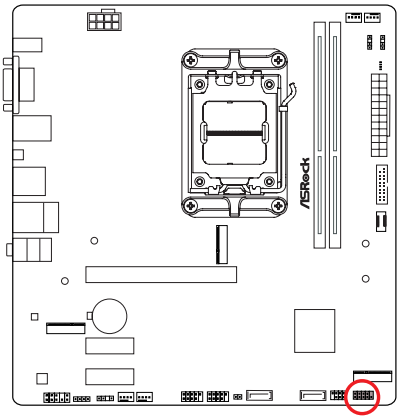

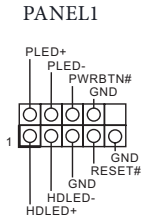

PWRBTN (Power Button):
Connect to the power button on the chassis front panel. You may configure the way to turn off your system using the power button.

RESET (Reset Button):
Connect to the reset button on the chassis front panel. Press the reset button to restart the computer if the computer freezes and fails to perform a normal restart.

PLED (System Power LED):
Connect to the power status indicator on the chassis front panel. The LED is on when the system is operating. The LED keeps blinking when the system is in S1/S3 sleep state. The LED is off when the system is in S4 sleep state or powered off (S5).

HDLED (Hard Drive Activity LED):
Connect to the hard drive activity LED on the chassis front panel. The LED is on when the hard drive is reading or writing data.

The front panel design may differ by chassis. A front panel module mainly consists of power button, reset button, power LED, hard drive activity LED, speaker and etc. When connecting your chassis front panel module to this header, make sure the wire assignments and the pin assignments are matched correctly.

Power LED and Speaker Header
(7-pin SPK_PLED1) (see p.6, No. 11)

Please connect the chassis power LED and the chassis speaker to this header.

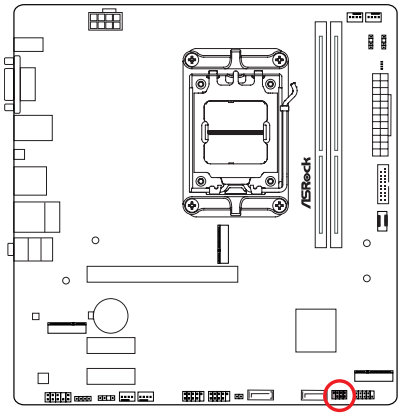

SPK_PLED1

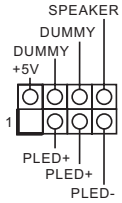

Serial ATA3 Connectors
Vertical:
(SATA3_1) (see p.6, No. 13)
(SATA3_2) (see p.6, No. 12)
These two SATA3 connectors support SATA data cables for internal storage devices with up to 6.0 Gb/s data transfer rate.

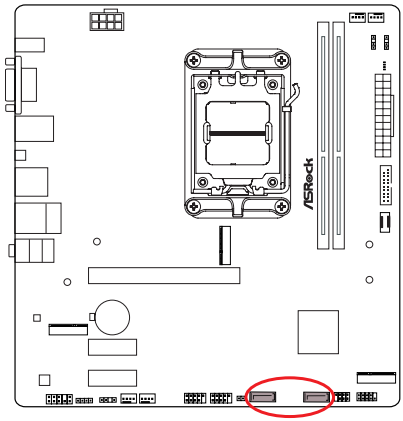



English

USB 2.0 Headers

(9-pin USB_5_6) (see p.6, No. 16)

(9-pin USB_7_8) (see p.6, No. 15)

There are two headers on this motherboard. Each USB 2.0 header can support two ports.

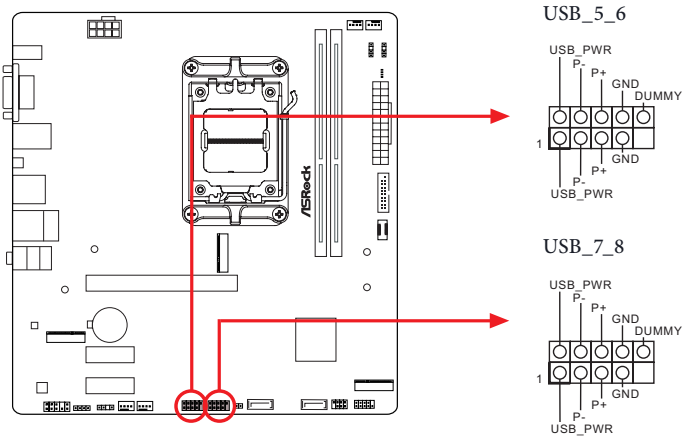

USB 3.2 Gen1 Header

(19-pin USB32_5_6) (see p.6, No. 8)

There is one header on this motherboard. This USB 3.2 Gen1 header can support two ports.

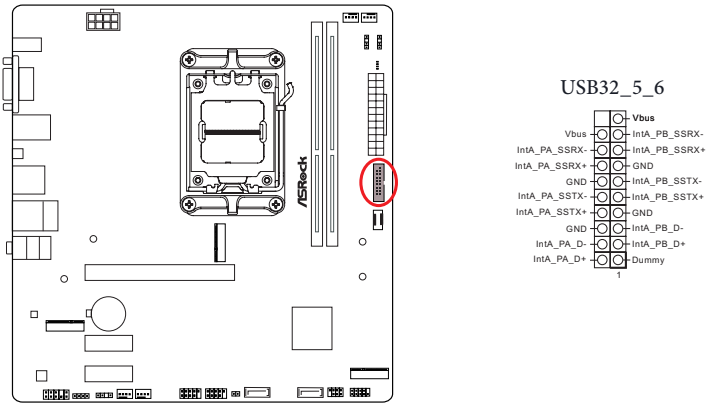

English

Front Panel Type C USB 3.2 Gen1 Header
(20-pin USB32_TC_1) (see p.6, No. 9)

There is one Front Panel Type C USB 3.2 Gen1 Header on this motherboard. This header is used for connecting a USB 3.2 Gen1 module for additional USB 3.2 Gen1 ports.

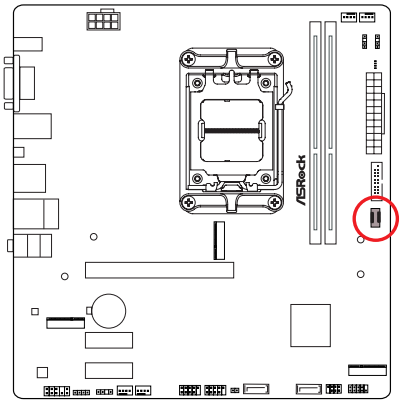

USB32_TC_1

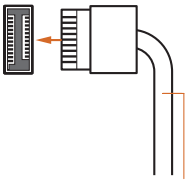

USB Type-C Cable

Front Panel Audio Header
(9-pin HD_AUDIO1) (see p.6, No. 21)

This header is for connecting audio devices to the front audio panel.

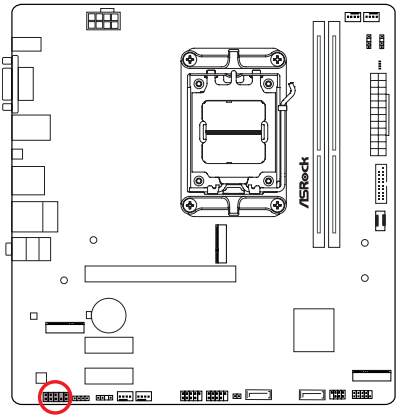

HD_AUDIO1

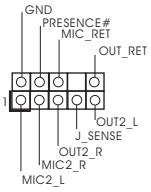

High Definition Audio supports Jack Sensing, but the panel wire on the chassis must support HDA to function correctly. Please follow the instructions in our manual and chassis manual to install your system.

English

Chassis Fan Connectors
(4-pin CHA_FAN1) (see p.6, No. 4)
(4-pin CHA_FAN2) (see p.6, No. 17)
(4-pin CHA_FAN3) (see p.6, No. 18)

These headers allow you to connect Case or Radiator fans. If you plan to connect a 3-pin fan, please connect it to Pin 1-3.

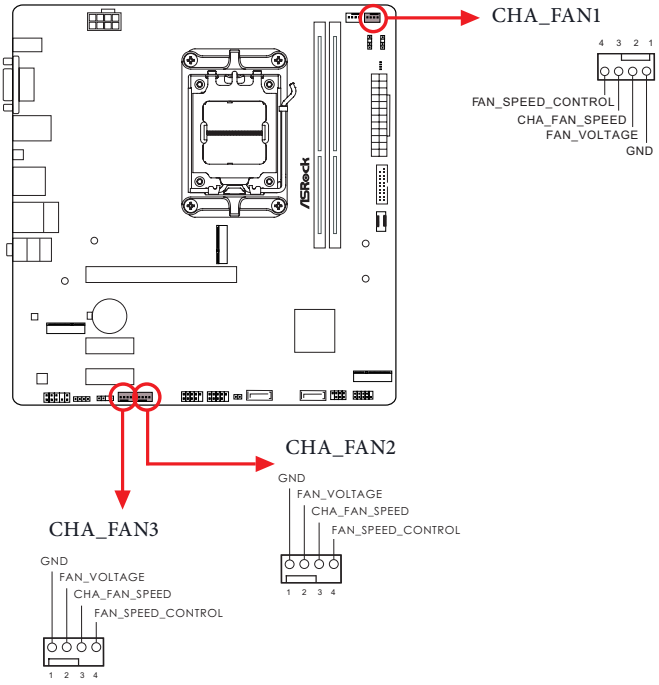

CPU Fan Connector
(4-pin CPU_FAN1) (see p.6, No. 3)

This header allows you to connect CPU fan. If you plan to connect a 3-pin fan, please connect it to Pin 1-3.

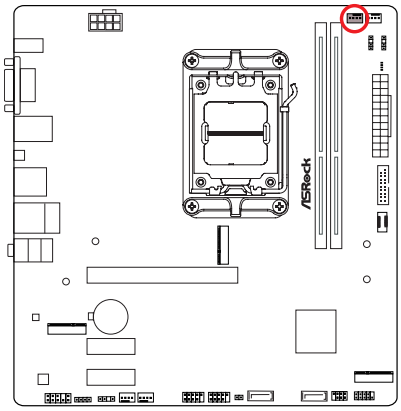

CPU_FAN1

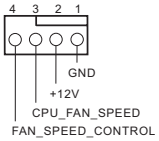

ATX Power Connector
(24-pin ATXPWR1) (see p.6, No. 7)

This motherboard provides a 24-pin ATX power connector. To use a 20-pin ATX power supply, please plug it along Pin 1 and Pin 13.

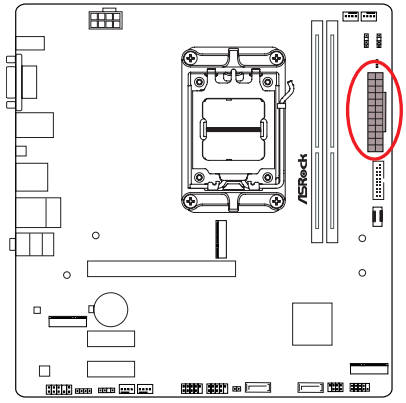

ATXPWR1

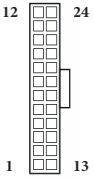

English

ATX 12V Power Connector
(8-pin ATX12V1) (see p.6, No. 1)

This motherboard provides a 8-pin ATX 12V power connector. To use a 4-pin ATX power supply, please plug it along Pin 1 and Pin 5.

***Warning: Please make sure that the power cable connected is for the CPU and not the graphics card. Do not plug the PCIe power cable to this connector.**

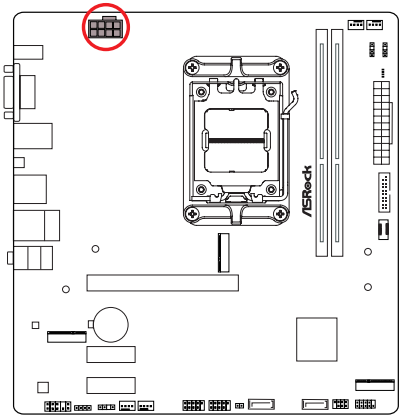

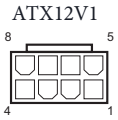

RGB LED Header

(4-pin RGB_LED1) (see p.6, No. 20)

This RGB header is used to connect RGB LED extension cable which allow users to choose from various LED lighting effects.

Caution: Never install the RGB LED cable in the wrong orientation; otherwise, the cable may be damaged.

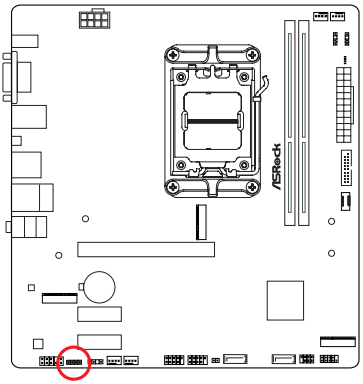

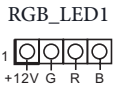

Connect your RGB LED strip to the **RGB LED Header (RGB_LED1)** on the motherboard.

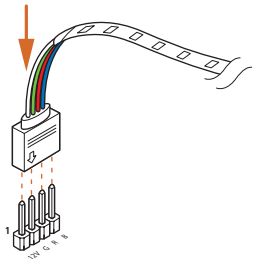

1. *Never install the RGB LED cable in the wrong orientation; otherwise, the cable may be damaged.*
2. *Before installing or removing your RGB LED cable, please power off your system and unplug the power cord from the power supply. Failure to do so may cause damages to motherboard components.*

1. *Please note that the RGB LED strip does not come with the package.*
2. *The RGB LED header supports standard 5050 RGB LED strip (12V/G/R/B), with a maximum power rating of 3A (12V) and length within 2 meters.*

English

Addressable LED Headers
(3-pin ADDR_LED1) (see p.6, No. 5)
(3-pin ADDR_LED2) (see p.6, No. 6)
(3-pin ADDR_LED3) (see p.6, No. 19)
These headers are used to connect Addressable LED extension cables which allow users to choose from various LED lighting effects.
Caution: Never install the Addressable LED cable in the wrong orientation; otherwise, the cable may be damaged.

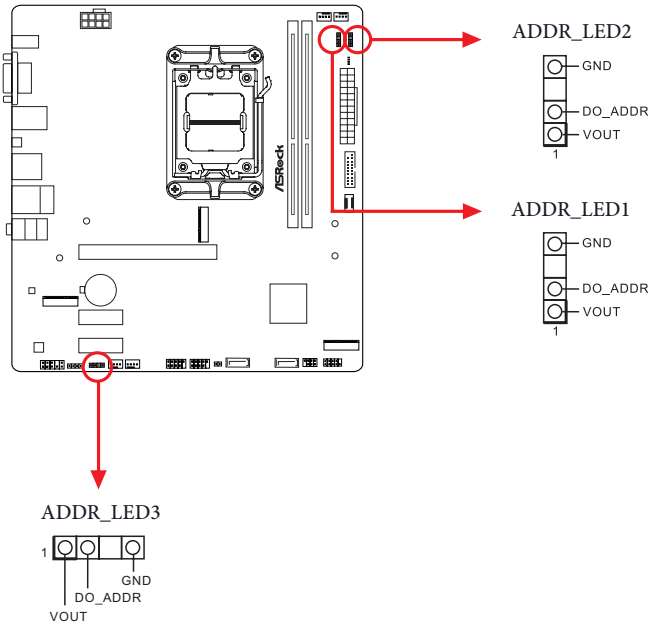

Connect your Addressable RGB LED strips to the **Addressable LED Headers (ADDR_LED1 / ADDR_LED2 / ADDR_LED3)** on the motherboard.

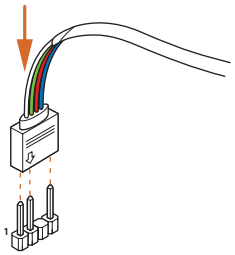

English

1. *Never install the Addressable LED cable in the wrong orientation; otherwise, the cable may be damaged.*
2. *Before installing or removing your Addressable LED cable, please power off your system and unplug the power cord from the power supply. Failure to do so may cause damages to motherboard components.*

1. *Please note that the Addressable LED strips do not come with the package.*
2. *The Addressable LED header supports WS2812B addressable RGB LED strip (5V/ Data/GND), with a maximum power rating of 3A (5V) and length within 2 meters.*

2.14 Smart Button

The motherboard has one smart button: BIOS Flashback Button, allowing users to flash the BIOS.

BIOS Flashback Button
(BIOS_FB1) (see p.8, No. 8)
BIOS Flashback Button allows users to flash the BIOS.

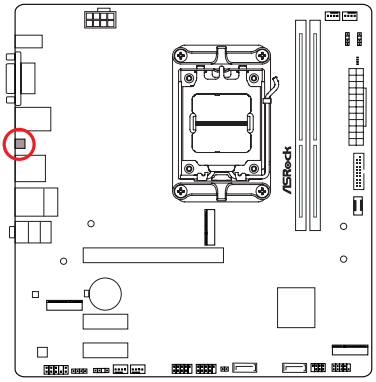

BIOS_FB1



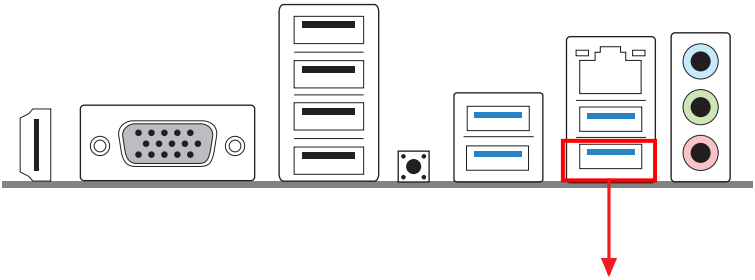

USB BIOS Flashback port

This motherboard is equipped with AMD USB BIOS Flashback feature that allows you to update BIOS without powering on the system.

Before using the BIOS Flashback function, please suspend BitLocker and any encryption or security relying on the TPM. Make sure that you have already stored and backup-ed the recovery key. If the recovery key is missing while encryption is active, the data will stay encrypted and the system will not boot into the operating system. It is recommended to disable fTPM before updating the BIOS. Otherwise an unpredictable failure may occur.

USB Drive Requirements

The USB drive that is used for the BIOS update feature should meet the following requirements:

- USB 2.0 only
- Capacity up to 32GB
- Must be formatted as FAT16 or FAT32.

Root Directory Files

In the root directory there are two required files:

- BIOSUBU.BIN (required)
- PSPBIOS.IMG (required)

To use the USB BIOS Flashback function, please follow the steps below.

1. Download the latest BIOS file and BIOSUBU.BIN file from ASRock's website: http://www.asrock.com.
2. Copy the BIOS file to your USB flash drive. Please make sure the file system of your USB flash drive must be formatted as FAT16 or FAT32.
3. Extract BIOS file from the zip file.
4. Rename the file to "**PSPBIOS.IMG**". Save it and BIOSUBU.BIN file to the root directory of X: USB flash drive.
5. Install the CPU, CPU fan and DRAM on the motherboard. It is recommended to install the CPU fan to CPU_FAN1 connector. Plug the 8-pin ATX 12V power connector and 24-pin ATX power connector to the motherboard. Then turn on the power supply's AC switch.
   *There is no need to power on the system.
6. Then plug your USB drive to the USB BIOS Flashback port.
7. Press the BIOS Flashback Switch for about three seconds. Then the system starts BIOS flashing automatically and the LED starts to blink.
8. Wait until the LED stops blinking, indicating that BIOS flashing has been completed. This takes around 2 and a half minutes. Then the system restarts and enter BIOS.

*If the LED light turns solid green, this means that the BIOS Flashback is not operating properly. Please turn off the power supply's AC switch to disconnect power for several minutes, and turn it on again.

**If the LED does not light up at all, this means that the BIOS Flashback does not work. Please turn off the power supply's AC switch to disconnect power for several minutes, and turn it on again.

2.15 Post Status Checker

Post Status Checker (PSC) diagnoses the computer when users power on the machine. The LEDs light up to show what component is running into an issue. They emit red, yellow, white and yellow-green lights to indicate, respectively, the CPU, memory, VGA and storage are not detected or fail. They will remain lit until the issue is fixed. The lights go off if the four mentioned above are functioning normally.

Component	LED Indicator	Status
CPU	Solid Red	indicates CPU is dysfunctional.
DRAM	Solid Yellow	indicates DRAM is dysfunctional.
VGA	Solid White	indicates GPU is dysfunctional.
BOOT	Solid Yellow-Green	indicates boot device is dysfunctional.

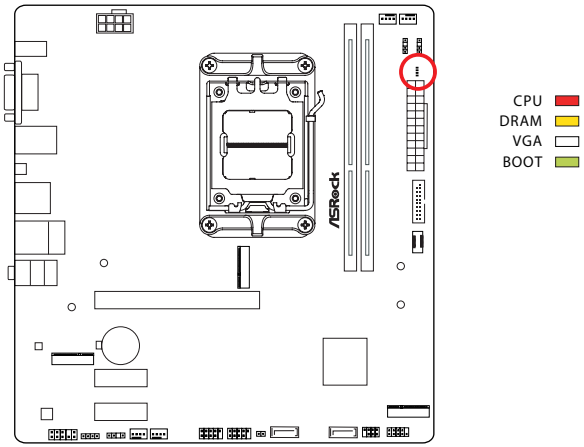

It is normal for the DRAM status LED to blink during memory training. This indicates the system is working properly.

Tutorial Video

2.16 M.2 2230 WiFi/BT PCIe WiFi module Installatio Guide

The M.2 is a small size and versatile card edge connector that aims to replace mPCIe and mSATA. The M.2 Socket (Key E) supports type 2230 WiFi/BT PCIe WiFi module.
* The M.2 socket does not support SATA M.2 SSDs.

Installing the 2230 WiFi/BT PCIe WiFi module

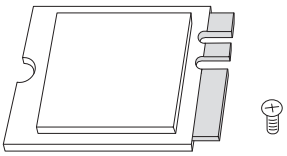

Step 1

Prepare a type 2230 WiFi/BT PCIe WiFi module and the screw.

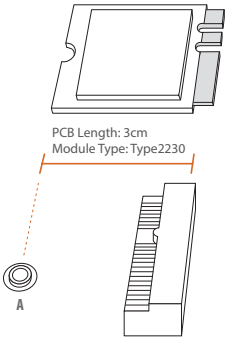

Step 2

Find the nut location to be used.

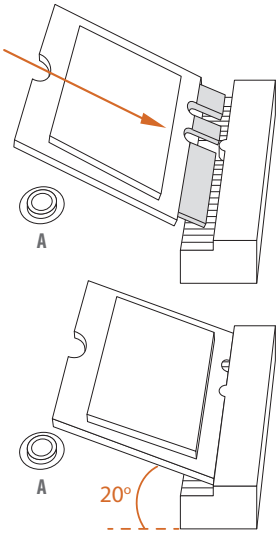

Step 3

Align and gently insert the 2230 WiFi/BT PCIe WiFi module into the M.2 slot. Please be aware that the module only fits in one orientation.

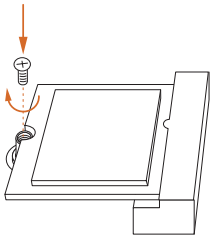

Step 4

Tighten the screw with a screwdriver to secure the module into place. Please do not overtighten the screw as this might damage the module.

2.17 M.2 SSD Installation Guide (M2_1)

The M.2 is a small size and versatile card edge connector that aims to replace mPCIe and mSATA. The Hyper M.2 Socket (M2_1, Key M) supports type 2280 PCIe Gen4x4 (64 Gb/s) mode.

Installing the M.2 SSD

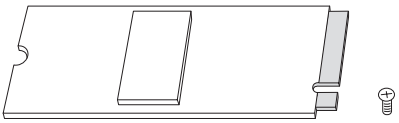

Step 1

Prepare a M.2 SSD and the screw.

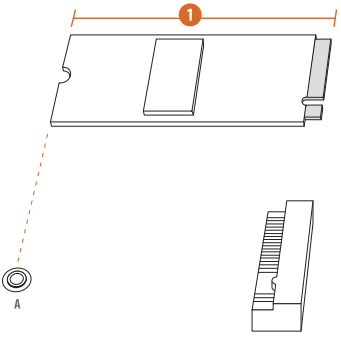

Step 2

Depending on the PCB type and length of your M.2 SSD, find the corresponding nut location to be used.

No.	1
Nut Location	A
PCB Length	8cm
Module Type	Type 2280

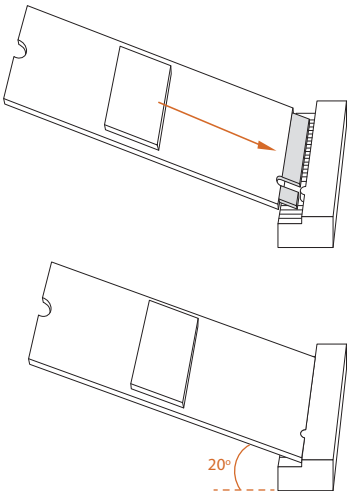

Step 3

Align and gently insert the M.2 SSD into the M.2 slot. Please be aware that the M.2 SSD only fits in one orientation.

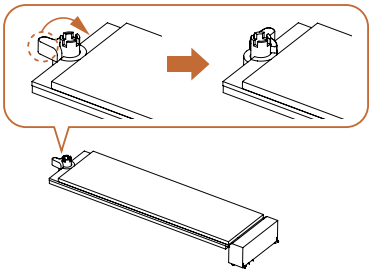

Step 4

Ensure that the notch at the end of the M.2 SSD aligns with the nut. Then secure the M.2 SSD by turning the nut lock clockwise to its locked position.

For the latest updates of M.2 SSD support list, please visit our website for details: http://www.asrock.com

2.18 M.2 SSD Installation Guide (M2_2)

The M.2 is a small size and versatile card edge connector that aims to replace mPCIe and mSATA. The Ultra M.2 Socket (M2_2, Key M) supports type 2260/2280 SATA3 6.0 Gb/s & PCIe Gen3x4 (32 Gb/s) modes.

Installing the M.2 SSD

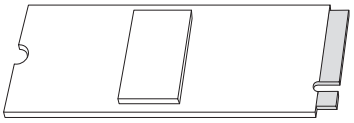

Step 1

Prepare a M.2 SSD and the screw.

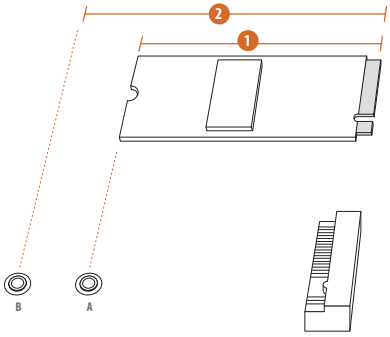

Step 2

Depending on the PCB type and length of your M.2 SSD, find the corresponding nut location to be used.

No.	1	2
Nut Location	A	B
PCB Length	6cm	8cm
Module Type	Type2260	Type 2280

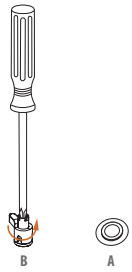

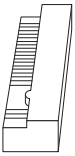

Step 3

Use a screwsriver to remove the standoff.
Skip Step 3 if your M.2 SSD is Type 2280.

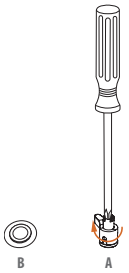

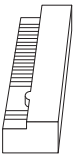

Step 4

Peel off the yellow protective film on the nut to be used. Tighten the standoff into the desired nut location on the motherboard with a screwdriver.
Skip Step 4 if your M.2 SSD is Type 2280.

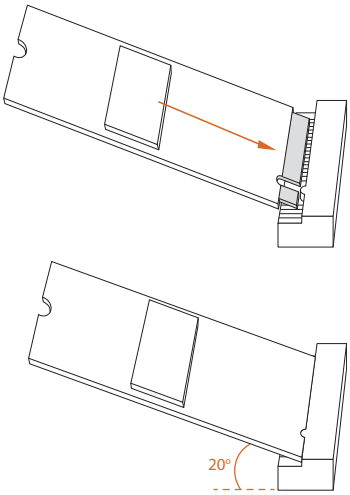

Step 5

Align and gently insert the M.2 SSD into the M.2 slot. Please be aware that the M.2 SSD only fits in one orientation.

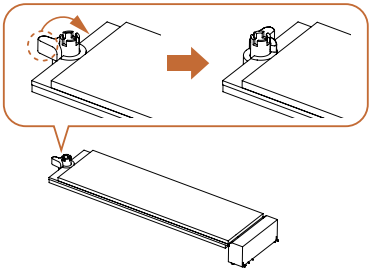

Step 6

Ensure that the notch at the end of the M.2 SSD aligns with the nut. Then secure the M.2 SSD by turning the nut lock clockwise to its locked position.

For the latest updates of M.2 SSD support list, please visit our website for details: http://www.asrock.com

Version 1.0
Published February 2025

Copyright©2025 ASRock INC. All rights reserved.

Copyright Notice:

No part of this documentation may be reproduced, transcribed, transmitted, or translated in any language, in any form or by any means, except duplication of documentation by the purchaser for backup purpose, without written consent of ASRock Inc.

Products and corporate names appearing in this documentation may or may not be registered trademarks or copyrights of their respective companies, and are used only for identification or explanation and to the owners' benefit, without intent to infringe.

Disclaimer:

Specifications and information contained in this documentation are furnished for informational use only and subject to change without notice, and should not be constructed as a commitment by ASRock. ASRock assumes no responsibility for any errors or omissions that may appear in this documentation.

To the extent permitted by law, with respect to the contents of this documentation, ASRock does not provide warranty of any kind, either expressed or implied, including but not limited to the implied warranties or conditions of merchantability or fitness for a particular purpose. In no event shall ASRock, its directors, officers, employees, or agents be liable for any indirect, special, incidental, or consequential damages (including damages for loss of profits, loss of business, loss of data, interruption of business and the like), even if ASRock has been advised of the possibility of such damages arising from any defect or error in the documentation or product.

FCC Compliance Statement

This device complies with Part 15 of the FCC Rules. Operation is subject to the following two conditions:

(1) this device may not cause harmful interference, and

(2) this device must accept any interference received, including interference that may cause undesired operation.

This equipment has been tested and found to comply with the limits for a Class B digital device, pursuant to part 15 of the FCC Rules. These limits are designed to provide reasonable protection against harmful interference in a residential installation. This equipment generates, uses and can radiate radio frequency energy and, if not installed and used in accordance with the instructions, may cause harmful interference to radio communications. However, there is no guarantee that interference will not occur in a particular installation. If this equipment does cause harmful interference to radio or television reception, which can be determined by turning the equipment off and on, the user is encouraged to try to correct the interference by one or more of the following measures:

- Reorient or relocate the receiving antenna.
- Increase the separation between the equipment and receiver.
- Connect the equipment into an outlet on a circuit different from that to which the receiver is connected.
- Consult the dealer or an experienced radio/TV technician for help.

Button Battery Safety Notice

⚠WARNING

- **INGESTION HAZARD:** This product contains a button cell or coin battery.
- **DEATH** or serious injury can occur if ingested.
- A swallowed button cell or coin battery can cause **Internal Chemical Burns** in as little as **2 hours**.
- **KEEP** new and used batteries **OUT OF REACH of CHILDREN**
- **Seek immediate medical attention** if a battery is suspected to be swallowed or inserted inside any part of the body.



- Remove and immediately recycle or dispose of used batteries according to local regulations and keep away from children. Do NOT dispose of batteries in household trash or incinerate.
- Even used batteries may cause severe injury or death.
- Call a local poison control center for treatment information.
- Battery type: CR2032
- Battery voltage: 3V
- Non-rechargeable batteries are not to be recharged.
- Do not force discharge, recharge, disassemble, heat above (manufacturer's specified temperature rating) or incinerate. Doing so may result in injury due to venting, leakage or explosion resulting in chemical burns.
- This product contains an irreplaceable battery.
- This icon indicates that a swallowed button battery can cause serious injury or death. Please keep batteries out of sight or reach of children.

CALIFORNIA, USA ONLY

The Lithium battery adopted on this motherboard contains Perchlorate, a toxic substance controlled in Perchlorate Best Management Practices (BMP) regulations passed by the California Legislature. When you discard the Lithium battery in California, USA, please follow the related regulations in advance.

"Perchlorate Material-special handling may apply, see www.dtsc.ca.gov/hazardouswaste/perchlorate"

CALIFORNIA, USA ONLY



WARNING: Cancer and Reproductive Harm
www.P65Warnings.ca.gov

CE Conformity

CE

ASRock INC. hereby declares that this device is in compliance with the essential requirements and other relevant provisions of related Directives. Full text of EU declaration of conformity is available at: http://www.asrock.com

ASRock follows the green design concept to design and manufacture our products, and makes sure that each stage of the product life cycle of ASRock product is in line with global environmental regulations. In addition, ASRock disclose the relevant information based on regulation requirements.

Please refer to https://www.asrock.com/general/about.asp?cat=Responsibility for information disclosure based on regulation requirements ASRock is complied with.

UKCA Conformity

UK
CA

ASRock INC. hereby declares that this device is in compliance with the essential requirements and other relevant provisions of related UKCA Directives. Full text of UKCA declaration of conformity is available at: http://www.asrock.com

Consumer Limited Warranty - Australia

Our goods come with guarantees that cannot be excluded under the Australian Consumer Law. You are entitled to a replacement or refund for a major failure and compensation for any other reasonably foreseeable loss or damage caused by our goods. You are also entitled to have the goods repaired or replaced if the goods fail to be of acceptable quality and the failure does not amount to a major failure. If you require assistance please call ASRock Tel : +886-2-28965588 ext.123 (Standard International call charges apply)



WARNING

THIS PRODUCT CONTAINS A BUTTOON BATTERY
If swallowed, a button battery can cause serious injury or death.
Please keep batteries out of sight or reach of children.

Proper Disposal



DO NOT throw the motherboard in municipal waste. This product has been designed to enable proper reuse of parts and recycling. This symbol of the crossed out wheeled bin indicates that the product (electrical and electronic equipment) should not be placed in municipal waste. Check local regulations for disposal of electronic products.

Class B ITE

この装置は、クラスB情報技術装置です。この装置は、家庭環境で使用することを目的としていますが、この装置がラジオやテレビジョン受信機に近接して使用されると、受信障害を引き起こすことがあります。取扱説明書に従って正しい取り扱いをして下さい。

Trademark Information

The terms HDMI® and HDMI High-Definition Multimedia Interface, and the HDMI logo are trademarks or registered trademarks of HDMI Licensing LLC in the United States and other countries.

HDMI®
HIGH-DEFINITION MULTIMEDIA INTERFACE

European Community Radio Equipment Directive Compliance Statement

This device complies with directive 2014/53/EU issued by the Commision of the European Community. This equipment complies with EU radiation exposure limits set forth for an uncontrolled environment.

This equipment should be installed and operated with minimum distance 20cm between the radiator & your body.

Operations in the 5.15-5.35/6GHz band are restricted to indoor usage only.

	AT	BE	BG	CH	CY	CZ	DE
	DK	EE	EL	ES	FI	FR	HR
	HU	IE	IS	IT	LI	LT	LU
	LV	MT	NL	NO	PL	PT	RO
	SE	SI	SK	TR			

CE

Radio Frequency Bands and Maximum Power Levels

- Features : Wi-Fi 6E, BT
- Frequency Range : 2.4 GHz: 2400-2485MHz; 5 GHz: 5150-5350MHz, 5470-5725MHz, 5725-5850MHz; 6 GHz: 5955-6415MHz
- Max Power Level : 2.4 GHz: 20dBm; 5 GHz: 23dBm; 6 GHz: 23dBm

Compliance Statement of Innovation, Science and Economic Development Canada (ISED)

This device complies with with Innovation, Science and Economic Development Canada's licence-exempt RSS(s). Operation is subject to the following two conditions: (1) this device may not cause interference, and (2) this device must accept any interference, including interference that may cause undesired operation of the device. Operation in the band 5150-5250 MHz is only for indoor use to reduce the potential for harmful interference to co-channel mobile satellite systems. CAN ICES-003(B)/NMB-003(B)

NCC 無線設備警告聲明

經型式認證合格之低功率射頻電機，非經許可，公司、商號或使用者均不得擅自變更頻率、加大功率或變更原設計之特性及功能。 低功率射頻電機之使用不得影響飛航安全及干擾合法通信；經發現有干擾現象時，應立即停用，並改善至無干擾時方得繼續使用。前項合法通信，指依電信法規定作業之無線電通信。低功率射頻電機須忍受合法通信或工業、科學及醫療用電波輻射性電機設備之干擾。

BSMI 限用物質及元素清單

單元	限用物質及其化學符號					
	鉛 (Pb)	鎘 (Cd)	汞 (Hg)	六價鉻 (Cr^{+6})	多溴聯苯 (PBB)	多溴聯苯醚 (PBDE)
電路板	O	O	O	O	O	O
電子元件	-	O	O	O	O	O
線材	-	O	O	O	O	O
配件	-	O	O	O	O	O

備考 1.〝超出 0.1 wt %〞及〝超出 0.01 wt %〞係指限用物質之百分比含量超出百分比含量基準值。
備考 2.〝〇〞係指該項限用物質之百分比含量未超出百分比含量基準值。
備考 3.〝－〞係指該項限用物質為排除項目。

China RoHS

电子信息产品污染控制标示

依据中国发布的「电子信息产品污染控制管理办法」及 SJ/T 11364-2014「电子信息产品污染控制标示要求」，电子信息产品应进行标示，藉以向消费者揭露产品中含有的有毒有害物质或元素不致发生外泄或突变从而对环境造成污染或对人身、财产造成严重损害的期限。依上述规定，您可于本产品之印刷电路板上看见图一之标示。图一中之数字为产品之环保使用期限。由此可知此主板之环保使用期限为 10 年。



图一

有毒有害物质或元素的名称及含量说明

若您欲了解此产品的有毒有害物质或元素的名称及含量说明，请参照以下表格及说明。

部件名称	有害物质或元素					
	铅 (Pb)	镉 (Cd)	汞 (Hg)	六价铬 (Cr(VI))	多溴联苯 (PBB)	多溴二苯醚 (PBDE)
印刷电路板及电子组件	X	O	O	O	O	O
外部信号连接头及线材	X	O	O	O	O	O

以上表格依据 SJ/T 11364-2014 的规定编制。
O: 表示该有害物质在该部件所有均质材料中的含量均在 GB/T 26572 规定的限量要求以下。
X: 表示该有害物质至少在该部件的某一均质材料中的含量超出 GB/T 26572 规定的限量要求。
备注：此产品所标示之环保使用年限，系指在一般正常使用状况下。