铭瑄 | 竞无止境

铭瑄主板产品说明书

MS-iCraft B850 AIGA

铭瑄中国官网:https://www.maxsun.com.cn
铭瑄全球官网:https://www.maxsun.com
广州商科信息科技有限公司保留所有权利

铭瑄 | 竞无止境

目录

质保条款 4
声明 5
安全信息 6
常见问题&温馨提示 7
产品示意图 8
包装配件 8
产品规格 9
接口示意图 11
分布式Debug 12
快速指南 13
接口安装指引 14
- AMD AM5 LGA1718 处理器安装 14
- LGA1718 CPU散热器安装 14
- DDR4 / DDR5_DIMM 内存安装 14
- 24 Pin ATX 电源连接器安装 15
- CPU 8Pin +12V 电源连接器安装 15
- CPU 4 Pin +12V 电源连接器安装 15
- PCIe X16 插槽安装 16
- PCIe X4 插槽安装 16
- PCIe X1 插槽安装 16
- M.2 (Key_M) 插槽安装 17
- 4 Pin PUMP 接针安装 17
- 4 Pin 机箱风扇接针安装 17
- USB Type-C® 前置接口安装 18
- USB 3.2 Gen1 前置接针 (19Pin) 安装 18
- USB 2.0 前置接针 (9Pin) 安装 18
- 3 Pin ARGB 接针安装 19
- 4 Pin ARGB 接针安装 19
- SATA 接口安装 19
- SFF-8654 4i 接口安装 20
- 10-1 Pin F_PANEL 系统面板接针安装 20
- F_AUDIO 前面板音频接针安装 20

后置 I/O 接口指引 21
USB 2.0 Type-A 接口 21
USB 3.2 Type-A 接口 21
P/S2 接口 21
USB Type-C® 接口 21
HDMI™ 接口 21
DisplayPort 接口 21
RJ45 LAN 端口 21
Wi-Fi天线接口（外螺内针） 22
5.1 声道音频接口 22
7.1 声道音频接口 22
BIOS 指引 23

尊敬的用户:

您好，感谢您购买和使用铭瑄产品，您在使用铭瑄主板的过程中遇到任何疑问，请致电铭瑄产品当地的技术支持中心，或致电商科(400-696-0606)享受产品的售后服务。

商科按照国家质量监督检验“三包”服务的相关责任规定，向您提供三年质保的优质服务承诺。详细条例见下文件。

一：三年保修服务

自销售后的第一年至第三年内，您在正常使用该产品的情况下，如果出现《微型计算机商品性能故障表》所列质量的问题时，并且属于正常质保范围内的产品，最终销售者应当按“三包”相关规定为您提供相应的服务。

如果遇到产品的损坏元器件已停产，而市场上也无法找到相应元器件，商科将与您共同协商折旧补差价换其它产品(不良品按:“三包”规定比例折旧)。

二：不在保修服务之内的情况

出现以下情况，将无法提供“三包”服务;

1.无故障的主板;

2.超出质保期的主板;

3.由于使用不当，出现诸如主板组件、插件缺少，PCB板变形，线路　严重划伤、氧化锈蚀，主要器件烧毁等物理损伤的主板;

4.“条形码”被涂改、丢失、移动或损坏的主板;

5.由于人为疏忽或错误使用或因不可抗拒的外力造成损坏的主板，如:　　浸水、火灾、雷击及其它机械破坏等导致的主板损坏:未按说明书规　定使用而造成主板损坏等;

6.由于您在将故障件送修的过程中由于包装或运输操作不当造成损坏　的主板;

7.由于您或第三方私自试图尝试拆装或更换组件器件(如散热片、等)而　　造成无法复原的主板;

注:

1、未尽事宜见国家“三包规定”

2、本公司保留对于铭瑄主板故障原因进行鉴别的权力以及对上述条款的最终解释权

产品中有害物质的名称及含量

部件名称	有害物质					
	铅 (Pb)	汞 (Hg)	镉 (Cd)	六价铬 (Cr(VI))	多溴联苯 (PBB)	多溴二苯醚 (PBDE)
主机板	×	○	○	○	○	○
附件	○	○	○	○	○	○

本表格依据 SJ/T 11364 的规定编制。

○：表示该有害物质在该部件所有均质材料中的含量均在 GB/T 26572 规定的限量要求以下。

×：表示该有害物质至少在该部件的某一均质材料中的含量超出 GB/T 26572 规定的限量要求。

CB

10

声明:

版权声明:说明书版权归铭瑄科技主板(简称:铭瑄主板)所有。铭瑄主板有权在不知会用户的前提下增益、删除内容。本说明书为纯技术文档，无任何暗示及映射第三方内容。且不承担因印刷及排版错误而导致的任何歧义。本说明书中所涉及之任何第三方之注册商标，所有权归其制造商或品牌供应商所有。
Copyright'1999--2024版权所有、未经授权，禁止以任何方式复制传播。

关于本手册:本说明书适合初学者，包含相关产品特性介绍及软体安装介绍，以及一些名词的解释。本说明书可以作为技术性参考资料，用户使用时请以实物为准。

非正常保修范围:

1、产品因不当使用与安装，自行拆解或更换零件，或是任意变更规格所造成的故障与损坏，不在保修范围内。
2、产品一经变更或修改，以及任何因间接、特殊或意外情况所造成的损害，不在保修范围内。

避免在下列环境中使用本产品:高温、低气压、低温、潮湿、多尘、磁场强大及长期暴露于阳光之下。本公司建议您在海拔 3000 米以下，0°至 35°°C，湿度为 5%至 95%的环境中使用。

FCC条款:本装置完全遵循FCC条款第 15部分的规定。遵照下列两项条件来作业:
1、本装置不会造成人身伤害;
2、本装置必须能接受任何已回复的冲突干扰，包括可能会造成不当操作的冲突。

注意:依照 FCC条款第 15 部分规定，本装置已经通过测试并且符合 ClassB数位装置的限制。这项限制是为了安装过程中可能造成的伤害性冲突的合理防范措施。本装置产生、使用、并且可以发射无线电的频率能量，但如果没有依照制造商的指示安装和使用，可能会与通讯工具造成伤害性冲突。然而，并不保证在特定的安装下不会产生任何冲突。
如果关闭和重开本装置后，仍确定本装置真的造成收音机或电视机的冲突，请使用者利用下列一项或多项知识来更正所造成的冲突:

- 重新安装接收天线;
- 增加装置与受讯器间的分隔;
- 将电脑插入不同的插座以便于两个装置使用不同的回路;
- 如果有需要，使用者可以与经销商或更有经验的广播/电视技师联系,获得额外的资讯

警告:为了遵照发射物的限制，请务必使用保护性界面排线。未经明确同意，使用者不可对本装置做任何改变或修改。

CSC条款:根据加拿大通讯部所制定的无线电干扰条例(RadioInterference Regulation)，本装置的杂音发射物不超过 Class B 的限制。

安全信息:

- 此包装中包含的的组件有可能受到静电放电 (ESD) 损坏。请遵守以下注意事项，以确保成功组装计算机。
- 确保所有组件连接牢固。若连接不紧可能会导致计算机无法识别组件或无法开启。
- 拿起主板时请手持主板边缘，避免触及主板的敏感组件。
- 当拿取主板时，建议佩戴静电放电 (ESD) 腕带，以防止静电损坏其配置。如果 ESD 腕带无法使用，请在拿取主板前通过接触其它金属物体释放自身的静电。
- 在不安装主板时，请将主板放在静电屏蔽容器或防静电垫上。
- 在打开计算机前，确保计算机机箱内的主板或任何位置上没有松动的螺丝或金属组件。
- 在安装完成之前不要启动计算机。否则可能会导致组件永久性损坏以及伤害使用者。
- 在任何安装步骤中，如果您需要帮助，请咨询专业的计算机技术员。
- 安装或拆卸计算机任何组件之前，请先关闭电源，并将电源线由插座上拔除。
- 保留本用户指南以供将来参考。
- 本主板须远离湿气。
- 在电源供应器连接到电源插座之前，请确保您的插座提供了电源供应器上额定相同的 指示电压。
- 将电源线摆放在不会被人踩到的地方，不要在电源线上放置任何物品。
- 须留意在主板上所有的警告标示。
- 发生下列任一状况时，请将本主板交由维修人员检查：
    - 有液体渗透至计算机内。有液体渗透至计算机内。
    - 主板曝露于水气当中。
    - 主板不工作，或您依照使用指南后仍无法让本主板工作。
    - 主板曾掉落且损坏。
    - 主板有明显的破损痕迹。
- 切勿将主板放置于摄氏 60 度 (华氏 140 度) 以上的环境中，以免主板损坏。

常见问题&温馨提示

内存插槽安装

双内存插槽主板：安装内存时，使用单根或双根内存请优先使用 A1/B1 插槽。
四内存插槽主板：安装内存时，使用单根或双根内存请优先使用 A2/B2 插槽。

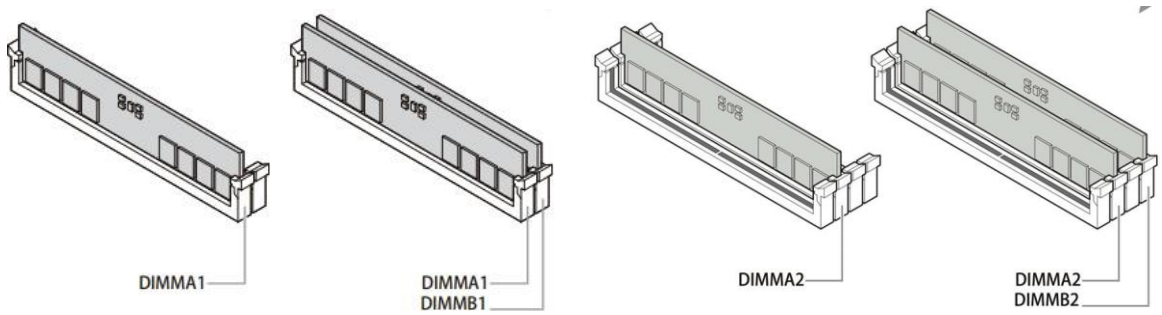

开机显示器无显示 / 开机卡 VGA Debug 灯 / 开机 QR Code 码显示 d6

请检查所使用显卡是否支持 UEFI 启动模式，如不支持，请更换支持 UEFI 启动模式的显卡。



开机 / 重启 / 安装系统后直接进入BIOS 无法进入系统

请检查所安装系统是否为 UEFI 启动格式（需要硬盘分区表为 GPT 格式），若不是，请重新安装 UEFI 启动格式系统。

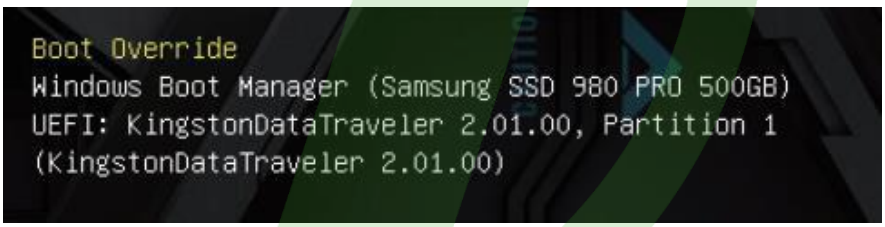





产品包装

主板产品	MS-iCraft B850 AIGA 主板
数据线	2 x SATA 6Gb/s 数据线
其他配件	1 x 4合1螺丝刀
	1 x 瑷珈亚克力立牌
	1 x 瑷珈Q版贴纸
	1 x M.2 SSD螺丝包
	1 x 磁吸式Wi-Fi增益天线
	1 x 产品质保卡

规格

铭瑄 | 竞无止境

产品型号名	MS-iCraft B850 AIGA
产品尺寸	ATX版型 305mm x 245mm
中央处理器	AMD AM5 插槽，适用于 AMD Ryzen™ 9000/8000/7000 系列桌面处理器
芯片组	AMD B850 芯片组
供电	16+2+1相 Dr.Mos 供电 (核心50A)
内存	4 x DIMM DDR5，最大容量 256GB 支持双通道内存架构 支持 AMD Extended Profiles for Overclocking (EXPO) 支持8400(OC)/8200(OC)/ 8000(OC)/7600(OC)/7400(OC)/7200(OC)/7000(OC)/ 6800(OC)/6600(OC)/6400(OC)/6000(OC)/5600(OC)/4800 Mhz内存频率
显示接口	1 x DisplayPort 1.4 显示接口，支持规定的最高 4K@60Hz 1 x HDMI™ 2.0 显示接口，支持规定的最高 4K@60Hz * 不同类型 CPU 的图形规格可能有所不同，详情请参阅 www.AMD.com*
PCIe拓展槽	**来自 AMD Ryzen™ 9000/8000/7000 处理器：** 1 x PCIe X16 插槽 (最高支持 PCIe 5.0 X16/X8 模式) -搭载 AMD Ryzen™ 7000/ 9000 系列处理器时，支持 PCIe 5.0 X16/X8 运行规格； -搭载 AMD Ryzen™ 8000 系列处理器时，支持 PCIe 4.0 X8/X4 运行规格； 1 x PCIe X16 插槽 (最高支持 PCIe 5.0 X8/X4+X4 模式，需PCIeX16_A 插槽开启通道拆分，该插槽激活后，PCIeX16_A 插槽速率变更为 X8 模式) -搭载 AMD Ryzen™ 7000/ 9000 系列处理器时，支持 PCIe 5.0 X8/X4+X4 运行规格； -搭载 AMD Ryzen™ 8000 系列处理器时，该插槽失效； **来自 AMD B850 芯片组 ：** 1 x PCIe X1 插槽 (支持 PCIe 3.0 X1 模式)
存储设备接口	**共支持 4 x M.2 插槽 和 2 x SATA 6Gb/s 接口** **来自 AMD Ryzen™ 9000/8000/7000 处理器：** M.2_A 插槽 (Key_M)：支持 PCIe 5.0 X4/X2 模式，支持 2242 / 2280 /22110 长度 -搭载 AMD Ryzen™ 7000/ 9000 系列处理器时，支持 PCIe 5.0 x4 运行规格； -搭载 AMD Ryzen™ 8000 系列处理器时，支持 PCIe 4.0 x4 运行规格； M.2_B 插槽 (Key_M)：支持 PCIe 5.0 X4/X2 模式，支持 2242 / 2280 /22110 长度 -搭载 AMD Ryzen™ 7000/ 9000 系列处理器时，支持 PCIe 5.0 x4 运行规格； -搭载 AMD Ryzen™ 8000 系列处理器时，支持 PCIe 4.0 x4/x2 运行规格； **来自 AMD B850 芯片组：** M.2_C 插槽 (Key_M)：支持 PCIe 4.0 X4/X2 模式，支持 2242 / 2280 /22110 长度 M.2_D 插槽 (Key_M)：支持 PCIe 4.0 X4/X2 模式，支持 2242 / 2280 /22110 长度 2 x SATA 6Gb/s 接口
网络功能	1 x Realtek RTL8126 5Gb Ethernet 接口 1 x MTK MT7925 无线网卡：支持 Wi-Fi 7 与 Bluetooth® v5.4
音频	Realtek ALC1220 高清音频编解码器

USB接口	**板载USB (共6个接口)：** 1 x USB 20G Type-C® 前置接口 1 x USB 5G 19Pin 接针，支持 2 个额外的 USB 5G 接口 1 x USB 2.0 9Pin 接针，支持 2 个额外的 USB 2.0 接口 1 x USB 2.0 4Pin 接针，支持 1 个额外的 USB 2.0 接口 **后置USB (共9个接口)：** 1 x USB 10G Type-C® 接口(支持 DisplayPort 1.4 规定最高 4K@60Hz 视频输出) 4 x USB 10G Type-A 接口 4 x USB 2.0 Type-A 接口
后置面板I/O设备接口	4 x USB 2.0 Type-A 接口 1 x HDMI™ 2.0 1 x DisplayPort 1.4 1 x CLR_CMOS/BIOS FLASH 功能按钮 1 x USB 10G Type-C® 接口(支持 DisplayPort 1.4 规定最高 4K@60Hz 视频输出) 4 x USB 10G Type-A 接口 1 x Realtek 5Gb Ethernet 接口 1 x Wi-Fi 天线接口 5 x 音频插孔 + 1 x SPDIF 光纤接口
内置I/O设备接口	**电源相关接口** 1 x 24 Pin ATX 电源连接器 2 x 8 Pin +12V 电源连接器 **风扇相关接口** 1 x 4 Pin CPU 风扇接头 1 x 4 Pin PUMP 水泵接头 (支持DC调速) 1 x 4 Pin 内存风扇接头 3 x 4 Pin 机箱风扇接头 **存储相关接口** 4 x M.2 插槽（Key_M） 2 x SATA 6Gb/s 接口 **板载 USB 接口** 1 x USB 20G Type-C® 前置接口 1 x USB 5G 19Pin 接针，支持 2 个额外的 USB 5G 接口 1 x USB 2.0 9Pin 接针，支持 2 个额外的 USB 2.0 接口 1 x USB 2.0 4Pin 接针，支持 1 个额外的 USB 2.0 接口 **其他接口** 3 x 3 Pin ARGB 接口 1 x 4 Pin NRGB 接口 1 x COM 端口接针 1 x 前面板音频接口 1 x 10-1 Pin系统面板接口 1 x CLR_CMOS 重置接针
支持操作系统	Windows® 11，Windows® 10 64-bit
特有功能	分布式 Debug 灯 Maxsun Sync 灯光控制 CLR_CMOS 快捷按钮 BIOS FLASH 功能

接口

铭瑄 | 竞无止境

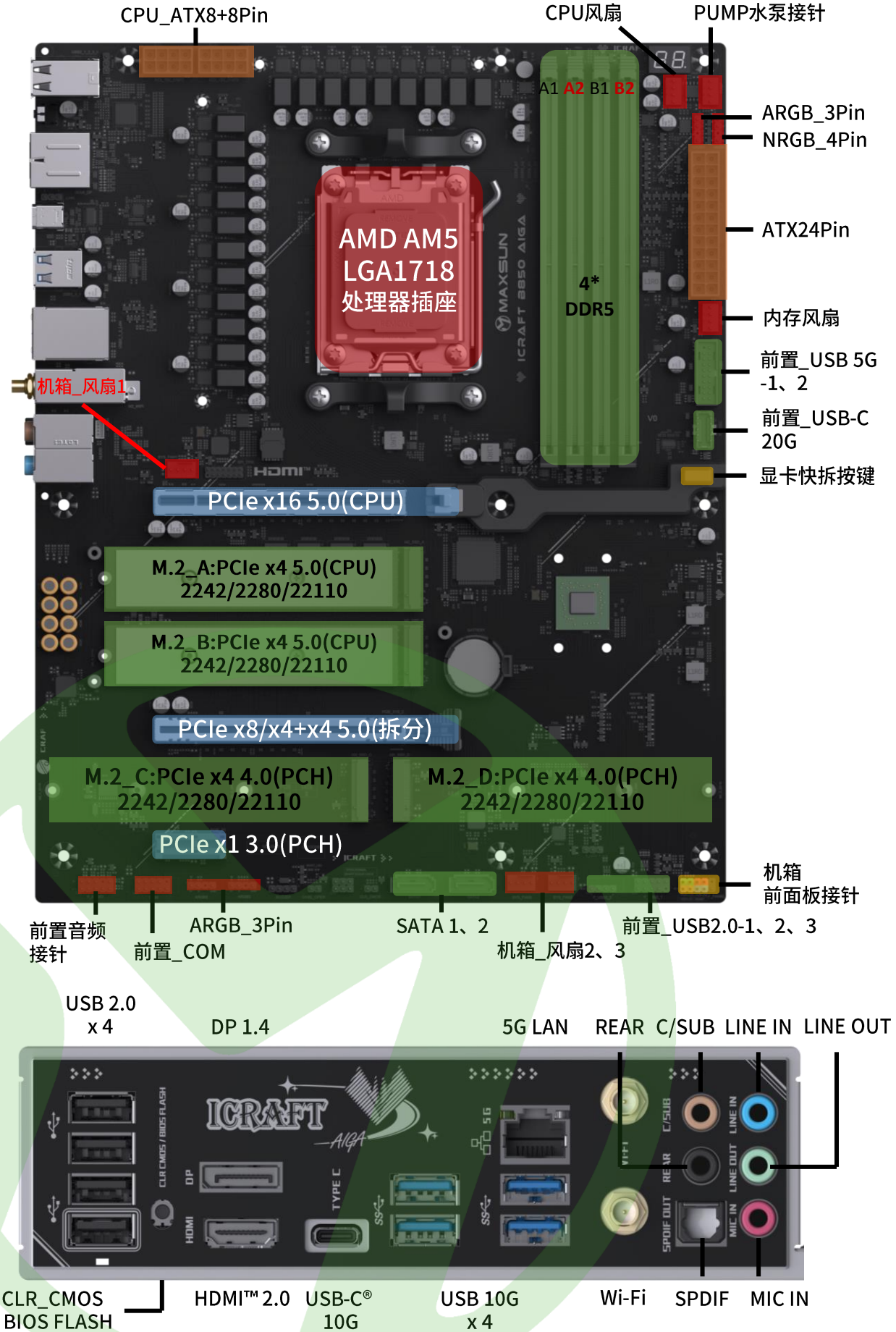
CPU_ATX8+8Pin
CPU风扇
PUMP水泵接针
A1 A2 B1 B2
ARGB_3Pin
NRGB_4Pin
ATX24Pin
AMD AM5
LGA1718
处理器插座
4*
DDR5
内存风扇
前置_USB 5G
-1、2
前置_USB-C
20G
机箱_风扇1
显卡快拆按键
PCIe x16 5.0(CPU)
M.2_A:PCIe x4 5.0(CPU)
2242/2280/22110
M.2_B:PCIe x4 5.0(CPU)
2242/2280/22110
PCIe x8/x4+x4 5.0(拆分)
M.2_C:PCIe x4 4.0(PCH)
2242/2280/22110
M.2_D:PCIe x4 4.0(PCH)
2242/2280/22110
PCIe x1 3.0(PCH)
机箱
前面板接针
前置音频
接针
ARGB_3Pin
前置_COM
SATA 1、2
机箱_风扇2、3
前置_USB2.0-1、2、3

USB 2.0
x 4
DP 1.4
5G LAN
REAR
C/SUB
LINE IN
LINE OUT
CLR_CMOS
/ BIOS FLASH
HDMI™ 2.0
USB-C®
10G
USB 10G
x 4
Wi-Fi
SPDIF
MIC IN

分布式 Debug灯 顺序

铭瑄 | 竞无止境

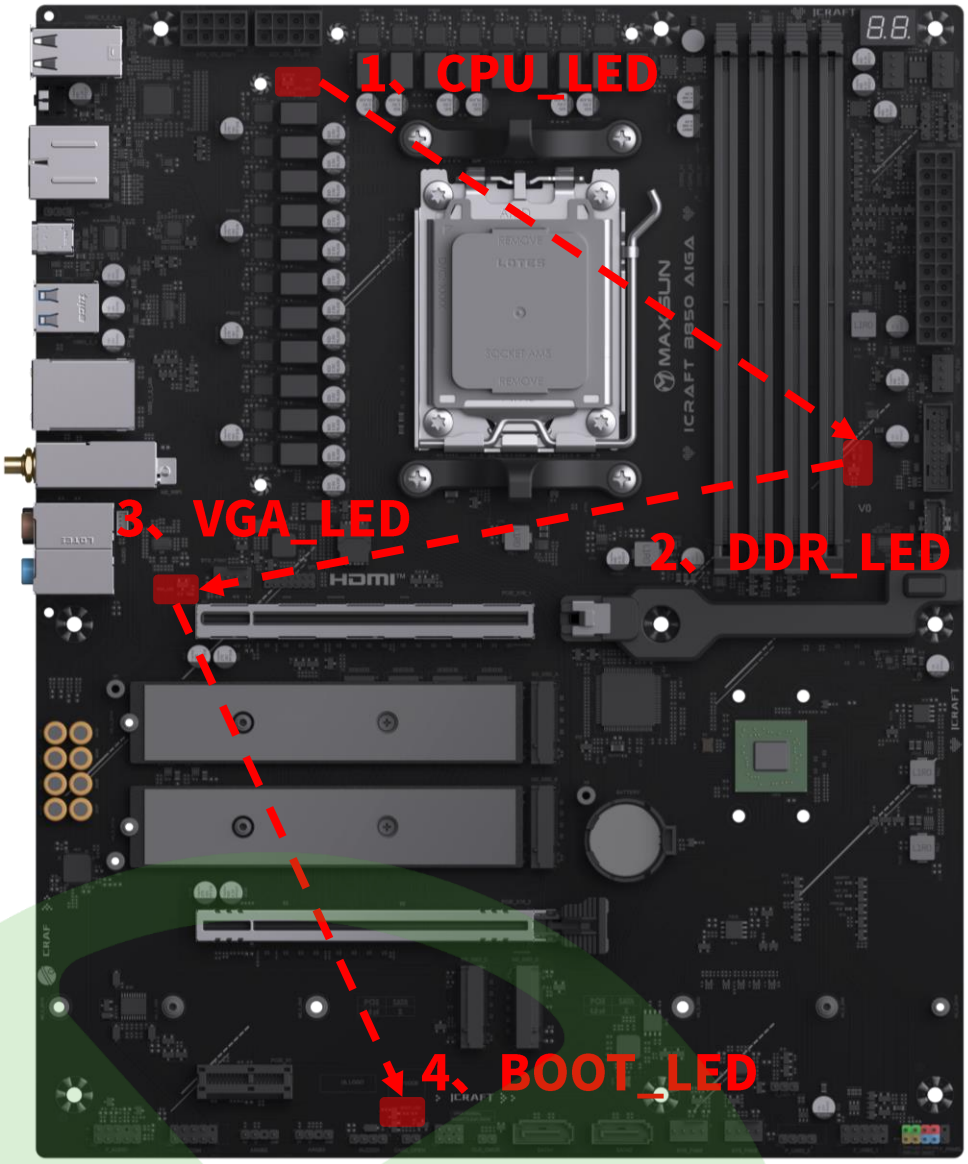

CPU_LED → DDR _LED → VGA _LED → BOOT _LED

1. CPU_LED 常亮表示 CPU 无法检测或故障，请检查 CPU 是否损坏或 CPU背面触点沾有脏污(如硅脂等) 导致；

2. DDR_LED 常亮表示内存无法检测或故障，请检查内存是否故障或修改超频参数(如电压、时序、频率等)导致;

3. VGA_LED 常亮表示显示卡无法检测或故障，请检查显示卡是否故障或者独显供电接口/显示输出接口未正常链接，显卡不兼容 UEFI 启动模式等；

4. BOOT_LED 常亮表示启动设备无法检测或故障，请检查启动设备是否损坏或者无启动设备导致；

快速指南:

再次感谢您购买和使用铭瑄产品。接下来将为您介绍主板产品上常见的接口以及安装使用方式，在正式开始之前，请确认准备好以下组件和工具：

- AMD AM5 LGA1718 CPU
- AMD LGA1718 600/800 系列主板
- LGA1718 CPU 散热器 & 导热硅脂
- DDR5 内存
- M.2 硬盘 / SATA 硬盘
- PCIe x16 显卡（如 CPU 自带核心显卡则非必须）
- 机箱
- 组装所需螺丝 & 螺丝刀 （组装台式机所使用螺丝一般为‘M3’&‘#6’规格）

接口安装指引

铭瑄 | 竞无止境

- AMD AM5 LGA1718 处理器安装

仅支持AMD AM5 LGA1718 7000 / 8000 / 9000 Ryzen处理器使用;
该插槽有防呆功能，安装处理器时注意防呆口，避免损坏处理器和处理器插槽

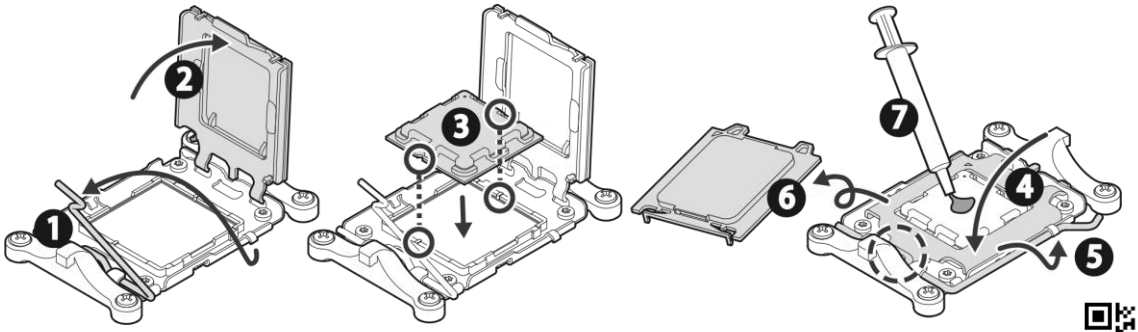

AMD AM5 LGA1718 CPU安装教程视频：
https://www.bilibili.com/video/BV16m421L7X4/

亦可扫码查看

- AMD AM5 LGA1718 CPU散热器安装

仅支持 LGA1718 孔距散热器，请勿使用其他孔位散热器强行安装，以免出现不必要的损坏和故障，
安装好散热器后注意接上 4Pin 风扇供电接针，以免风扇无法正常工作导致 CPU 过热损坏。

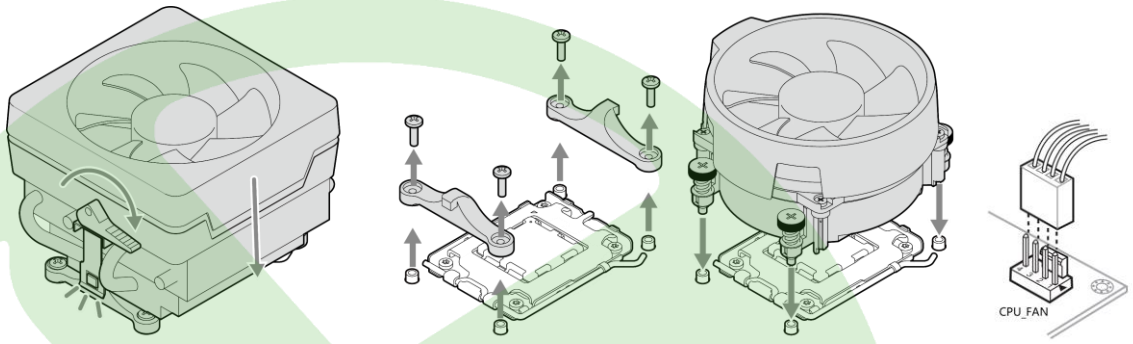

- DDR4 / DDR5_DIMM 内存安装

仅支持 UDIMM 内存插入使用， DDR4内存默认支持2400MHz， DDR5内存默认支持4800MHz，
插槽有插入防呆功能，切勿暴力插拔。

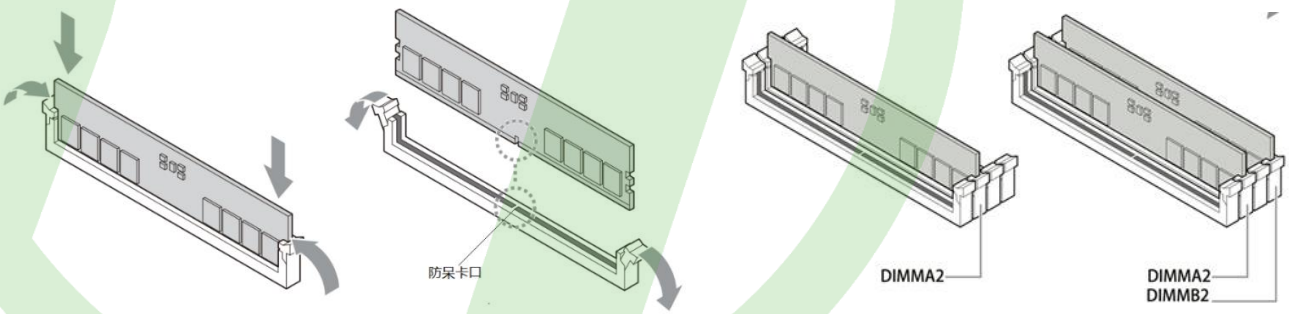

接口安装指引

- 24 Pin ATX 电源连接器安装
  用于连接主板 24 Pin 所需的 12V、5V、3.3V 供电使用，插座有插入防呆功能

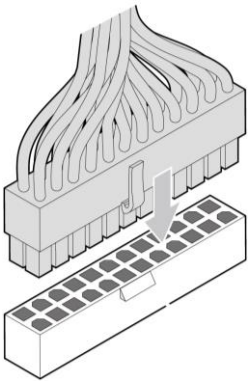

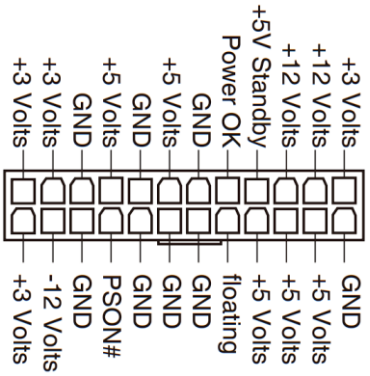

- CPU 8Pin +12V 电源连接器安装
  用于连接主板 CPU +12V 供电使用，接口有插入防呆功能，如主板上 CPU +12V 供电接口为 8 + 8 Pin，请务必插满 8+8 Pin 接口，以防因为线材过热发生不必要的硬件损坏

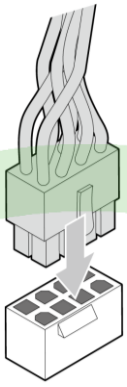

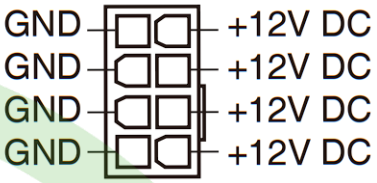

- CPU 4 Pin +12V 电源连接器安装
  用于连接主板 CPU +12V 供电使用，接口有插入防呆功能，如主板上 CPU +12V 供电接口为 8 + 4 Pin，请务必插满 8+4 Pin 接口，以防因为线材过热发生不必要的硬件损坏

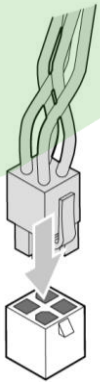

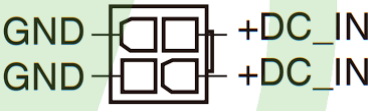

接口安装指引

铭瑄 | 竞无止境

- PCIe X16 插槽安装
  用于安装全长 PCIe X16 设备，建议用于安装独立显卡设备

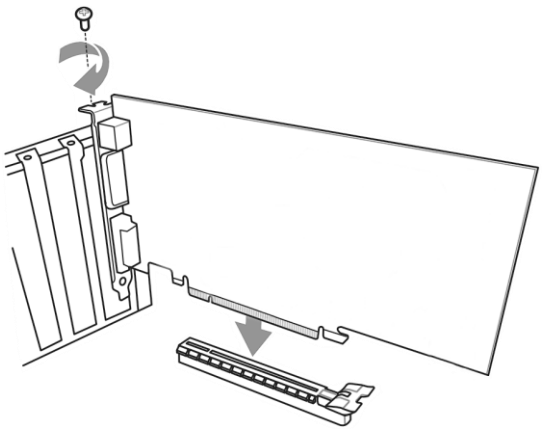

- PCIe X4 插槽安装
  用于安装 PCIe X4 设备

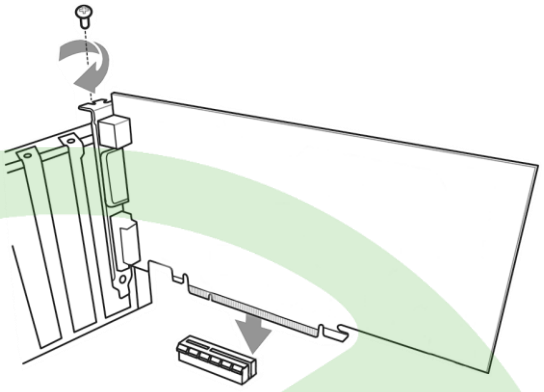

- PCIe X1 插槽安装
  用于安装 PCIe X1 设备

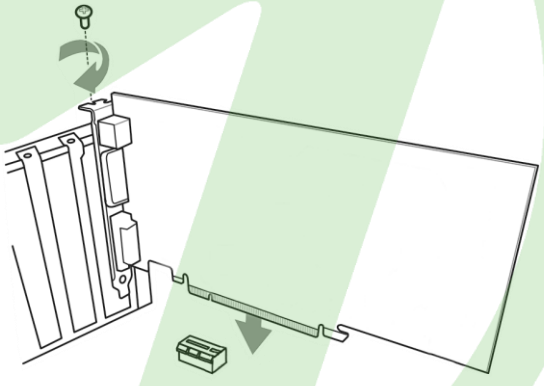

接口安装指引

铭瑄 | 竞无止境

- M.2 (Key_M) 插槽安装
  用于安装 M.2 存储设备，不同型号会有长度兼容区别，最高支持22110，安装时请注意按下图图示锁好固定螺丝，以防在使用过程中造成不必要的损坏或接触不良导致的数据丢失

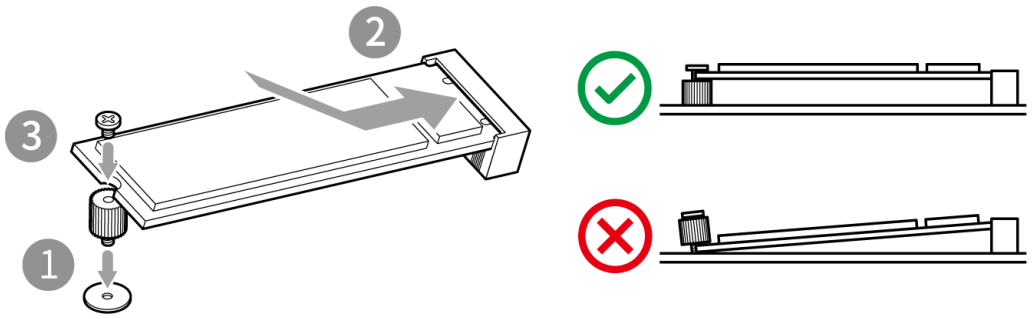

- 4 Pin PUMP 接针安装
  用于连接 CPU 水冷散热器的水冷头水泵供电使用，请务必连接，否则可能会因为 CPU 热量无法排出而导致硬件损坏，接口有插入防呆设计，该接口支持 PWM 模式

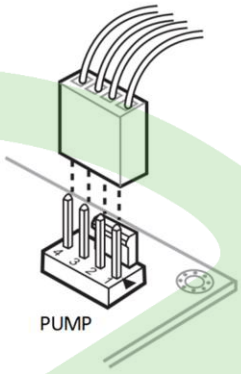

- 4 Pin 机箱风扇接针安装
  用于连接4 Pin 散热风扇使用，请务必连接，否则可能会因为机箱内热量无法排出而导致硬件损坏，接口有插入防呆设计，该接口支持 PWM 模式

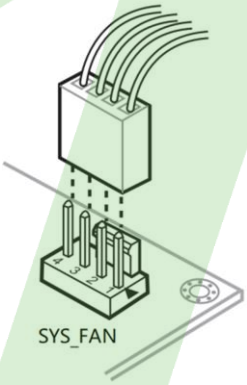

接口安装指引

铭瑄 | 竞无止境

- USB Type-C® 前置接口安装
  用于连接 Type-C® 模块，可扩展机箱前置 Type-C® 接口和后置 Type-C® 拓展接口。

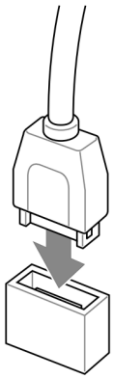

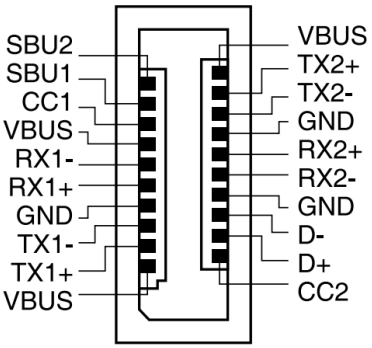

- USB 3.2 Gen1 前置接针 (19Pin) 安装
  用于连接 USB 3.2 模块，一组接针可扩展 2 个机箱前置 USB 3.2 Gen1 接口和后置 USB 3.2 Gen1 拓展接口。该接口协议为 USB 3.2 Gen 1 (5G)，数据传输率最高可达5Gb/s

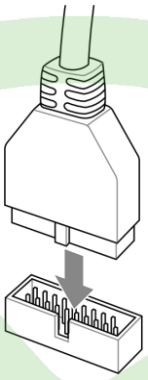

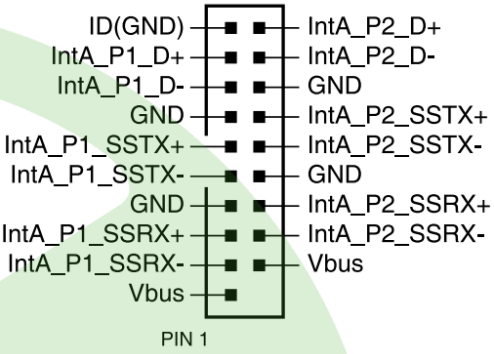

- USB 2.0 前置接针 (9Pin) 安装
  用于连接 USB 2.0 模块，一组接针可扩展 2 个机箱前置 USB 2.0 Gen1 接口和后置 USB 2.0 Gen1 拓展接口。该接口协议为 USB 2.0 (480M)，数据传输率最高可达480Mb/s

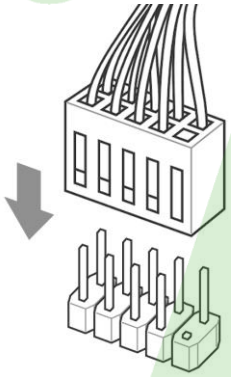

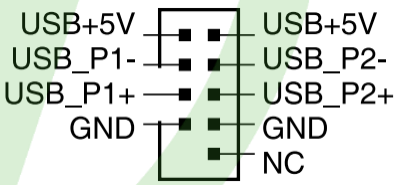

接口安装指引

铭瑄 | 竞无止境

- 3 Pin ARGB 接针安装
  用于连接3 Pin ARGB 灯光设备使用，灯效默认为关，支持BIOS 中灯效控制和系统下 MAXSUN SYNC 灯效软件控制，请注意该接针与 4 Pin RGB 设备不兼容，如误插可能会导致设备损坏，请注意区分

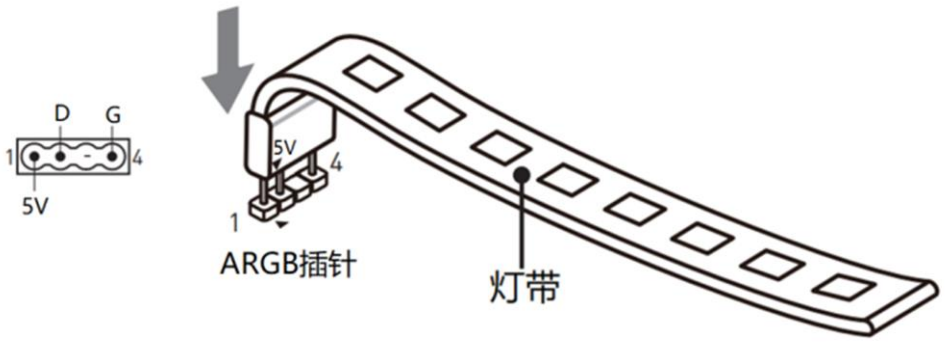

- 4 Pin ARGB 接针安装
  用于连接4 Pin NRGB 灯光设备使用，灯效默认为关，支持BIOS 中灯效控制和系统下 MAXSUN SYNC 灯效软件控制，请注意该接针与 3 Pin ARGB 设备不兼容，如误插可能会导致设备损坏，请注意区分

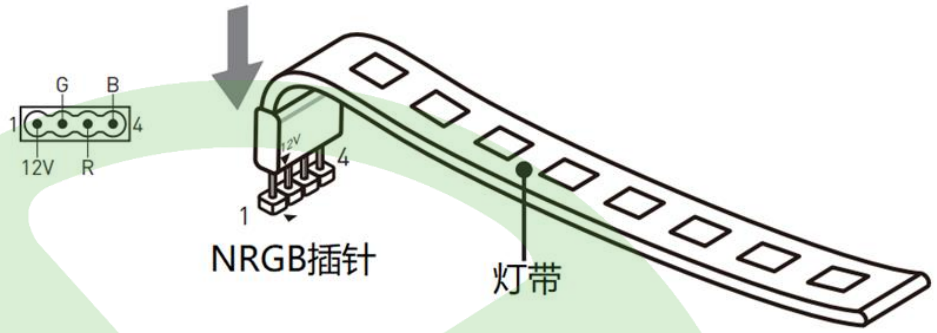

- SATA 接口安装
  用于连接 SATA 设备使用，使用 SATA 数据线连接 SATA 设备与主板上 SATA 接口，接口最高速率为 6 Gb/s ，部分 SATA 设备 (如 SATA 硬盘) 还需额外连接电源供电线使用。

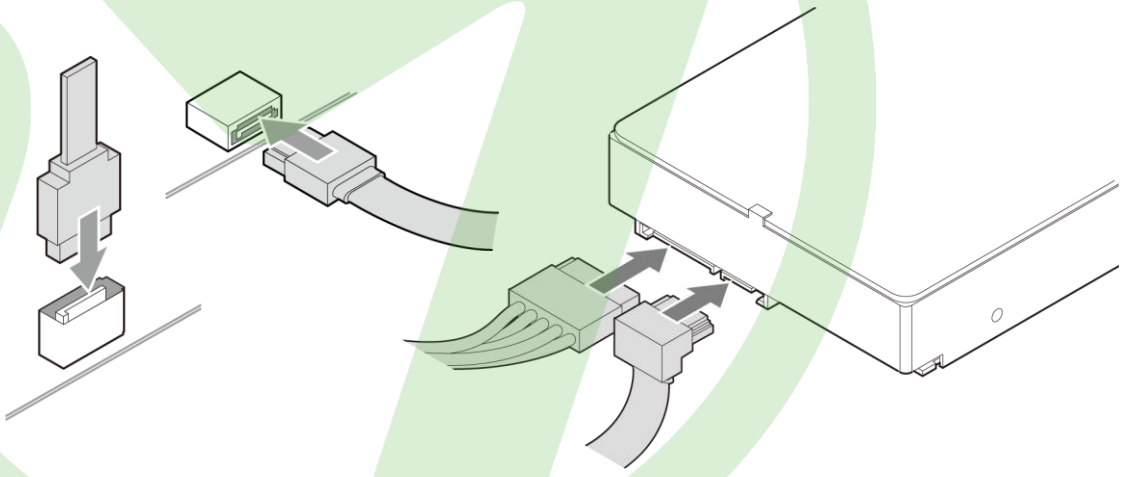

接口安装指引

铭瑄 | 竞无止境

- SFF-8654 4i 接口安装
  可用不同的 Slim SAS 连接排线连接 SFF-8654 4i 接口
  — 可转接为 U.2 接口，最高支持 PCIe 4.0 X4 模式 NVMe 协议设备（具体请查看主板对应规格表）
  — 可转接最多4个 SATA 接口，可供4个 SATA 设备同时使用（具体请查看主板对应规格表）

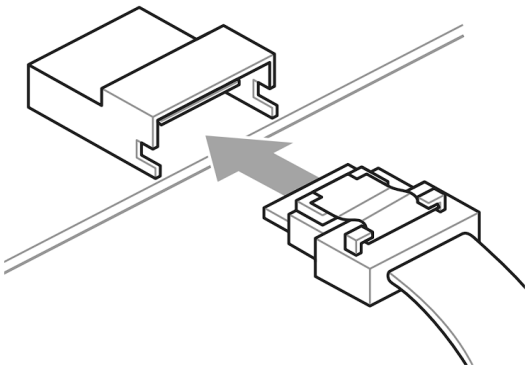

- 10-1 Pin F_PANEL 系统面板接针安装
  机箱前置面板插针，用于连接机箱开关机键、重启键、电源指示灯和硬盘指示灯使用

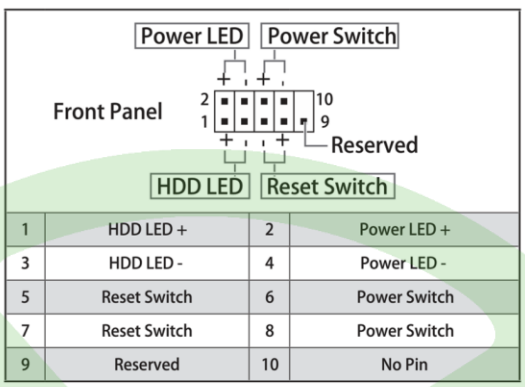

1	HDD LED +	2	Power LED +
3	HDD LED -	4	Power LED -
5	Reset Switch	6	Power Switch
7	Reset Switch	8	Power Switch
9	Reserved	10	No Pin

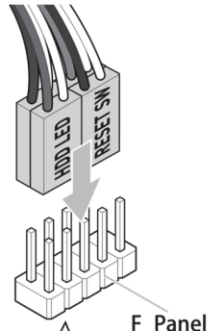

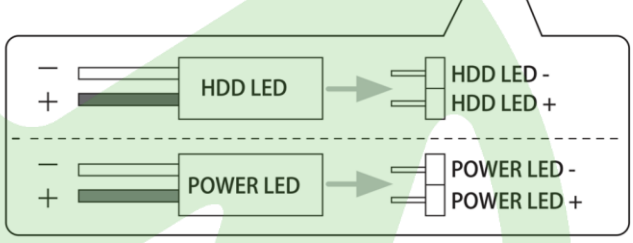

- F_AUDIO 前面板音频接针安装
  机箱前置面板音频插针，用于连接机箱前面板音频模块使用

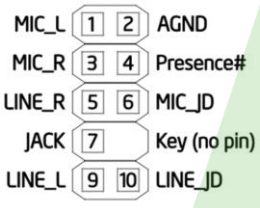

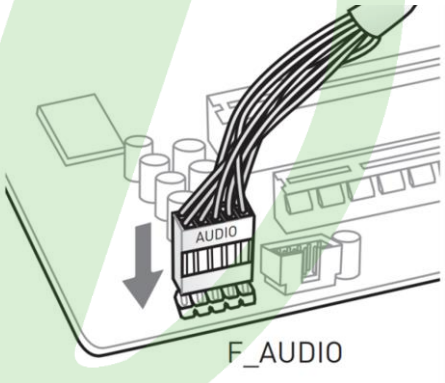

后置 I/O 接口指引

铭瑄 | 竞无止境

- USB 2.0 Type-A 接口
  用于连接 USB Type-A 设备。该接口协议为 USB 2.0 (480M)，数据传输率最高可达480Mb/s，建议用于连接键盘、鼠标、USB 耳机等对传输速度要求不高的 USB Type-A 设备。



- USB 3.2 Type-A 接口
  用于连接 USB Type-A 设备。该接口协议因主板设计不同而异，具体请查看主板对应规格表。建议用于连接 U盘、移动硬盘等对传输度有要求的 USB Type-A 设备。

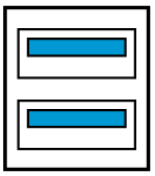

- P/S2 接口
  用于连接 P/S2 键鼠设备。

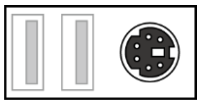

- USB Type-C® 接口
  用于连接 USB Type-C® 设备。该接口协议因主板设计不同而异，具体请查看主板对应规格表，建议用于连接 U盘、移动硬盘等对传输度有要求的 USB Type-C® 设备。

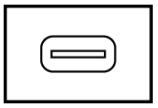

- HDMI™ 接口
  用于连接 HDMI™ 显示设备。该接口协议版本因主板设计不同而异，具体请查看主板对应规格表。



- DisplayPort 接口
  用于连接 DisplayPort 显示设备。该接口协议版本因主板设计不同而异，具体请查看主板对应规格表。



- RJ45 LAN 端口
  用于连接 RJ45 LAN 线缆。该端口的速率因主板设计不同而异，具体请查看主板对应规格表。

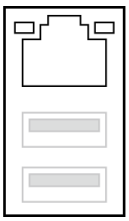

RJ45 LAN 端口 LED 状态指示灯

连线 / 工作灯号	
状态	描述
关	网络未连接
黄色	网络已连接
闪烁	网络数据在使用中

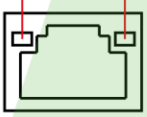

速度灯号	
状态	速度
关	传输速率 10 Mbps
绿色	传输速率 100 Mbps
橙色	传输速率 1000 / 2500 / 5000 Mbps

后置 I/O 接口指引

铭瑄 | 竞无止境

- Wi-Fi天线接口（外螺内针）
  用于连接 Wi-Fi 天线，请使用公头(内螺外针)的 Wi-Fi 天线连接。



- 5.1 声道音频接口
  用于连接音频设备。
  MIC-IN 接口(浅粉色)用于连接麦克风等输入设备；
  LINE-OUT 接口(浅绿色)用于连接音响喇叭等音频输出设备；
  LINE-IN 接口(浅蓝色)用于连接音频输入设备；

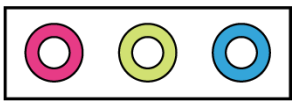

- 7.1 声道音频接口
  用于连接音频设备。
  MIC-IN 接口(浅粉色)用于连接麦克风等输入设备；
  LINE-OUT 接口(浅绿色)用于连接音响喇叭等音频输出设备；
  LINE-IN 接口(浅蓝色)用于连接音频输入设备；
  C/SUB 接口(浅橙色)用于连接重低音声道；
  REAR 接口(浅灰色)用于连接环绕音声道；
  SPDIF OUT 光纤接口用于连接拥有对应接口的功放、解码、投影仪等设备；

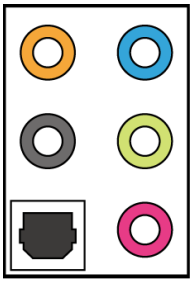

BIOS 概述

1.BIOS 介绍

1.1 BIOS 说明

BIOS 全称为 Basic Input/Output System（基本输入/输出系统），当您打开电脑时，BIOS 是最先被运行的程序，修改的 BIOS 设置会被存在一个以电池维持的 CMOS RAM 中，以确保在系统电源切断时所存的BIOS设置不会丢失。一般情况下，系统运行正常时，无需修改 BIOS 。由于电池电力耗尽导致 CMOS 数据丢失时，须更换电池，并重新设定 BIOS 值。

注：BIOS 界面选项及功能会因实际版本不同而有所区别，请用户依实际版本为准。

2. BIOS 操作说明

2.1 进入 BIOS 操作说明

要进入 BIOS 设定程序画面，请按下列步骤：

打开电源或重新启动系统，待屏幕显示 Press<DEL>to enter setup；

按下<DEL>键后，即可进入 BIOS 设定程序。

2.2 BIOS 鼠标操作说明

左键 → 选择

2.3 BIOS 键盘操作说明

↑↓→←：移动

Enter ：选择/确认

+/- ：修改选项

F1 ：帮助

F3 ：风扇控制

F4 ：收藏夹

F5 ：搜索

F6 ：用户设定

F7 ：上一设定值

F8 ：EzUpdate

F9 ：加载默认值

F10 ：保存并重启

F11 ：回到预览

F12 ：截图

Insert ：添加/删除 收藏

Home ：返回主目录

3. 界面介绍

3.1 BIOS 界面:

本 BIOS 界面共分为五个功能区域，分别为[主菜单栏]、[功能选项区]、[选项说明区]、[顶部搜索框] 和 [顶部功能按键]

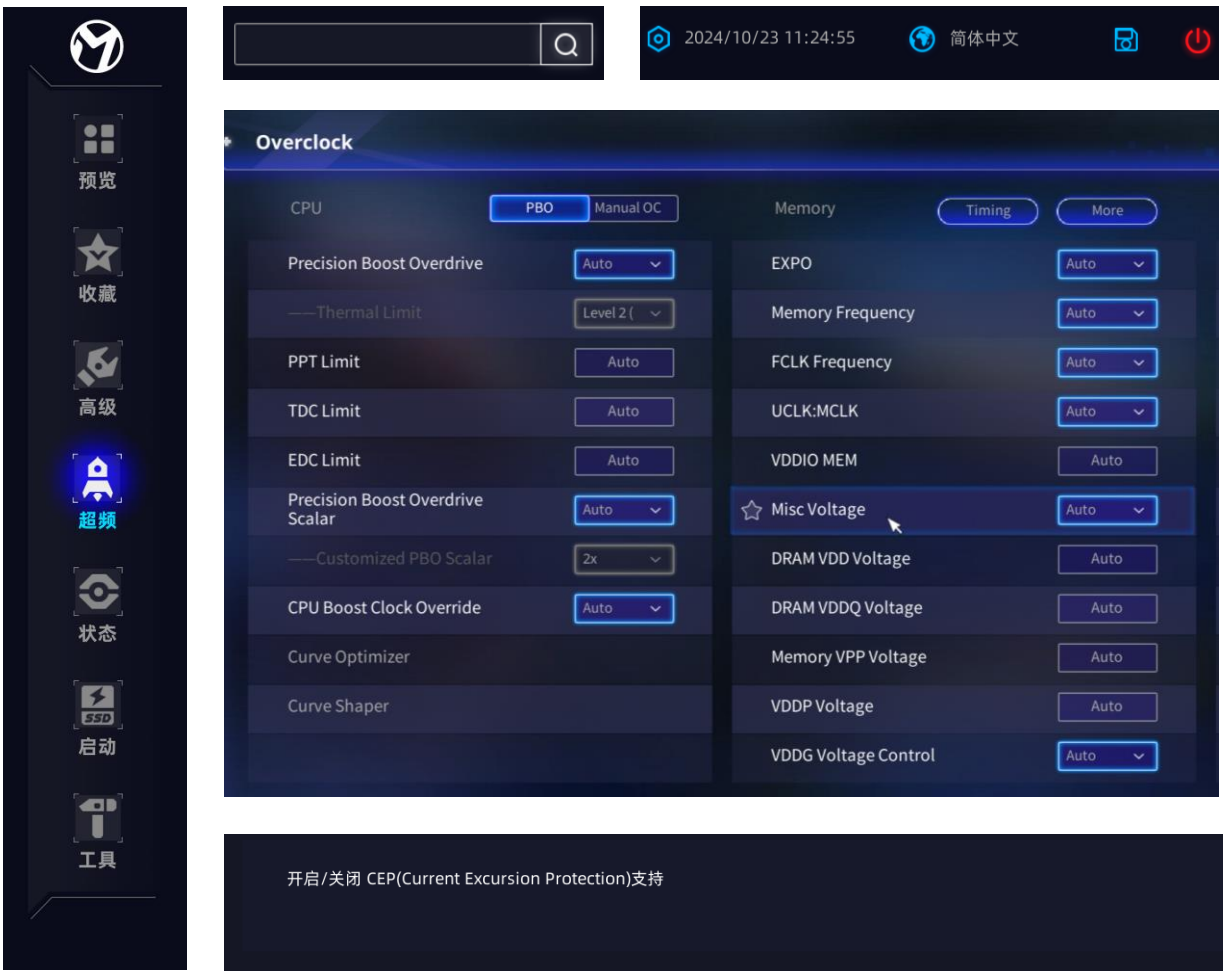

主菜单栏分别可进入七个界面，分别为 Preview（预览）、Favorites（收藏）、Advanced(高级)、 Overclock(超频)、 Status （状态） 、Boot（启动)、Tools（工具）；

其中 Advanced(高级)、 Overclock(超频)、 Boot（启动) 界面都存在功能选项区；

存在功能选项区的界面会在下方存在选项说明区，解释选项的作用和可选项等；

顶部搜索框则可以点击进入进行选项搜索（仅支持输入英文检索，但检索后显示选项语言以当前 BIOS 所选语言为准）；

顶部功能按键为别为：[BIOS时间设置]、[BIOS语言选择]、[退出BIOS界面]、[关机功能]

3.2 搜索界面：



点击 [搜索框] 进行选项搜索（仅支持输入英文检索，但检索后显示选项语言以当前 BIOS 所选语言为准）。

3.3 退出BIOS界面：



点击顶部 [退出BIOS] 按钮，进入 [退出BIOS界面]，此时可选择 [保存/放弃更变]、[保存变更并重启]、[放弃变更并重启]、[加载默认值] 选项，同时还可以直接选择启动项重启进入对应启动项。

3.3 保存变更并重新启动： 保存变更并重启



点击 [退出BIOS] 中的 [保存变更并重启] 或在操作 BIOS 过程中按 [F10]，即会弹出 [保存变更并重启] 界面，在此界面中，可查看用户在本次进入 BIOS 后的所有选项变更，并在此基础上再次进行选项值的变更操作，确认无语后点击 [是] 便会保存变更并重启，若点击 [否] 则会退出此界面。

3.4 BIOS 时间设置： 2024/10/23 11:24:55



点击 [BIOS时间设置] 按钮，进入 BIOS时间设置 界面，进行 BIOS 时间设置。

BIOS 各界面&功能介绍

1. Preview（预览）



Preview（预览）界面一共分为8个模块，分别为 [功能开关]、[性能模式]、 [内存状态]、[CPU状态]、[风扇设置]、[启动优先级]、[硬件状态]、[基本信息]。

1.1 功能开关



[功能开关] 模块中，有4个快捷功能的按键，分别为 [EXPO]、[ReSize Bar]、[EUP]、[RGB]，点击快捷功能后可启用对应功能，功能对应选项也会跟随变更。

1.2 功能开关



[性能模式] 模块中，有3档性能设置选项，分别为 [默认]、[铭瑄推荐]、[极致性能]，点击对应性能设置后，BIOS中 [PL1]、[PL2]、[PWM Loadline] 等选项会跟随变更。

1.3 内存状态



[内存状态] 模块中，可实时显示主板的内存槽上安装了什么内存，安装在什么插槽，并可以读取到简单的内存的SPD信息，界面右上角有[内存插槽警告]功能，开启后，系统在检测到内存没有安装在最佳插槽时，开机会自动进入BIOS并弹出提醒，如下图所示。



1.4 CPU状态



[CPU状态] 模块中，可显示当前所安装 CPU 的简单信息，如：CPU型号、核心/线程、CPU频率、核显型号等。

1.5 内存状态



[风扇设置] 模块中，可实时显示当前安装在主板上的风扇转速情况，点击界面右上角的 [风扇设置] 按键，可进入 [风扇曲线调节] 界面。

1.6 启动优先级



[启动优先级] 模块中，可调整设备第一启动优先级，可使用鼠标点击拖动图标或键盘 +/- 按键操作。

1.7 硬件状态



[硬件状态] 模块中，可实时显示当前主板的 CPU、内存、电压 等重要信息，包括频率、温度、内存时序和各种电压等。

1.8 基本信息

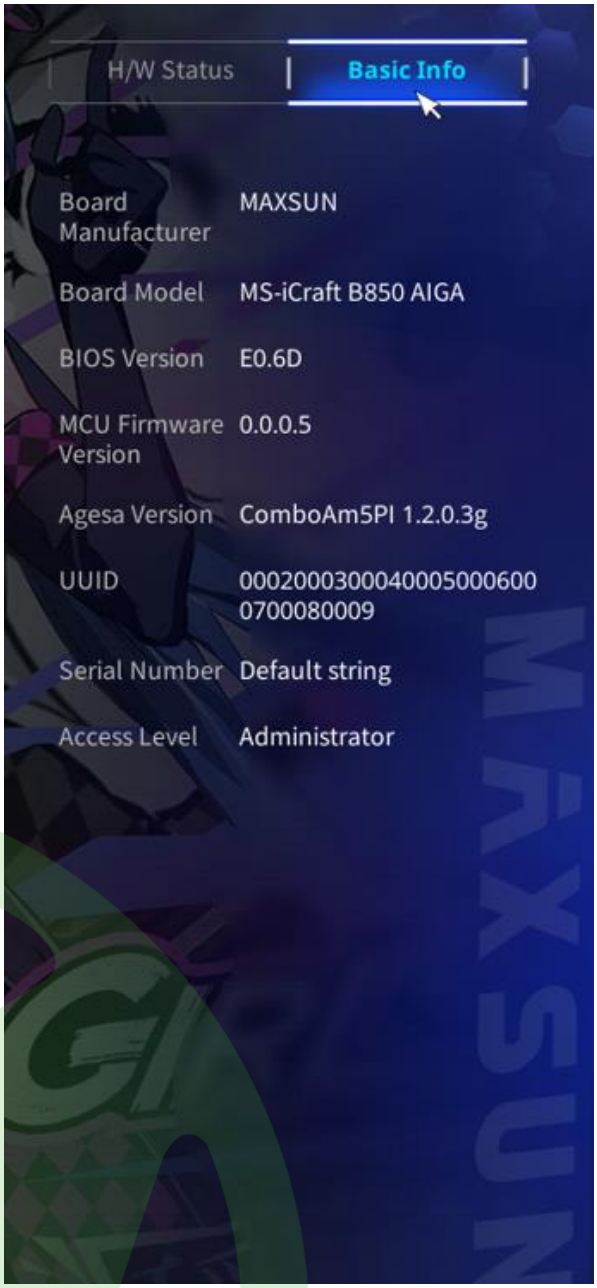

[基本信息] 模块中，显示当前主板上的一些基本信息，如 主板型号、BIOS版本等。

1.9 风扇曲线调节



[风扇曲线调节] 界面可通过 [预览] 界面的 [风扇设置] 模块或 [状态] 界面的 [风扇设置] 模块进入，在此界面中，用户可设置安装在主板上的风扇曲线，可选择官方预设的 标准、静音、高效、全速 4个挡位，亦或者用户可以手动自定义风扇曲线。

在设置好一个风扇的曲线后，可使用右侧 [设置到全部风扇] 按键将该曲线应用到主板安装的所有风扇中。

在该界面可开启 [CPU风扇失效警告]，开启后，当系统检测到主板 CPU_FAN 未安装风扇时，开机会自动进入BIOS并弹出提醒，如下图所示。

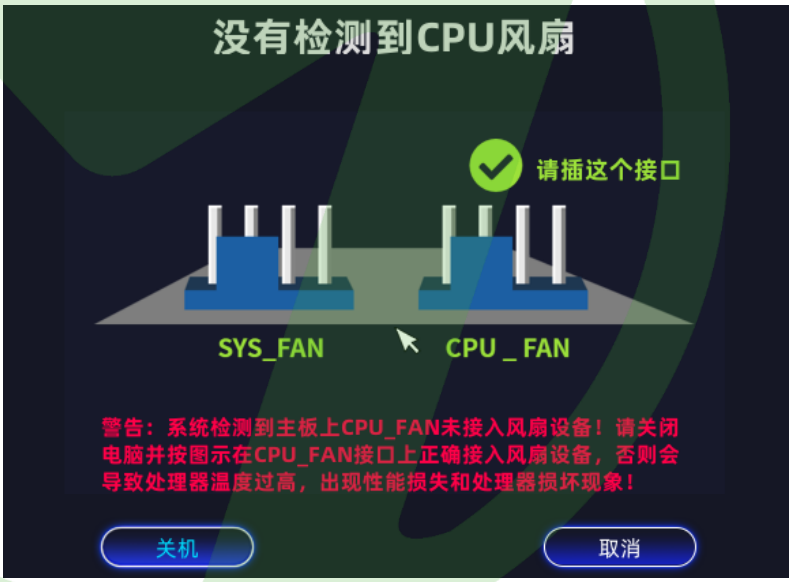

2. Favorites（收藏）

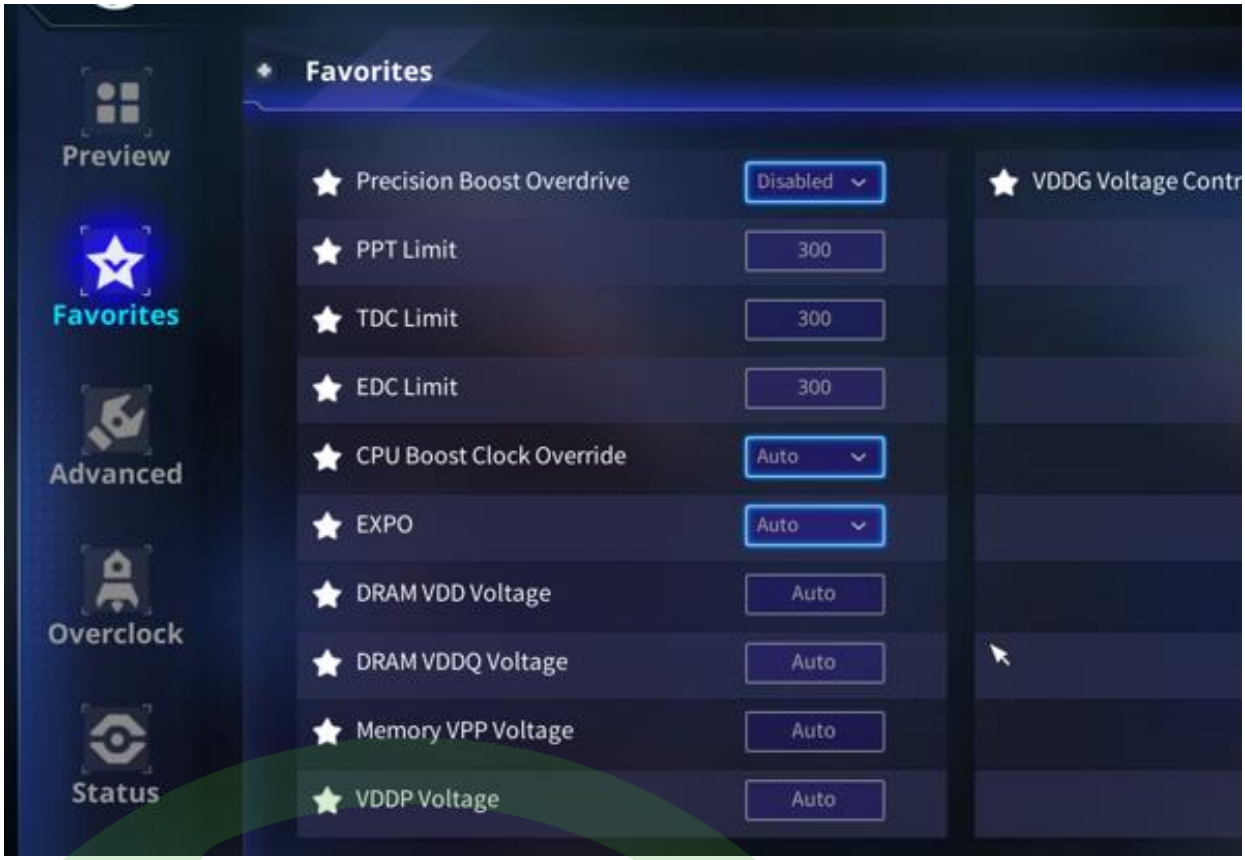

Favorites（收藏）界面可查看当前 BIOS 中被用户收藏的选项，并在此界面可进行选项设置。

点击 BIOS 中选项前方的灰色星星 

将其点亮为白色 

即为收藏成功。

当用户需要取消收藏时，找到已收藏的选项或进入收藏界面，点击选项前方的白色星星，使其变为灰色初始状态，即为取消收藏。

3. Advanced（高级）

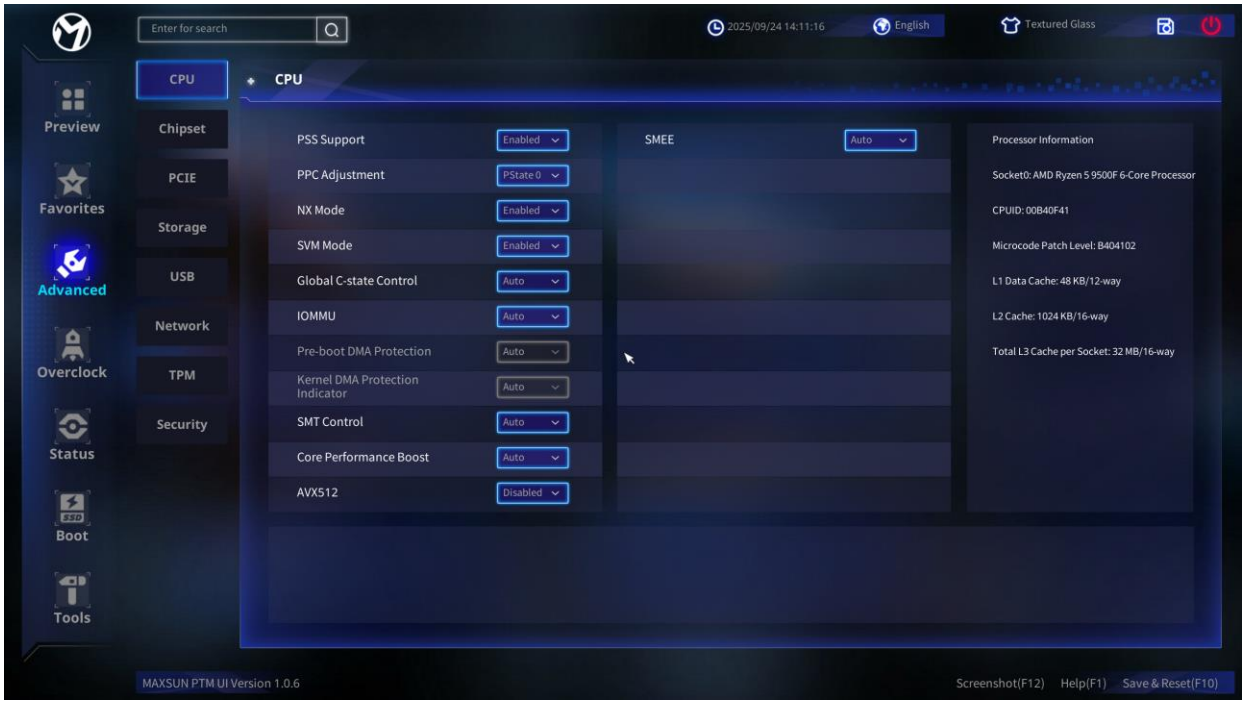

Advanced（高级）界面一共分为8个子菜单，分别为 [CPU设置]、[芯片设置]、 [PCIE设置]、[存储设置]、[USB设置]、[网络堆栈]、[TPM设置]、[安全设置]。



当BIOS选中光标停在主菜单的 [高级] 图标上的时候，使用键盘→ 键即可进图 [高级] 菜单的子菜单，使用键盘的↑ ↓键进行子菜单的选择，选中子菜单后再次使用键盘→ 键即可进入子菜单对应的功能选项区。

3.1 CPU设置



[PSS 支持] 选择开启或关闭 PSS 平台优先级调度器；PSS 是 AMD 处理器中的一种技术，用于管理处理器的性能状态，以优化功耗和性能。

[PPC 限制] 设置PState模式。此项在 PSSSupport 设置为 Enabled 时出现，用于调整处理器功耗和性能平衡的功能。

[NX 模式] 选择开启或关闭 NX 模式(内存防病毒保护)。此选项可设置通过硬件阻断数据区代码执行，提升系统安全性，超频玩家关闭可以排除内存权限干扰，确保超频稳定性测试通过。

[Global C-State Control] 选择开启或关闭 全局 C 状态控制。此选项可设置CPU闲置时是否进入低功耗模式。

[IOMMU] 选择开启或关闭 I/O 虚拟化的 IOMMU(I/O Memory Management Unit)。

[SMT Control] 选择开启或关闭 CPU 对称超线程。

[Core Performance Boost] 选择开启或关闭处理器睿频功能。

[AVX512] 选择开启或关闭处理器 AVX512 指令集拓展。

[SMEE] 选择开启或关闭 SMEE 功能。

3.1 CPU设置



[CPU设置] 界面右侧为 CPU 详细信息显示框，用户可在此查看 CPU 详细信息。

3.2 芯片组设置



内置设备

[Primary Video Device]：设置选择主要显示输出设备。默认为自动；若安装独立显卡的情况下优先独立显卡；可选核心显卡[IGFX]为主要输出设备；可选独立显卡[PCIE]为主要输出设备；或选择独立显卡+核心显卡混合输出[PEG]。

[Internal Graphics]：设置核心显卡的开启/关闭，默认为自动；若在未安装独立显卡或 [主要显示设备] 设置为核心显卡[IGFX]的情况下，请勿关闭，否则开机无显示输出。

[UMA Framebuffe rSize]：手动设置核心显卡显存大小，或允许系统为核心显卡动态分配系统内存。

[Serial 端口]：开启/关闭 Serial 端口(COM)。

[Change Settings]：选择设置 Serial 端口配置的资源。

[App Compatibility Database]：开启/关闭 App Compatibility Database.

3.3 PCIE设置



[Native ASPM]：选择 ASPM 电源控制方式。开启：由系统控制；关闭：由 BIOS 控制。

[CPU PCIE ASPM Mode Contorl]：设置 CPU 和 PCIe 设备协同实现的硬件级动态节能技术。

[PCIe X16 ASPM]：设置 PCI Express 设备的 ASPM 节电模式状态。

[CPU PCIe Lanes Configuration]：配置来自于 CPU 的 PCIe 通道分配，以适应多个 PCIe 设备的使用需求。

[PCIe X16 Link Mode]：设置 PCI Express X16 插槽的 PCIe 通讯协议速率，以便更好的支持不同的PCIE设备。

[M2_SSD Link Mode]：设置 M.2 SSD 接口的 PCIe 通讯协议速率。

[Chipset Link Mode]：设置芯片组和 CPU 之间通讯的 DMI 通讯协议速率。

[Above 4G Decoding]：开启或关闭使用 4G 以上内存地址空间的 64 位解码设备。该选择仅在开启[ReSize BAR Support]功能时可用。

[ReSize BAR Support]：开启或关闭 Resize BAR(Base Address Register) 支持。

[SR-IOV Support]：开启或关闭 SR-IOV (Single Root I/O Virtualization)虚拟化功能。

3.4 存储设置

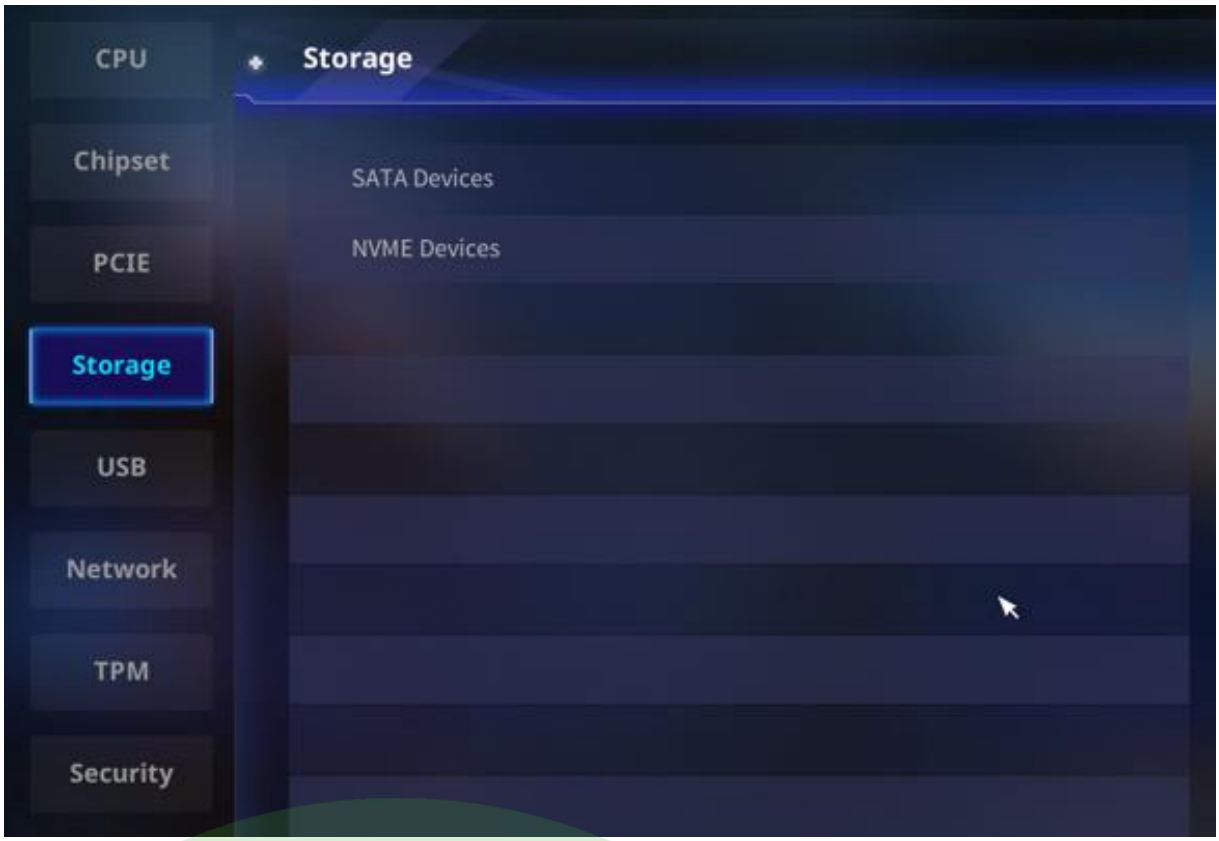

[SATA 设备]：SATA 设备控制。

[NVME 设备]：NVME 设备控制。

3.5 USB设置



[后置/前置 USB 端口]： 设置对应 USB端口 开启/关闭。

3.6 网络堆栈



[网卡控制]： 开启/关闭板载网卡。

[MAC 地址]： 显示本设备 LAN MAC 地址。

[驱动版本]： 显示本设备 LAN 驱动版本。

[UEFI 无盘启动]： 开启/关闭 UEFI 无盘。

[--IPv4 PXE支持]： 开启/关闭 IPv4 PXE 启动支持。

[--IPv4 HTTP支持]： 开启/关闭 IPv4 HTTP 启动支持。

[--IPv6 PXE支持]： 开启/关闭 IPv6 PXE 启动支持。

[--IPv6 HTTP支持]： 开启/关闭 IPv6 HTTP 启动支持。

[--PXE 启动等待时间]： 按 ESC 键终止 PXE 启动的等待时间(秒)。使用 +/- 或数字键设置数值，默认为自动。

[--Media detect count]： 检测网络媒介设备的次数。使用 +/- 或数字键设置数值，默认为自动。

3.7 TPM设置

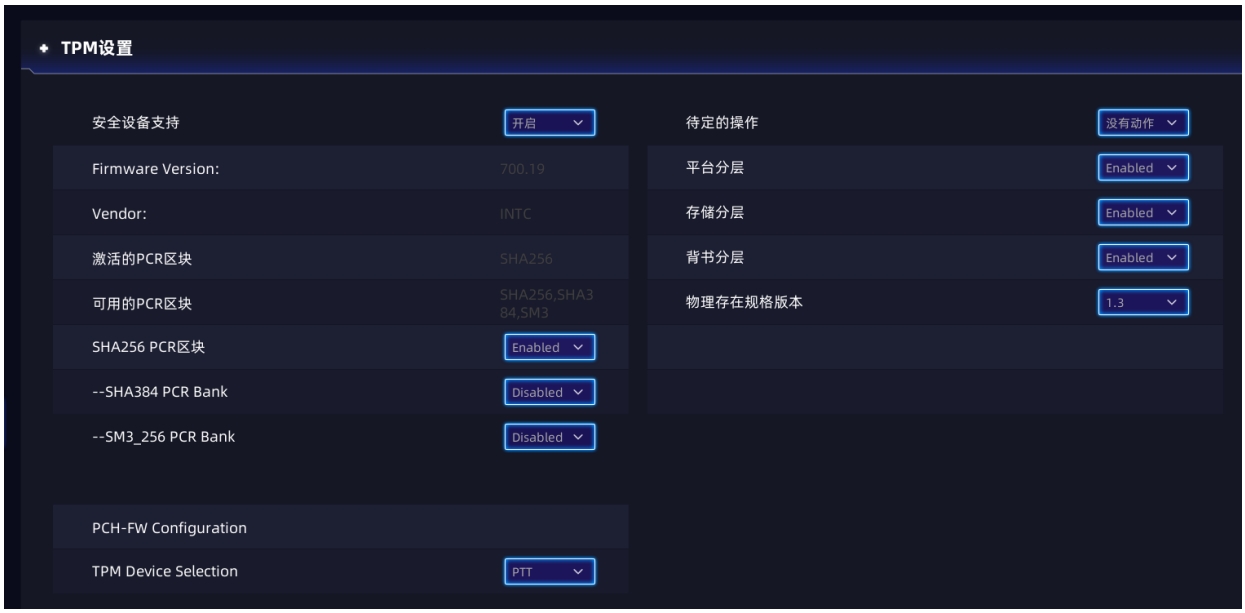

[安全设置支持]： 开启/关闭 BIOS 对安全设备的支持，操作系统下不会显示安全设备。TCG EFI 协议和 INT1A接 口不可用。

3.8 安全设置



[管理员密码]：设置管理员密码。

[用户密码]：设置用户密码。

4. OverClock（超频）



OverClock（超频）界面一共分为3个模块，分别为 [CPU]、[内存]、 [平台] ，每个模块中有相对于的超频选项，并且每个模块的右上角还有进阶选项的跳转界面按键。

提示：此界面所有选项设置均有可能会导致系统运行崩溃、硬件损害等现象，请用户谨慎操作。

4.1 CPU



[Precision Boost Overdrive]： 开启/关闭/选择 PBO 模式。除开启或关闭 PBO 模式外，还能选择更多不同的 PBO 方式。

[Thermal Limit]： 手动选择 CPU 的温度墙上限。该选项只会在[Precision Boost Overdrive] 选项选择[Enhancement]时开启。

[AMD Eco Mode]： 手动选择解锁 CPU 的功耗上限。该选项只会在[Precision Boost Overdrive] 选项选择[AMD Eco Mode]时开启。

[PPT Limit]： 设置CPU PPT(Package Power Tracking)功耗限制。

[TDC Limit]： 设置CPU TDC(Thermal Design Current)持续电流限制。

[EDC Limit]： 设置CPU EDC(Electrical Design Current)瞬时电流限制。

[Precision Boost Overdrive Scalar]： 选择自动/手动设置 PBO 的压力程度。

[Customized PBO Scalar]： 手动设置 PBO 的压力程度。调节范围为1x-10x，数值越大，系统对电压、频率和温度的控制程度越激进。

[Max CPU Boost Clock Override(+)]： 手动设置提升系统负载时 CPU 的频率，可设置范围为 25~200，每设置 100 的数值，反馈到频率上的表现就是提升 0.1Ghz。

[Curve Optimizer]： 设置开启 PBO 模式时，CPU的 降压/升压的范围，可选 全部核心/每个核心/每个CCD 来进行单独的降压/升压。

[CPU Core Ratio]： 手动设置 CPU 核心频率倍数系数，可设置范围 14x - 60x。此选项随意设置可能会导致系统运行崩溃、硬件损害等现象，请谨慎操作。

[CPU Core Voltage]： 手动设置 CPU 核心电压，可设置范围 0.8V - 1.55V。此选项随意设置可能会导致系统运行崩溃、硬件损害等现象，请谨慎操作。

4.2 Memory(内存)



[内存预设]：选择内存预设配置文件，选择后，内存频率、时序和电压等数值由预设文件中设定进行覆写，具体数值视内存预设文件而定，请谨慎选择。

[内存频率]：设置内存最大频率。此选项随意设置可能会导致不开机、系统运行崩溃等现象，请谨慎操作。

[内存时序]：进入内存时序页面，设置内存时序值。随意设置可能会导致不开机、系统运行崩溃等现象，请谨慎操作。

[FCLK频率]：设置 FCLK 最大频率。此选项随意设置可能会导致不开机、系统运行崩溃等现象，请谨慎操作。

[UCLK:MCLK]：设置内存控制器时钟频率（UCLK）与内存时钟频率（MCLK）的工作模式。此选项随意设置可能会导致不开机、系统运行崩溃等现象，请谨慎操作。

[VDDIO MEM电压]：设置内存 VDDIO 电压设置，输入0时为自动。

[DRAM 高电压模式]：开启/关闭内存高电压模式，关闭时，内存电压上限为1.435V，开启后，内存电压上限提升为2.070V，默认为关闭，请谨慎操作。

[内存 VDD 电压]：设置内存 VDD 电压设置，输入0时为自动。

[内存 VDDQ 电压]：设置内存 VDDQ 电压设置，输入0时为自动。

[内存 VPP 电压]：设置内存 VPP 电压设置，输入0时为自动。

[VDDP 电压]：设置 VDDP 电压设置，输入0时为自动。

4.3 Platform(平台)



[CPU SOC 电压]：设置 CPU 核心SOC 电压设置，输入0时为自动。

[VDDG CCD 电压]：设置 VDDG CCD 电压设置，输入0时为自动。

[VDDG IOD 电压]：设置 VDDG IOD 电压设置，输入0时为自动。

[CCD Switch]：设置 CPU 内部 CCD 核心的开关，默认为全部开启。

[Thermal Limit]：手动设置 CPU 的温度墙限制，但无法设置超过 CPU 限定的最大上限值(95°C)。

[Clock Spread Spectrum]：开启或关闭核心频率展频功能，开启后可减少电磁干扰，关闭则能提高少许 CPU BCLK的超频能力。

[Memory Latency Reduce]：开启或关闭内存低延迟模式。

5. Status（状态）

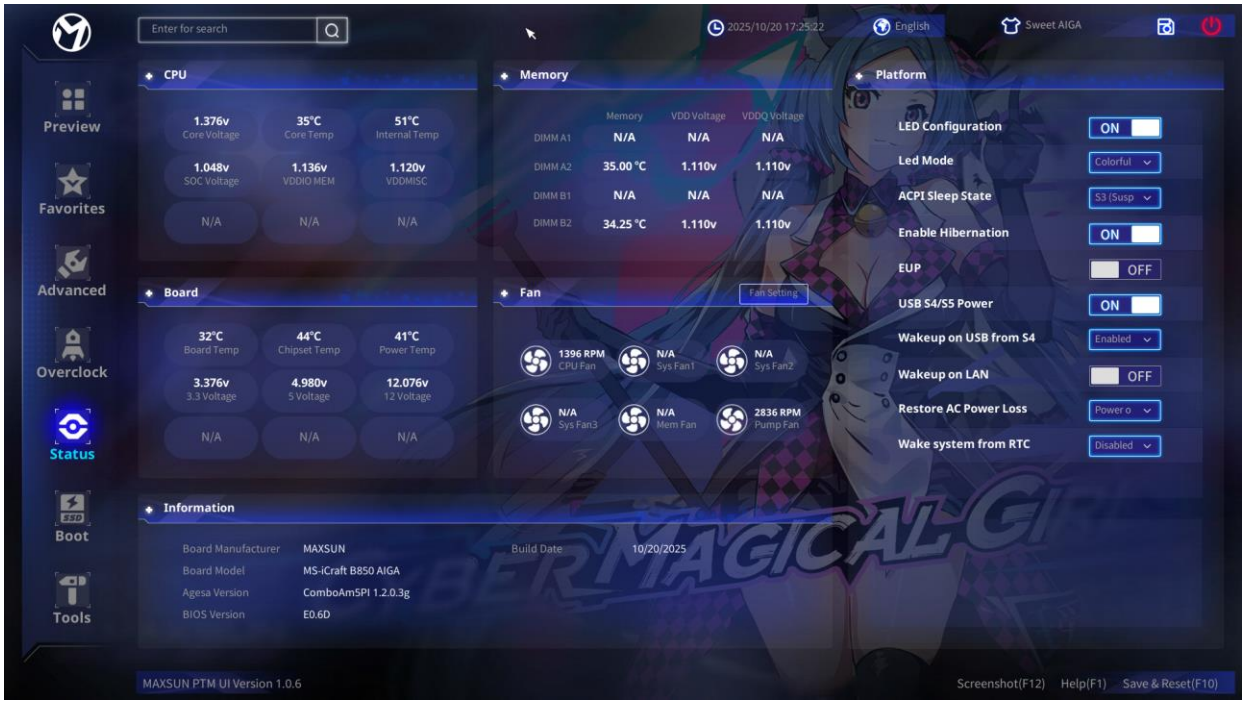

Status（状态）界面一共分为6个模块，分别为 [CPU电压/温度]、[内存电压/温度]、 [主板电压/温度]、 [风扇状态]、[主板信息]、 [电源选项] 。

[CPU电压/温度]模块显示当前 CPU 的相关电压和温度信息。

[内存电压/温度]模块显示当前内存的相关电压和温度信息。

[主板电压/温度]模块显示当前主板的相关电压和温度信息。

[风扇状态]模块实时显示当前安装在主板上的风扇转速情况，点击界面右上角的[风扇设置] 按键，可进入 [风扇曲线调节] 界面。

[主板信息]模块显示当前主板上的一些基本信息，如 主板型号、BIOS版本等。

[电源选项]模块中有电源相关的选项。

6. Boot（启动）



[全屏开机画面]： 开启/关闭全屏开机画面。

[启动等待时间]： 设置开机时可使用键盘快捷键的等待时间，可设置 1 - 65535 秒。

[启动时数字键盘状态]： 选择启动时 NumLock(数字键盘) 激活状态。

[Fast Boot]： 开启/关闭 Fast Boot 功能。开启后，设备启动时将跳过启动等待时间，USB、PS2等输入设备在启动阶段都将失效，用户将无法通过键盘操作进入BIOS;需操作系统、主引导设备和主要显示设备均支持UEFI才可生效。非必要不建议开启.。

[CPU 和内存变更提醒]： 检测到 CPU 或 内存变更时，将进行提醒。

[UEFI USB 设备优先级]： 设置 UEFI USB 设备第一优先级。

[UEFI NVME 设备优先级]： 设置 UEFI NVME 设备第一优先级。

[UEFI HDD 设备优先级]： 设置 UEFI HDD 设备第一优先级。

7. Tools（工具）

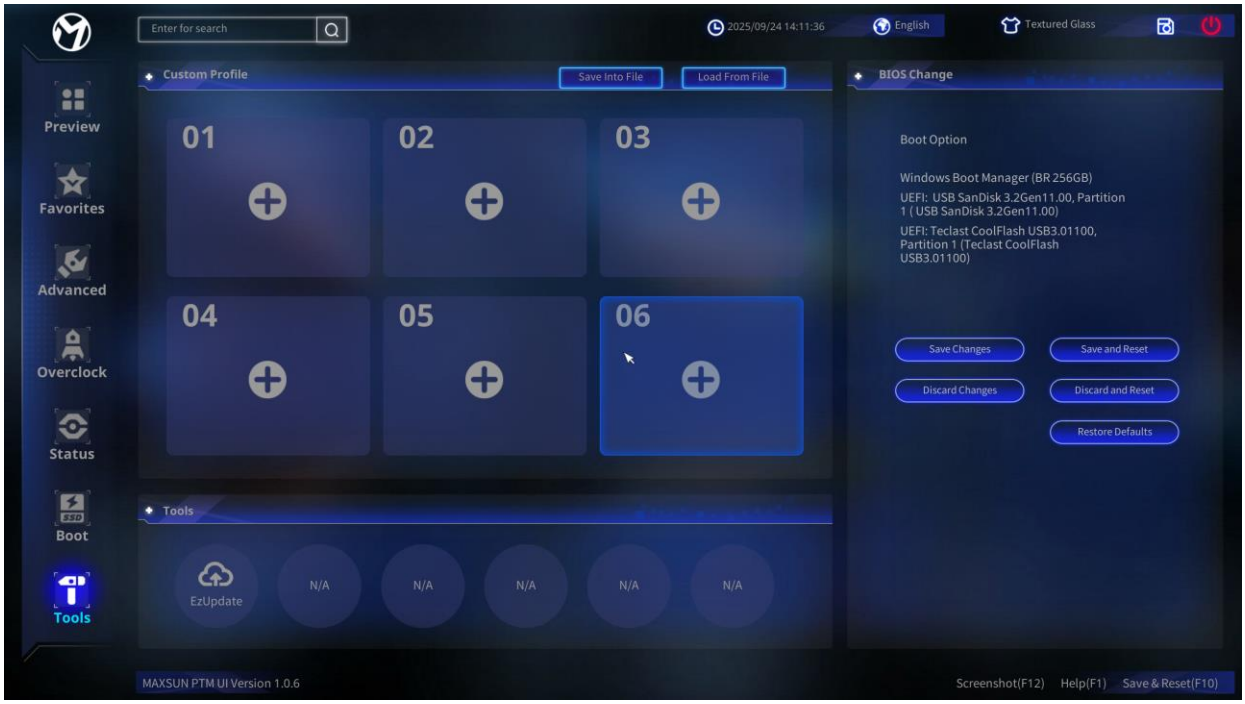

Tools （工具）界面一共分为3个模块，分别为 [用户设定档]、[BIOS变更]、 [BIOS升级]。

[用户设定档]： 用户可保存当前 BIOS 所有设置为设定档，亦可保存为文件，或从已保存的文件中加载设置。

[BIOS变更]： 可选择 [保存/放弃更变]、[保存变更并重启]、[放弃变更并重启]、[加载默认值] 选项，同时还可以直接选择启动项重启进入对应启动项。。

[BIOS升级]： 可从硬盘或 USB 存储设备中，加载该主板的 BIOS 更新文件进行 BIOS 更新。

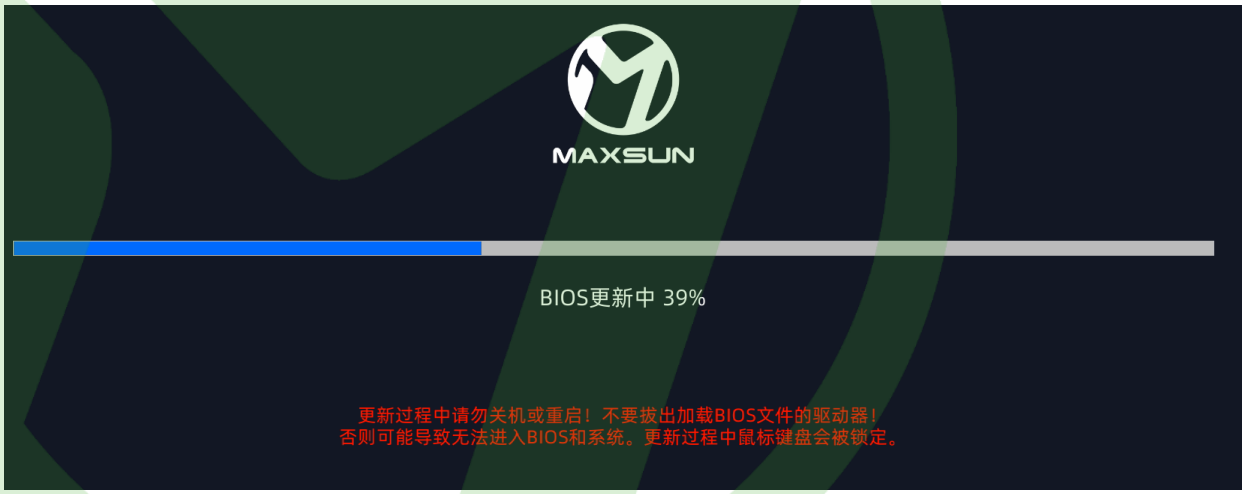

MAXSUN

MS-iCraft B850 AIGA

MAXSUN Motherboard
User Manual

MAXSUN China Official Website: https://www.maxsun.com.cn
MAXSUN Global Official Website: https://www.maxsun.com
Guangzhou Shangke Information Technology Co., Ltd. All Rights Reserved.

Contents

Disclaimer 4
Safety Information 5
FAQ & Helpful Tips 6
Product Diagram 7
Package Contents 7
Specifications 8
Connector Diagram 10
Distributed Debug LEDs 11
Quick Guide 12
Connector Installation Guide 13
- AMD® LGA1718 Processor Installation 13
- AM5 LGA1718 CPU Heatsink Installation 13
- DDR4 / DDR5_DIMM Memory Installation 13
- 24-Pin ATX Power Connector Installation 14
- CPU 8-Pin +12V Power Connector Installation 14
- CPU 4-Pin +12V Power Connector Installation 14
- PCIe X16 Slot Installation 15
- PCIe X4 Slot Installation 15
- PCIe X1 Slot Installation 15
- M.2 (Key_M) Slot Installation 16
- 4-Pin PUMP Header Installation 16
- 4-Pin Chassis Fan Header Installation 16
- USB Type-C® Front Panel Connector Installation 17
- USB 5G Front Panel Header (19-Pin) Installation 17
- USB 2.0 Front Panel Header (9-Pin) Installation 17
- 3-Pin ARGB Header Installation 18
- 4 Pin NRGB Header Installation 18
- SATA Connector Installation 18
- SFF-8654 4i Connector Installation 19
- 10-1 Pin F_PANEL System Panel Header Installation 19
- F_AUDIO Front Panel Audio Header Installation 19

Rear I/O Connector Guide 20
USB 2.0 Type-A Connector 20
USB 3.2 Type-A Connector 20
P/S2 Connector 20
USB Type-C® Connector 20
HDMI™ Connector 20
DisplayPort Connector 20
RJ45 LAN Port 20
Wi-Fi Antenna Connector (External Thread, Inner Pin) 21
5.1-Channel Audio Jacks 21
7.1-Channel Audio Jacks 21
BIOS Guide 22

Disclaimer:

Copyright Notice: The copyright of this manual belongs to MAXSUN Technology Motherboard (referred to as "MAXSUN Motherboard"). MAXSUN Motherboard reserves the right to add or delete content without prior notice to users. This manual is a purely technical document and contains no implied or suggested third-party content. MAXSUN assumes no liability for any ambiguity caused by printing or typesetting errors. All third-party registered trademarks mentioned in this manual are owned by their respective manufacturers or brand suppliers. Copyright 1999-2026. All rights reserved. No reproduction or distribution in any form without authorization.

About This Manual: This manual is intended for beginners and includes an introduction to product features and software installation, as well as explanations of some terms. This manual can be used as a technical reference; please refer to the actual product when using it.

Non-Warranty Coverage:
1. Failures and damages caused by improper use and installation, unauthorized disassembly or replacement of parts, or arbitrary modification of specifications are not covered by the warranty.
2. Any alteration or modification of the product, as well as any damage caused by indirect, special, or accidental circumstances, is not covered by the warranty.

Avoid using this product in the following environments: high temperature, low air pressure, low temperature, humidity, dust, strong magnetic fields, or prolonged exposure to sunlight. The company recommends using the product at an altitude below 3000 meters, a temperature of 0℃ to 35℃, and a humidity of 5% to 95%.

FCC Statement: This device fully complies with Part 15 of the FCC Rules. Operation is subject to the following two conditions:
1. This device may not cause harmful interference;
2. This device must accept any interference received, including interference that may cause undesired operation.

Note: According to Part 15 of the FCC Rules, this device has been tested and found to comply with the limits for a Class B digital device. These limits are designed to provide reasonable protection against harmful interference in a residential installation. This device generates, uses, and can radiate radio frequency energy and, if not installed and used in accordance with the manufacturer's instructions, may cause harmful interference to radio communications. However, there is no guarantee that interference will not occur in a particular installation. If this device does cause harmful interference to radio or television reception, which can be determined by turning the device off and on, the user is encouraged to try to correct the interference by one or more of the following measures:

- Reorient or relocate the receiving antenna;
- Increase the separation between the device and the receiver;
- Connect the computer to an outlet on a circuit different from that to which the receiver is connected;
- If necessary, the user may consult the dealer or an experienced radio/TV technician for additional information;

Warning: To comply with emission limits, shielded interface cables must be used. The user may not make any changes or modifications to this device without explicit approval.

CSC Statement: According to the Radio Interference Regulation established by the Canadian Department of Communications, the radio noise emissions of this device do not exceed the Class B limits.

Safety Information:

- The components included in this package may be damaged by electrostatic discharge (ESD). Please observe the following precautions to ensure successful computer assembly.
- Make sure all components are securely connected. Loose connections may cause the computer to fail to recognize the components or fail to power on.
- When handling the motherboard, hold it by its edges and avoid touching the sensitive components on the motherboard.
- When handling the motherboard, it is recommended to wear an electrostatic discharge (ESD) wrist strap to prevent static electricity from damaging its components. If an ESD wrist strap is not available, discharge static electricity from your body by touching a metal object before handling the motherboard.
- When the motherboard is not installed, place it in an electrostatic shielding container or on an anti-static pad.
- Before turning on the computer, make sure there are no loose screws or metal components on the motherboard or anywhere inside the computer case.
- Do not start the computer before the installation is complete. Otherwise, it may cause permanent damage to the components and injury to the user.
- If you need help during any installation step, please consult a professional computer technician.
- Before installing or removing any computer components, turn off the power and unplug the power cord from the outlet.
- Keep this user guide for future reference.
- Keep this motherboard away from moisture.
- Before connecting the power supply to the power outlet, make sure the outlet provides the same rated voltage as indicated on the power supply.
- Place the power cord where it will not be stepped on, and do not place any objects on the power cord.
- Pay attention to all warning labels on the motherboard.
- If any of the following conditions occurs, have the motherboard checked by service personnel:
    - Liquid has penetrated into the computer. Liquid has penetrated into the computer.
    - The motherboard has been exposed to moisture.
    - The motherboard does not work, or you cannot get it to work after following the user guide.
    - The motherboard has been dropped and damaged.
    - The motherboard shows obvious signs of damage.
- Do not place the motherboard in environments above 60°C (140°F) to avoid damage.

FAQ & Helpful Tips

Memory Slot Installation

For motherboards with two memory slots: when installing one or two memory modules, please use slots A1/B1 first.
For motherboards with four memory slots: when installing one or two memory modules, please use slots A2/B2 first.

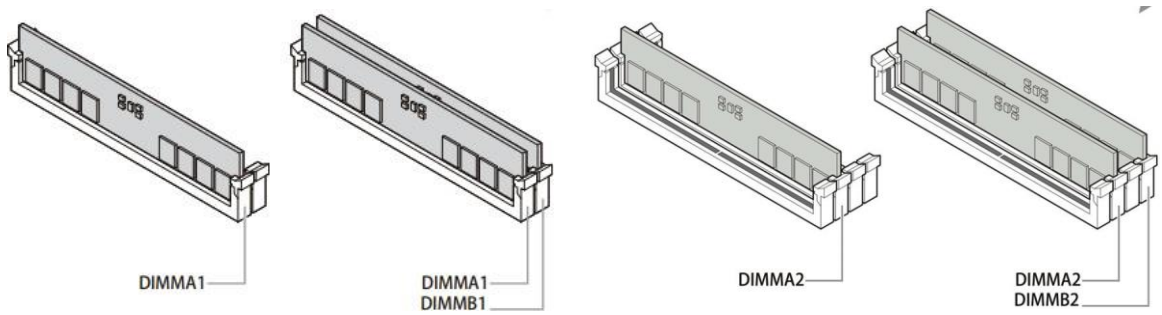

No display on boot / Boot stuck with VGA Debug LED on / Boot QR Code shows d6

Please check whether the graphics card supports UEFI boot mode. If not, please replace it with a graphics card that supports UEFI boot mode.



Booting / Restarting / Entering BIOS directly after OS installation, unable to enter the system

Please check whether the installed system is in UEFI boot format (the disk partition table needs to be GPT). If not, please reinstall the system in UEFI boot format.

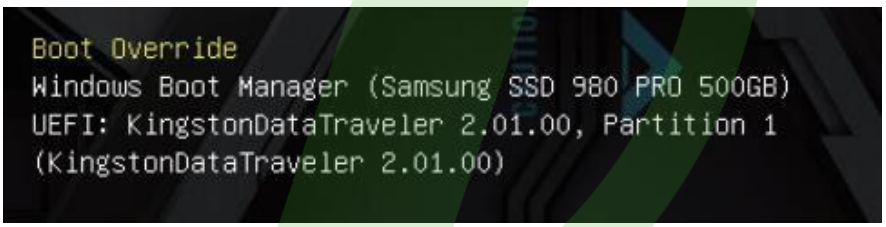

MAXSUN





BOX CONTENT

Model	MS-iCraft B850 AIGA
Data Cable	2 x SATA 6Gb/s Cable
Other Parts	1 x 4-in -1 Screwderiver
	1 x AIGA Acrylic Display Sign
	1 x AIGA Stickers
	1 x M.2 SSD Screws
	1 x Magntic Wi-Fi Antenna
	1 x Warranty Card

Specs

Model	MS-iCraft B850 AIGA
Form Factor	ATX Factor 305mm x 245mm
CPU	AMD AM5 Socket For AMD Ryzen™ 9000/8000/7000 Desktop Processors
Power	16+2+1phase Dr.Mos (Vcore 50A)
Chipset	AMD B850
Memory	4 x DIMM DDR5，Max.256GB Dual Channel Memory Architecture Supports AMD Extended Profiles for Overclocking (EXPO) Supports 8400(OC)/8200(OC)/ 8000(OC)/7600(OC)/7400(OC)/7200(OC)/ 7000(OC)/6800(OC)/6400(OC)/6000(OC)/5600(OC)/4800 Mhz Memory Frequency
Graphics	1 x DisplayPort 1.4 Ports, Supports Max. 4K@60Hz 1 x HDMI™ 2.0 Port, Supports Max. 4K@60Hz * Graphics specifications may vary between CPU types.Please refer to www.AMD.com*
PCI Expansion Slots	**From AMD Ryzen™ 9000/8000/7000 Desktop Processors :** 1 x PCIe X16 Slot (Supports PCIe 5.0 X16 Mode) - Supports PCIe 5.0 x16 operating specification when equipped with AMD Ryzen™ 7000/9000 processors; - Supports PCIe 4.0 x8/x4 operating specification when equipped with AMD Ryzen™ 8000 processors; 1 x PCIe X16 Slot (Supports PCIe 5.0 X8/X4+X4 Mode;Requires PCIeX16_A slot to enable lane splitting,Once activated, the PCIeX16_A slot speed changes to X8 mode.) - Supports PCIe 5.0 X8/X4+X4 operating specification when equipped with AMD Ryzen™ 7000/9000 processors; - This slot is disabled when equipped with an AMD Ryzen™ 8000 processor.; **From AMD B850 Chipset :** 1 x PCIe X1 Slot (Supports PCIe 3.0 X1 Mode)
Storage	**Total Supports 4 x M.2 Slots and 2 x SATA 6Gb/s Ports** **From AMD Ryzen™ 9000/8000/7000 Desktop Processors :** M.2_A Slot (Key_M) : Supports PCIe 5.0 X4/X2 Mode，Type 2242 / 2280 / 22110 - Supports PCIe 5.0 x4 operating specification when equipped with AMD Ryzen™ 7000/9000 processors; - Supports PCIe 4.0 x4/x2 operating specification when equipped with AMD Ryzen™ 8000 processors; M.2_B Slot (Key_M) : Supports PCIe 5.0 X4/X2 Mode，Type 2242 / 2280 / 22110 - Supports PCIe 5.0 x4 operating specification when equipped with AMD Ryzen™ 7000/9000 processors; - Supports PCIe 4.0 x4/x2 operating specification when equipped with AMD Ryzen™ 8000 processors; **From AMD B850 Chipset :** M.2_C Slot (Key_M) : Supports PCIe 4.0 X4/X2 Mode，Type 2242 / 2280 / 22110 M.2_D Slot (Key_M) : Supports PCIe 4.0 X4/X2 Mode，Type 2242 / 2280 / 22110 2 x SATA 6Gb/s Ports
Ethernet	1 x Realtek RTL8125D 2.5Gb Ethernet Lan 1 x MTK MT7925 Wireless-Card : Support Wi-Fi 7 or Bluetooth® v5.4
Audio	Realtek ALC1220 High Definition Audio CODEC

USB Ports	**Front USB (Total 6 Ports)：** 1 x USB-C® 20G Front_Ports 1 x USB 5G 19-Pin Header ,Supports 2 additional USB 5G Ports 1 x USB 2.0 9-Pin Header, Supports 2 additional USB 2.0 Ports 1 x USB 2.0 4-Pin Header, Supports 1 additional USB 2.0 Ports **Rear USB (Total 9 Ports)：** 1 x USB 10G Type-C® Ports(Supports up to PD 15W power and DisplayPort 1.4 Max. 4K@60Hz output) 4 x USB 10G Type-A Ports 4 x USB 2.0 Type-A Ports
Back Panel I/O Ports	4 x USB 2.0 Type-A Ports 1 x HDMI™ 2.0 Ports 1 x DisplayPort 1.4 Ports 1 x CLR_CMOS/BIOS FLASH Buttons 1 x USB 10G Type-C® Ports(Supports up to PD 15W power and DisplayPort 1.4 Max. 4K@60Hz output) 4 x USB 10G Type-A Ports 1 x Realtek 5Gb Ethernet LAN 1 x Wi-Fi Antenna 5 x Audio jacks + 1 x SPDIF
Internal I/O Connectors	**Power related** 1 x 24 Pin ATX Main Power Connector 2 x 8 Pin +12V Power Connector **Fan and Cooling related** 1 x 4 Pin CPU_FAN Header 1 x 4 Pin PUMP Header (Support DC Speed Control) 1 x 4 Pin MEM_FAN Header 3 x 4 Pin SYS_FAN Header **Storage related** 4 x M.2 Slots(Key_M) 2 x SATA 6Gb/s Ports **Front USB** 1 x USB-C® 20G Front_Ports 1 x USB 5G 19-Pin Header ,Supports 2 additional USB 5G Ports 1 x USB 2.0 9-Pin Header, Supports 2 additional USB 2.0 Ports 1 x USB 2.0 4-Pin Header, Supports 1 additional USB 2.0 Ports **Miscellaneous** 3 x 3 Pin ARGB Header 1 x 4 Pin NRGB Header 1 x COM Port Header 1 x Front_Audio Header 1 x 10-1 Pin System Panel Header 1 x CLR_CMOS Header
Operating System	Windows® 11，Windows® 10 64-bit
Featured Functions	Separate Debug LEDs Maxsun Sync CLR_CMOS Buttons BIOS FLASH Buttons

Connectors

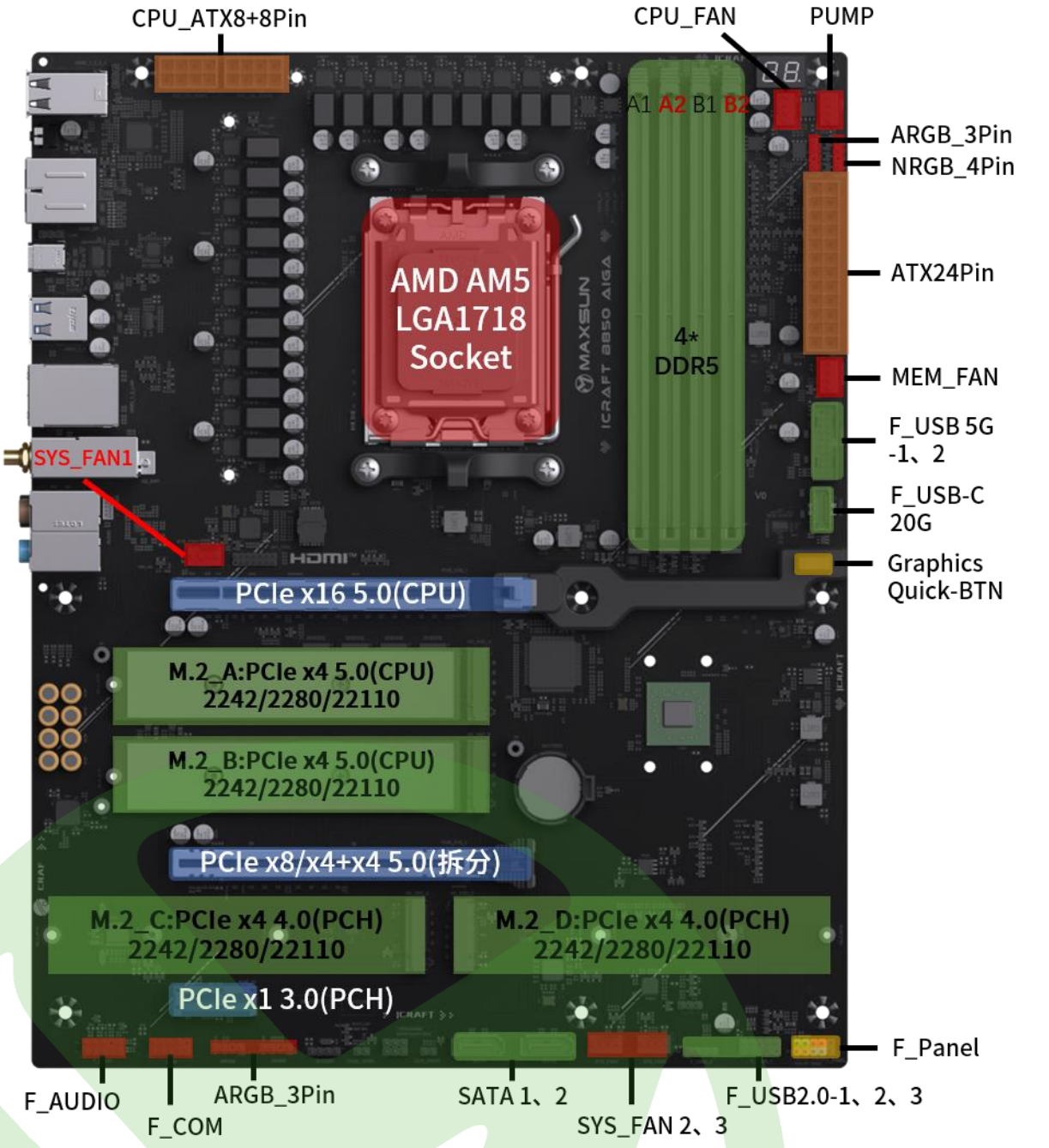
CPU_ATX8+8Pin
CPU_FAN
PUMP
A1 A2 B1 B2
ARGB_3Pin
NRGB_4Pin
ATX24Pin
MEM_FAN
F_USB 5G -1、2
F_USB-C 20G
Graphics Quick-BTN
SYS_FAN1
AMD AM5 LGA1718 Socket
4* DDR5
PCIe x16 5.0(CPU)
M.2_A:PCIe x4 5.0(CPU) 2242/2280/22110
M.2_B:PCIe x4 5.0(CPU) 2242/2280/22110
PCIe x8/x4+x4 5.0(拆分)
M.2_C:PCIe x4 4.0(PCH) 2242/2280/22110
M.2_D:PCIe x4 4.0(PCH) 2242/2280/22110
PCIe x1 3.0(PCH)
F_Panel
F_AUDIO
F_COM
ARGB_3Pin
SATA 1、2
SYS_FAN 2、3
F_USB2.0-1、2、3

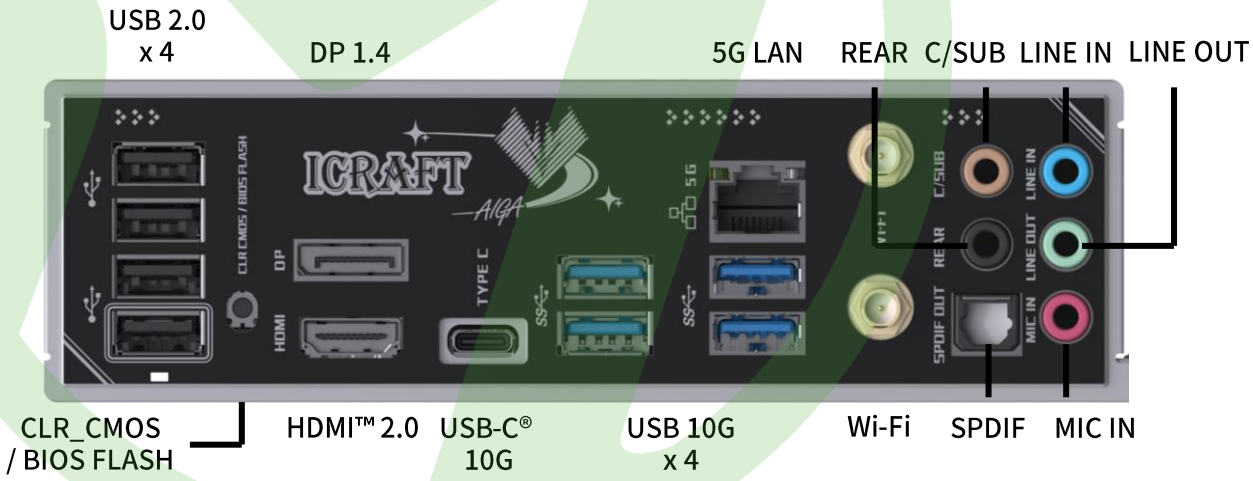
USB 2.0 x 4
DP 1.4
5G LAN
REAR
C/SUB
LINE IN
LINE OUT
CLR_CMOS / BIOS FLASH
HDMI™ 2.0
USB-C® 10G
USB 10G x 4
Wi-Fi
SPDIF
MIC IN

Distributed Debug LED Sequence

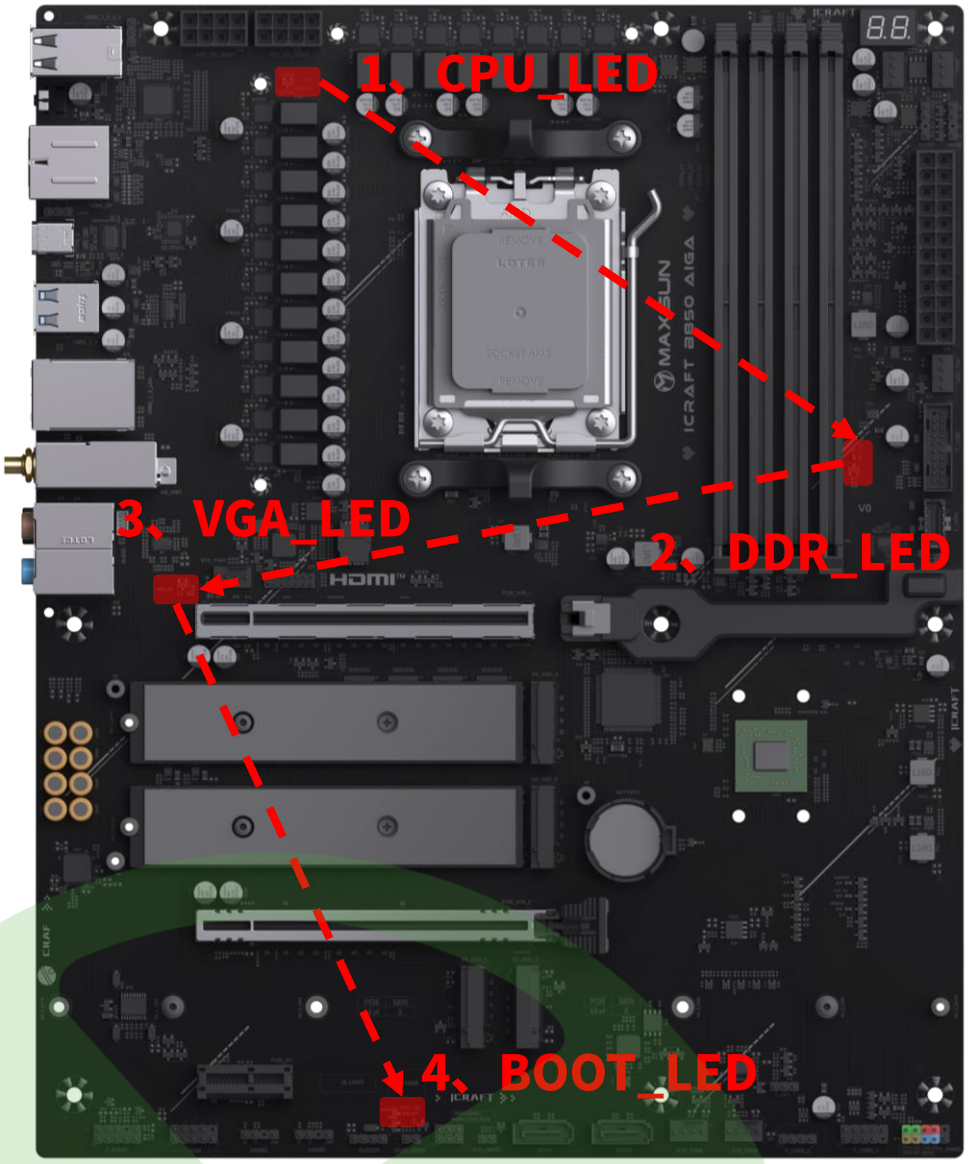

CPU_LED → DDR_LED → VGA_LED → BOOT_LED

1. A constantly lit CPU_LED indicates the CPU cannot be detected or is faulty. Please check whether the CPU is damaged or whether the contacts on the back of the CPU are contaminated (e.g., with thermal paste);

2. A constantly lit DDR_LED indicates the memory cannot be detected or is faulty. Please check whether the memory is faulty or whether overclocking parameters (such as voltage, timings, frequency, etc.) have been modified;

3. A constantly lit VGA_LED indicates the graphics card cannot be detected or is faulty. Please check whether the graphics card is faulty, whether the graphics card power connector/display output connector is not properly connected, or whether the graphics card is incompatible with UEFI boot mode;

4. A constantly lit BOOT_LED indicates the boot device cannot be detected or is faulty. Please check whether the boot device is damaged or whether there is no boot device;

Quick Guide:

Thank you again for purchasing and using MAXSUN products. Next, we will introduce the common connectors on the motherboard and how to install and use them. Before getting started, please make sure you have the following components and tools ready:

- AMD® AM5 LGA1718 Ryzen 7000/8000/9000 Series Processor
- AMD® AM5 LGA1718 600/800 Series Motherboard
- AM5 LGA1718 CPU Heatsink & Thermal Paste
- DDR5 U-DIMM Memory
- M.2 SSD / SATA Drive
- PCIe x16 Graphics Card (not required if the CPU has integrated graphics)
- Computer Case
- PC Power Supply compliant with ATX 3.0 or above with a valid 3C certification
- Screws & Screwdriver for Assembly (screws commonly used for desktop assembly are 'M3' & '#6' Specifications)

Connector Installation Guide

• AMD® AM5 LGA1718 Processor Installation

Supports AMD® AM5 LGA1718 Ryzen processors only. The socket has a fool-proof design; pay attention to the fool-proof notches when installing the processor to avoid damaging the processor and the socket.

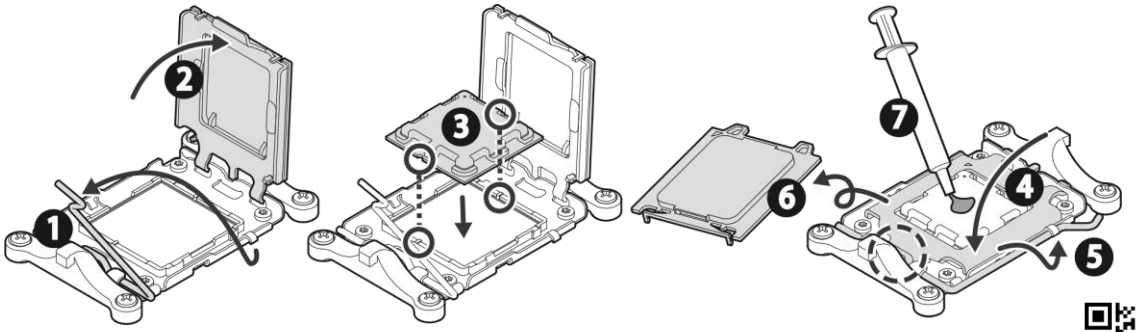

AMD AM5 LGA1718 CPU Installation Tutorial Video:
https://www.bilibili.com/video/BV16m421L7X4/

You can also scan the QR code to view

• AMD AM5 LGA1718 CPU Heatsink Installation

Only supports heatsinks with AM5 LGA1718 mounting hole spacing. Do not force-install heatsinks with other hole spacing to avoid unnecessary damage and malfunction. After installing the cooler, remember to connect the 4-Pin fan power header to prevent CPU overheating damage caused by the fan not working properly.

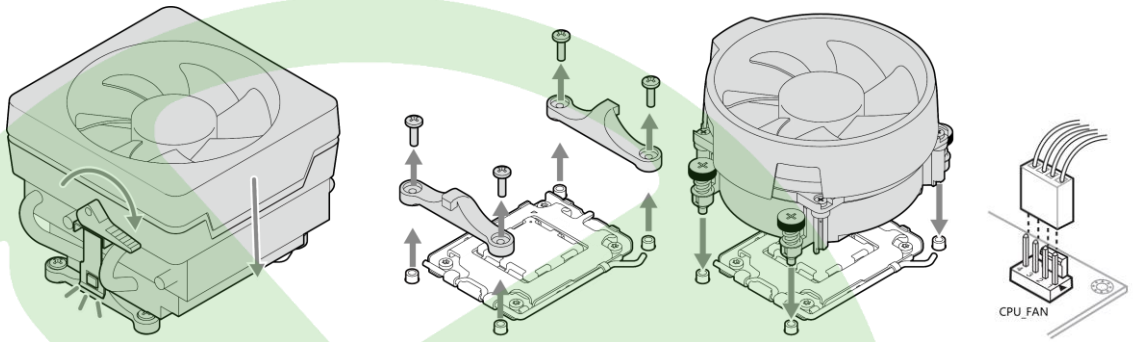

• DDR4 / DDR5_DIMM Memory Installation

Supports U-DIMM memory modules only. DDR5 memory supports 4800MHz by default; the slots have a fool-proof insertion design, do not insert or remove by force.

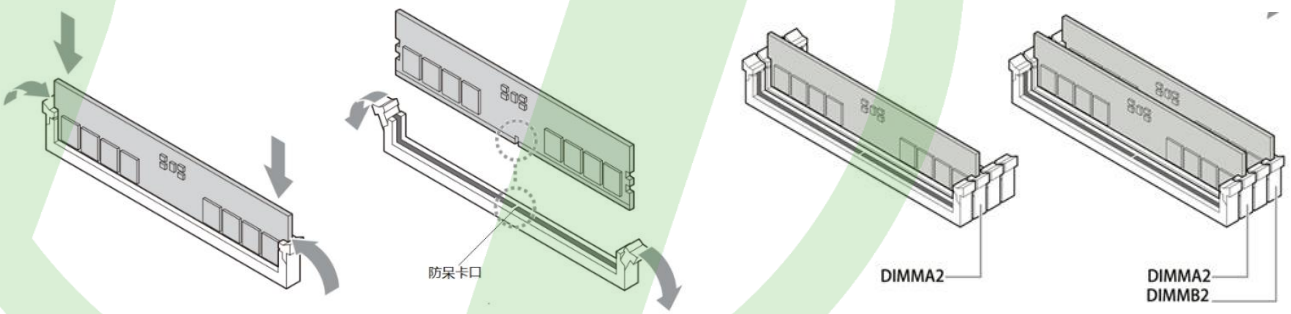

Connector Installation Guide

- 24-Pin ATX Power Connector Installation

Used to connect the 12V, 5V, and 3.3V power required by the motherboard 24-Pin connector. The socket has a fool-proof insertion design.

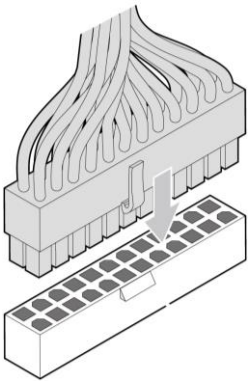

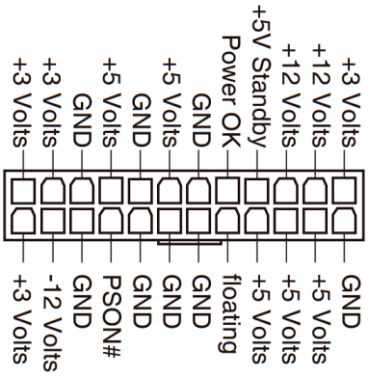

- CPU 8-Pin +12V Power Connector Installation

Used to connect the CPU +12V power supply. The connector has a fool-proof insertion design. If the CPU +12V power connectors on the motherboard are 8+8 Pin, be sure to fully plug in all 8+8 Pin connectors to prevent unnecessary hardware damage caused by cable overheating.

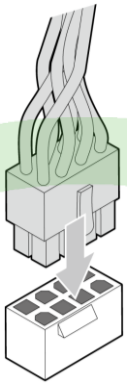

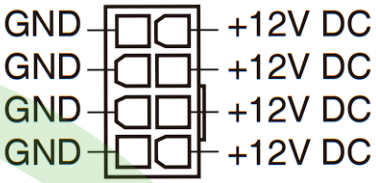

- CPU 4-Pin +12V Power Connector Installation

Used to connect the CPU +12V power supply. The connector has a fool-proof insertion design. If the CPU +12V power connectors on the motherboard are 8+4 Pin, be sure to fully plug in all 8+4 Pin connectors to prevent unnecessary hardware damage caused by cable overheating.

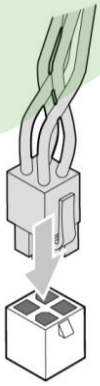

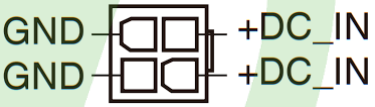

Connector Installation Guide

- PCIe X16 Slot Installation

Used to install full-length PCIe X16 devices; recommended for installing discrete graphics cards.

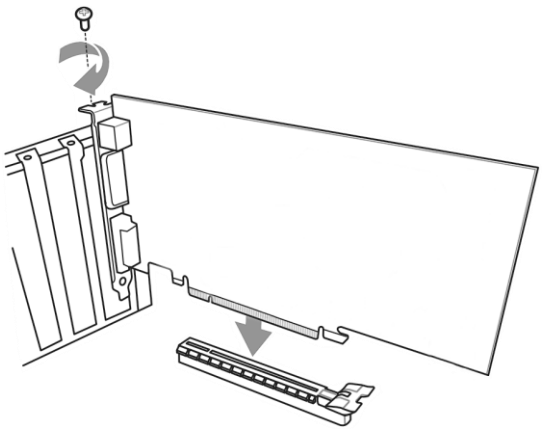

- PCIe X4 Slot Installation

Used to install PCIe X4 devices.

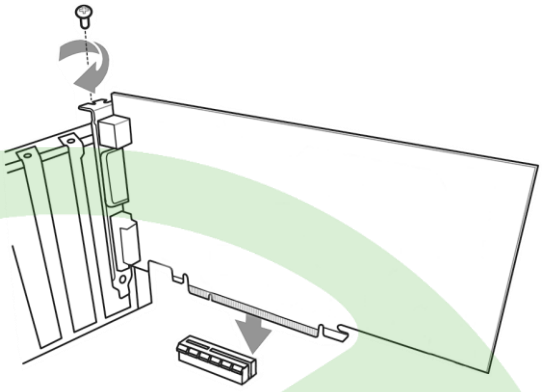

- PCIe X1 Slot Installation

Used to install PCIe X1 devices.

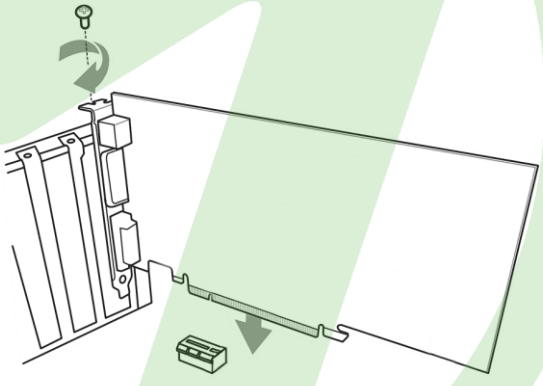

Connector Installation Guide

- M.2 (Key_M) Slot Installation

Used to install M.2 storage devices. Different models have different length compatibility; when installing, please secure the fixing screws as shown in the figure below to prevent unnecessary damage or data loss caused by poor contact during use.

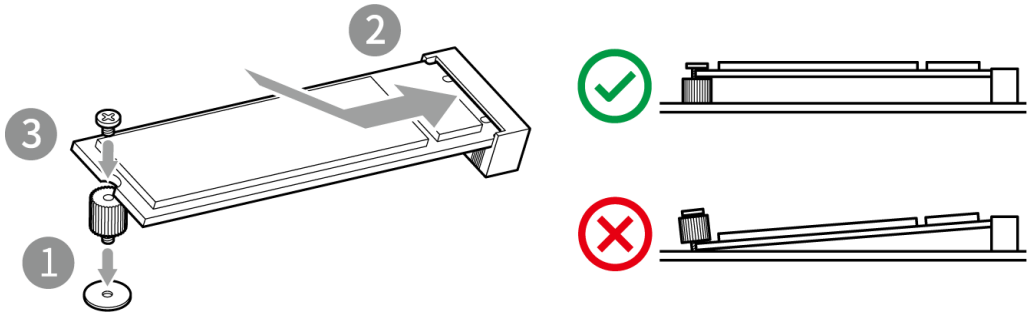

- 4-Pin PUMP Header Installation

Used to connect the pump power of the CPU liquid cooler. Be sure to connect it, otherwise hardware damage may occur because CPU heat cannot be dissipated. The connector has a fool-proof design and supports PWM mode.

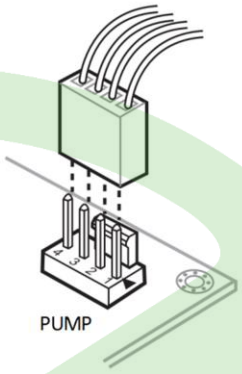

- 4-Pin Chassis Fan Header Installation

Used to connect 4-Pin cooling fans. Be sure to connect them, otherwise hardware damage may occur because heat inside the case cannot be dissipated. The connector has a fool-proof design and supports PWM mode.

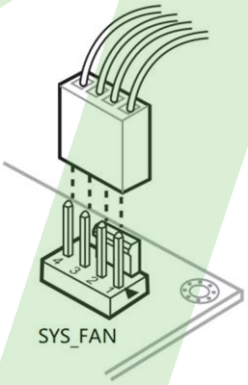

Connector Installation Guide

- USB Type-C® Front Panel Connector Installation

Used to connect a Type-C® module, which can expand front panel Type-C® connectors and rear Type-C® expansion connectors.

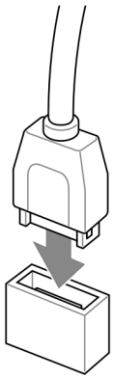

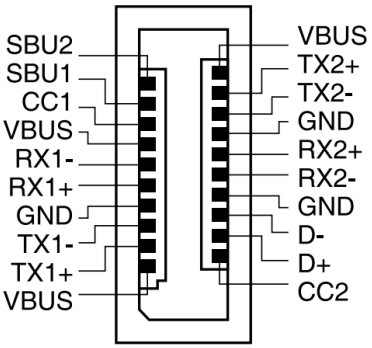

- USB 5G Front Panel Header (19-Pin) Installation

Used to connect a USB 5G module. One header can expand 2 front panel USB 5G connectors and rear USB 5G expansion connectors. The connector protocol is USB 3.2 Gen 1, with a maximum data transfer rate of 5Gb/s.

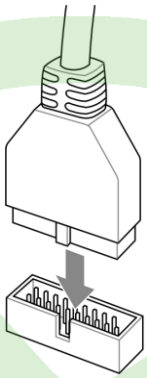

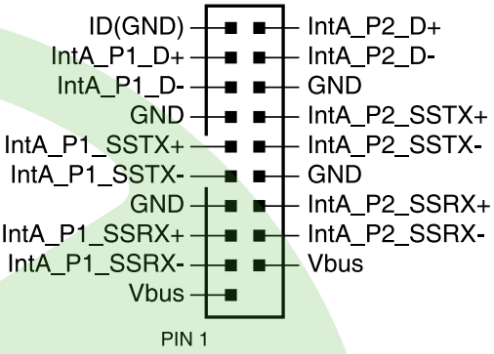

- USB 2.0 Front Panel Header (9-Pin) Installation

Used to connect a USB 2.0 module. One header can expand 2 front panel USB 2.0 connectors and rear USB 2.0 expansion connectors. The connector protocol is USB 2.0 (480M), with a maximum data transfer rate of 480Mb/s.

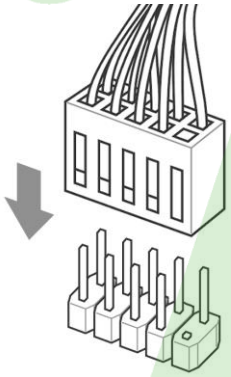

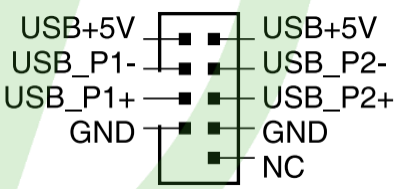

Connector Installation Guide

- 3-Pin ARGB Header Installation

Used to connect 3-Pin ARGB lighting devices. The lighting effect is off by default and supports lighting control in BIOS and via the MAXSUN SYNC software in the OS. Please note that this header is not compatible with 4-Pin RGB devices; incorrect insertion may damage the device. Please distinguish them carefully.

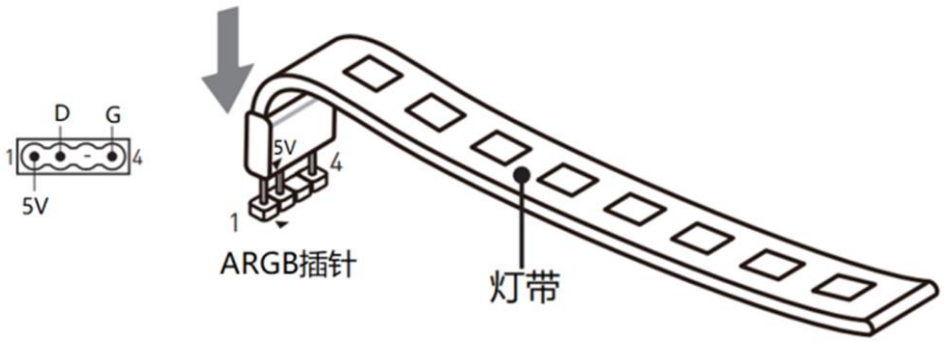

- 4-Pin ARGB Header Installation

Used to connect 4-Pin NRGB lighting devices. The lighting effect is off by default and supports lighting control in BIOS and via the MAXSUN SYNC software in the OS. Please note that this header is not compatible with 3-Pin ARGB devices; incorrect insertion may damage the device. Please distinguish them carefully.

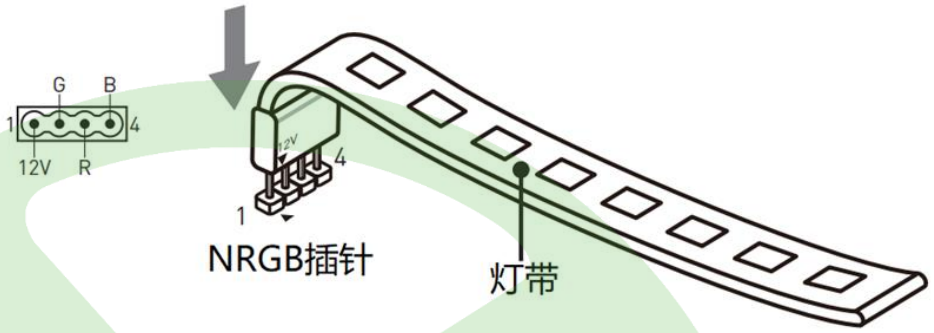

- SATA Connector Installation

Used to connect SATA devices. Use a SATA data cable to connect the SATA device to the SATA connector on the motherboard. The maximum connector speed is 6 Gb/s. Some SATA devices (such as SATA hard drives) also require an additional power cable.

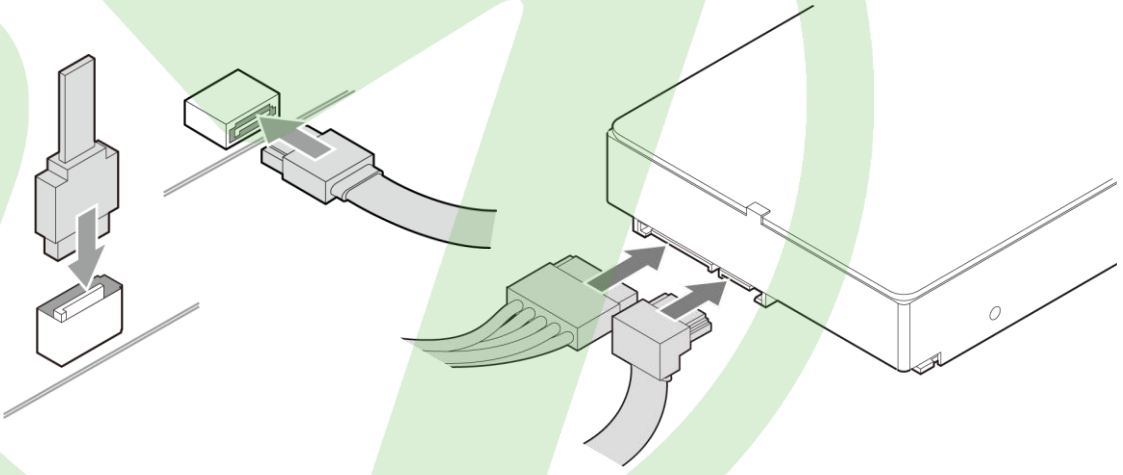

Connector Installation Guide

- SFF-8654 4i Connector Installation

Different Slim SAS cables can be used to connect the SFF-8654 4i connector

— Can be adapted to a U.2 connector, supporting up to PCIe 4.0 X4 mode NVMe protocol devices (please refer to the motherboard specifications for details)

— Can be adapted to up to 4 SATA connectors for simultaneous use of 4 SATA devices (please refer to the motherboard specifications for details)

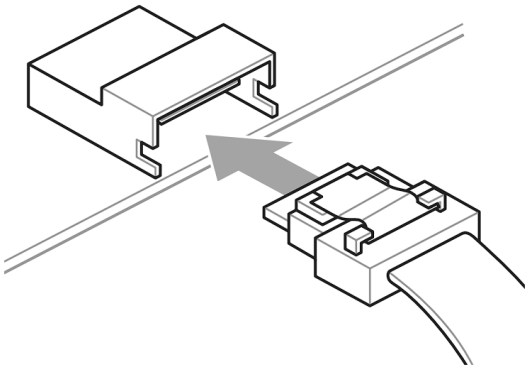

- 10-1 Pin F_PANEL System Panel Header Installation

Front panel header for connecting the case power button, reset button, power LED, and HDD LED.

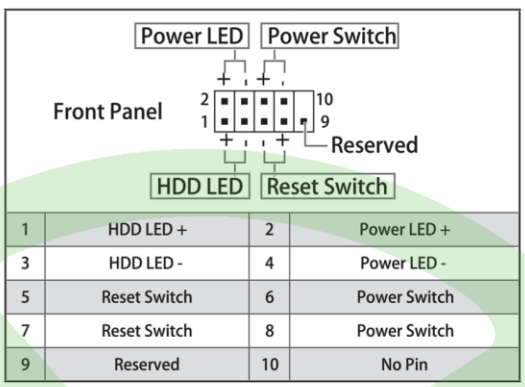

1	HDD LED +	2	Power LED +
3	HDD LED -	4	Power LED -
5	Reset Switch	6	Power Switch
7	Reset Switch	8	Power Switch
9	Reserved	10	No Pin

- F_AUDIO Front Panel Audio Header Installation

Front panel audio header for connecting the case front panel audio module.

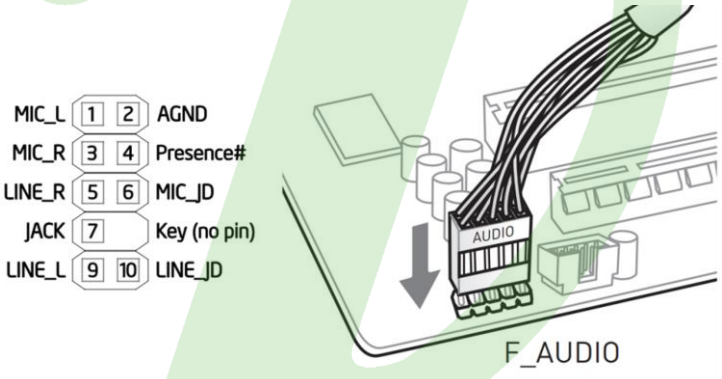

Rear I/O Connector Guide

- USB 2.0 Type-A Connector

Used to connect USB Type-A devices. The connector protocol is USB 2.0 (480M), with a maximum data transfer rate of 480Mb/s. Recommended for connecting USB Type-A devices that do not require high transfer speeds, such as keyboards, mice, and USB headsets.



- USB 3.2 Type-A Connector

Used to connect USB Type-A devices. The connector protocol varies by motherboard design; please refer to the motherboard specifications for details. Recommended for connecting USB Type-A devices that require higher transfer speeds, such as USB flash drives and portable hard drives.

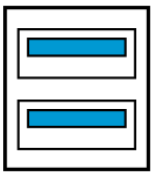

- P/S2 Connector

Used to connect P/S2 keyboard and mouse devices.

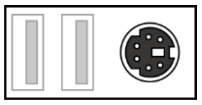

- USB Type-C® Connector

Used to connect USB Type-C® devices. The connector protocol varies by motherboard design; please refer to the motherboard specifications for details. Recommended for connecting USB Type-C® devices that require higher transfer speeds, such as USB flash drives and portable hard drives.

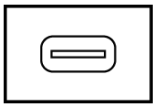

- HDMI™ Connector

Used to connect HDMI™ display devices. The connector protocol version varies by motherboard design; please refer to the motherboard specifications for details.



- DisplayPort Connector

Used to connect DisplayPort display devices. The connector protocol version varies by motherboard design; please refer to the motherboard specifications for details.



- RJ45 LAN Port

Used to connect RJ45 LAN cables. The port speed varies by motherboard design; please refer to the motherboard specifications for details.

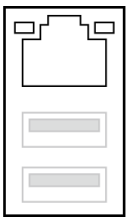

RJ45 LAN Port LED Status Indicators

Activity Link LED	
Status	Description
BLINKING	Data activity
OFF	No link

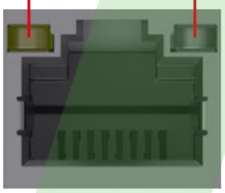

Speed LED	
Status	Link Speed
OFF	No Link
GREEN	100 Mbps connection
ORANGE	1 / 2.5 / 5 / 10 Gbps connection

Rear I/O Connector Guide

- Wi-Fi Antenna Connector (External Thread, Inner Pin)

Used to connect a Wi-Fi antenna. Please use a Wi-Fi antenna with a male connector (inner thread, outer pin).



- 5.1-Channel Audio Jacks

-Used to connect audio devices.
-The MIC-IN jack (light pink) is used to connect input devices such as microphones;
-The LINE-OUT jack (light green) is used to connect audio output devices such as speakers;
-The LINE-IN jack (light blue) is used to connect audio input devices;

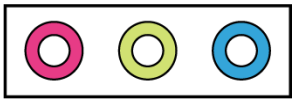

- 7.1-Channel Audio Jacks

-Used to connect audio devices.
-The MIC-IN jack (light pink) is used to connect input devices such as microphones;
-The LINE-OUT jack (light green) is used to connect audio output devices such as speakers;
-The LINE-IN jack (light blue) is used to connect audio input devices;
-The C/SUB jack (light orange) is used to connect the center/subwoofer channel;
-The REAR jack (light gray) is used to connect the surround sound channels;
-The SPDIF OUT optical connector is used to connect devices with corresponding connectors such as amplifiers, decoders, and projectors;

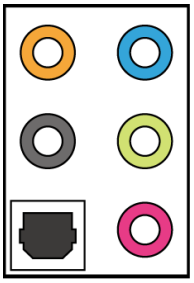

BIOS Overview

1. BIOS Introduction

1.1 BIOS Description

BIOS stands for Basic Input/Output System. When you turn on your computer, the BIOS is the first program to run. Modified BIOS settings are stored in battery-backed CMOS RAM to ensure that the BIOS settings are not lost when the system power is cut off. Under normal circumstances, there is no need to modify the BIOS when the system is running properly. If CMOS data is lost due to battery depletion, replace the battery and reconfigure the BIOS settings.

Note: BIOS interface options and functions may vary depending on the actual version. Please refer to the actual version.

2. BIOS Operation Instructions

2.1 Entering BIOS Setup

To enter the BIOS setup screen, follow these steps:

Turn on the power or restart the system, and wait until the screen displays Press <DEL> to enter setup;

Press the <DEL> key to enter the BIOS setup program.

2.2 BIOS Mouse Operation

Left Button → Select

2.3 BIOS Keyboard Operation

↑ ↓ → ← : Move Cursor
Enter : Select/Confirm
+ / - : Modify Option
F1 : Help
F3 : Fan Control
F4 : Favorites
F5 : Search
F6 : User Settings
F7 : Previous Settings
F8 : EzUpdate
F9 : Load Defaults
F10 : Save and Restart
F11 : Back to Preview
F12 : Screenshot
Insert : Add/Remove Favorite
Home : Back to Main Menu

3. Interface Introduction

3.1 BIOS Interface:

The BIOS interface is divided into five functional areas: [Main Menu Bar], [Function Options Area], [Option Description Area], [Top Search Box], and [Top Function Buttons].

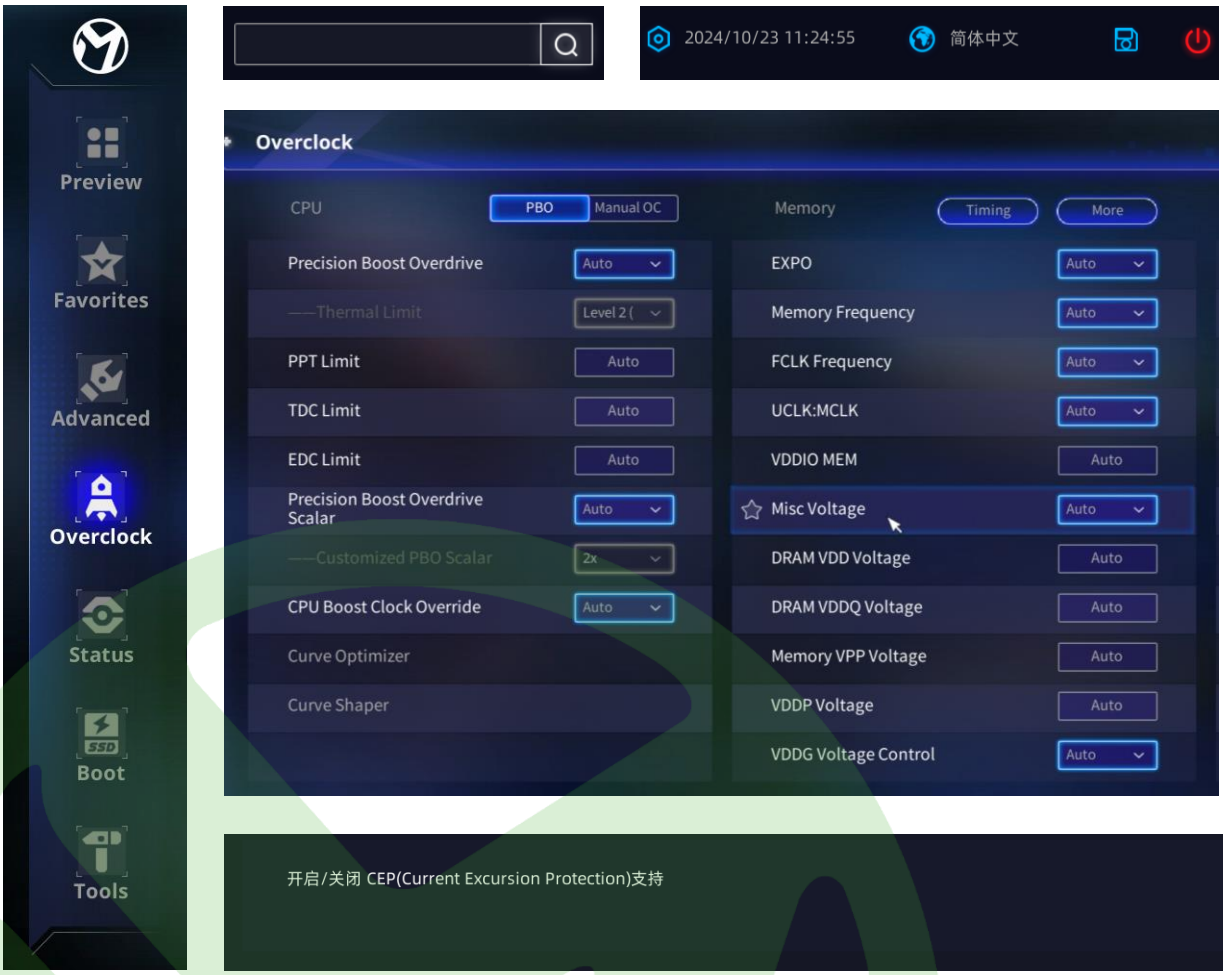

The main menu bar provides access to seven interfaces: Preview, Favorites, Advanced, Overclock, Status, Boot, and Tools;）；

The Advanced, Overclock, and Boot interfaces all have a function options area;

Interfaces with a function options area have an option description area below, explaining the function of each option and available values;

The top search box can be clicked to search for options (search input supports English only, but the displayed option language follows the currently selected BIOS language);

The top function buttons are: [BIOS Time Settings], [BIOS Language Selection], [Exit BIOS Interface], and [Power Off Function];]

3.2 Search Interface:



Click the [Search Box] to search for options (search input supports English only, but the displayed option language follows the currently selected BIOS language).

3.3 Exit BIOS Interface:



Click the [Exit BIOS] button at the top to enter the [Exit BIOS Interface], where you can select [Save/Discard Changes], [Save Changes and Restart], [Discard Changes and Restart], and [Load Defaults]. You can also directly select a boot device to restart into it.

3.3 Save Changes and Restart:





Click [Save Changes and Restart] in [Exit BIOS] or press [F10] during BIOS operation to pop up the [Save Changes and Restart] interface. In this interface, you can review all option changes made during this BIOS session and make further changes to option values. After confirming, click [Yes] to save changes and restart; click [No] to exit this interface.

3.4 BIOS Time Settings:





Click the [BIOS Time Settings] button to enter the BIOS time settings interface and configure the BIOS time.

BIOS Interfaces & Features Introduction

1. Preview



The Preview interface is divided into 8 modules: [Function Switches], [Performance Mode], [Memory Status], [CPU Status], [Fan Settings], [Boot Priority], [Hardware Status], and [Basic Information].

1.1 Function Switches



In the [Function Switches] module, there are 4 shortcut function buttons: [EXPO], [ReSize Bar], [EUP], and [RGB]. Click a shortcut to enable the corresponding function, and the related options will change accordingly.

1.2 Performance Mode



In the [Performance Mode] module, there are 3 performance preset options: [Default], [Performance Mode], and [Game Mode]. After clicking a performance preset, options such as [cTDP], [PBO], [CCD Switch], and [SMT Control] in BIOS will change accordingly.

1.3 Memory Status



The [Memory Status] module displays in real time what memory is installed in the motherboard's memory slots and in which slot, and can read basic SPD information of the memory. There is a [Memory Slot Warning] function in the upper right corner of the interface; when enabled, if the system detects that the memory is not installed in the optimal slot, it will automatically enter BIOS at boot and pop up a reminder, as shown in the figure below.

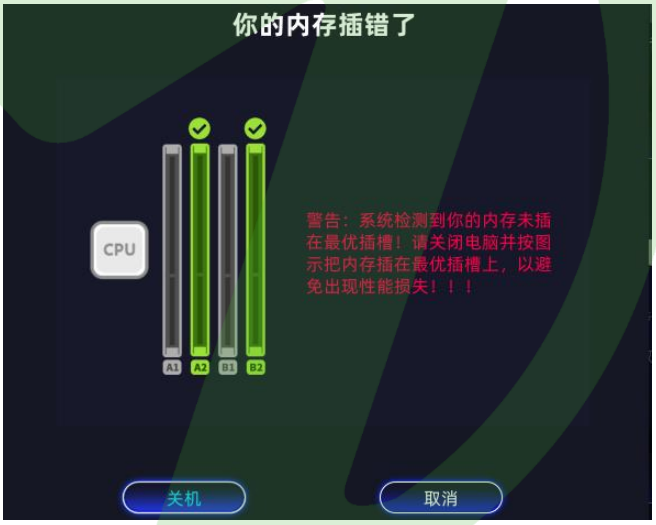

1.4 CPU Status



The [CPU Status] module displays basic information about the currently installed CPU, such as CPU model, cores/threads, CPU frequency, CPU microcode, and integrated graphics model.

1.5 Fan Status and Settings



[The [Fan Settings] module displays in real time the speed of the fans currently installed on the motherboard. Click the [Fan Settings] button in the upper right corner of the interface to enter the [Fan Curve Adjustment] interface.。

1.6 Boot Priority



In the [Boot Priority] module, you can adjust the first boot priority of devices by dragging icons with the mouse or using the keyboard +/- keys.

1.7 Hardware Status



The [Hardware Status] module displays in real time important information about the current motherboard's CPU, memory, and voltages, including frequency, temperature, memory timings, and various voltages.

1.8 Basic Information

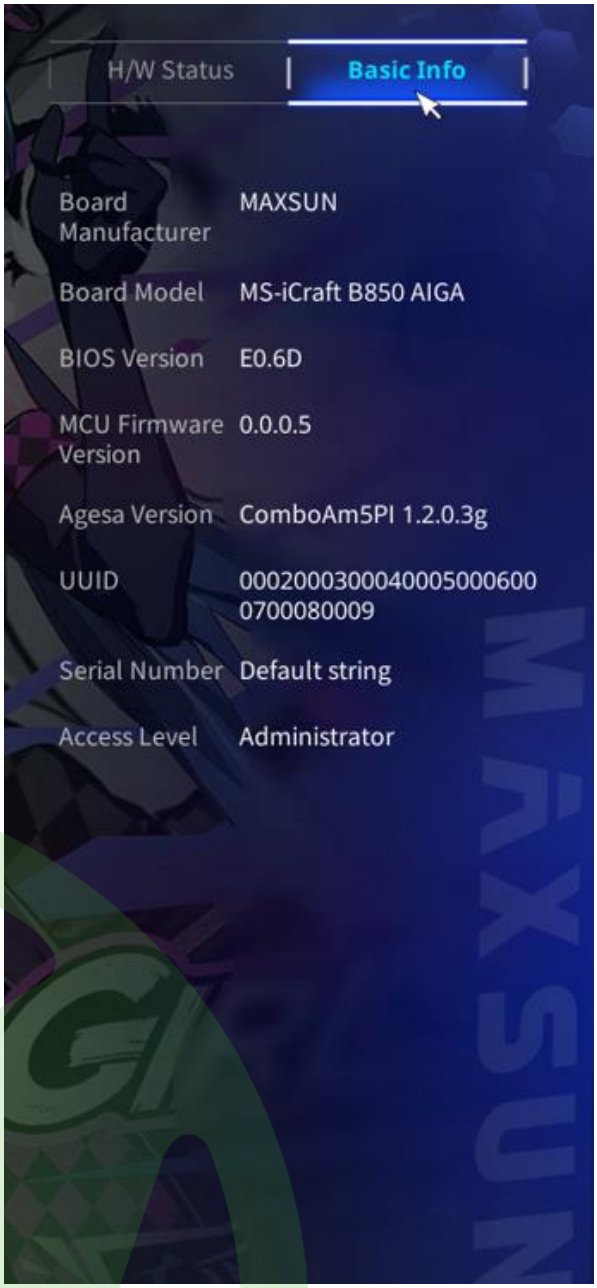

The [Basic Information] module displays basic information about the current motherboard, such as motherboard model and BIOS version.

1.9 Fan Curve Adjustment



The [Fan Curve Adjustment] interface can be accessed from the [Fan Settings] module on the [Preview] interface or the [Fan Settings] module on the [Status] interface. In this interface, users can set the fan curves for fans installed on the motherboard. You can choose from 4 official presets: Standard, Silent, Performance, and Full Speed, or manually customize the fan curve.
After setting the curve for one fan, you can use the [Apply to All Fans] button on the right to apply the curve to all fans installed on the motherboard.
In this interface, you can enable [CPU Fan Fail Warning]. When enabled, if the system detects that no fan is installed on the motherboard CPU_FAN header, it will automatically enter BIOS at boot and pop up a reminder, as shown in the figure below.

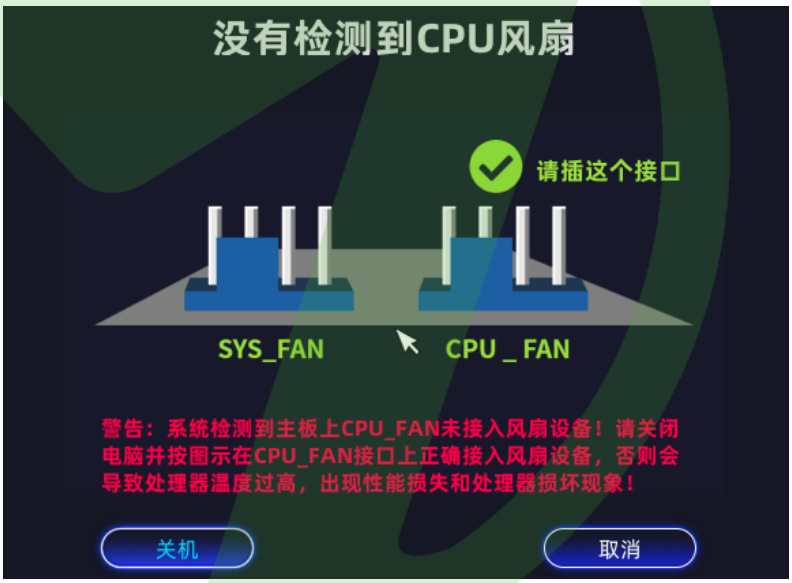

2. Favorites

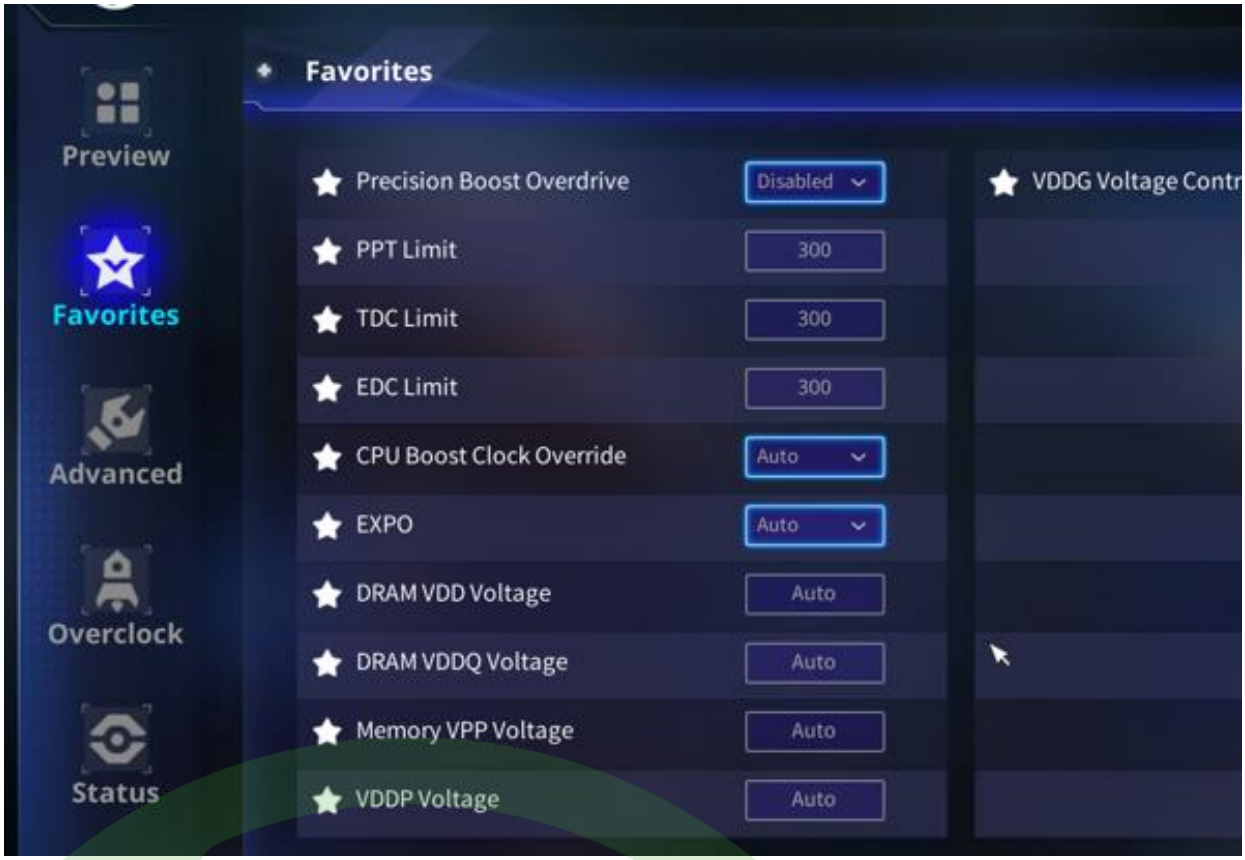

The Favorites interface displays the options currently favorited by the user in BIOS, and option settings can be configured in this interface.

Click the gray star in front of an option in BIOS; when it lights up white, the option has been successfully favorited. 

When the user wants to unfavorite an option, find the favorited option or enter the Favorites interface, and click the white star in front of the option to return it to the gray initial state, which removes it from favorites.

3. Advanced

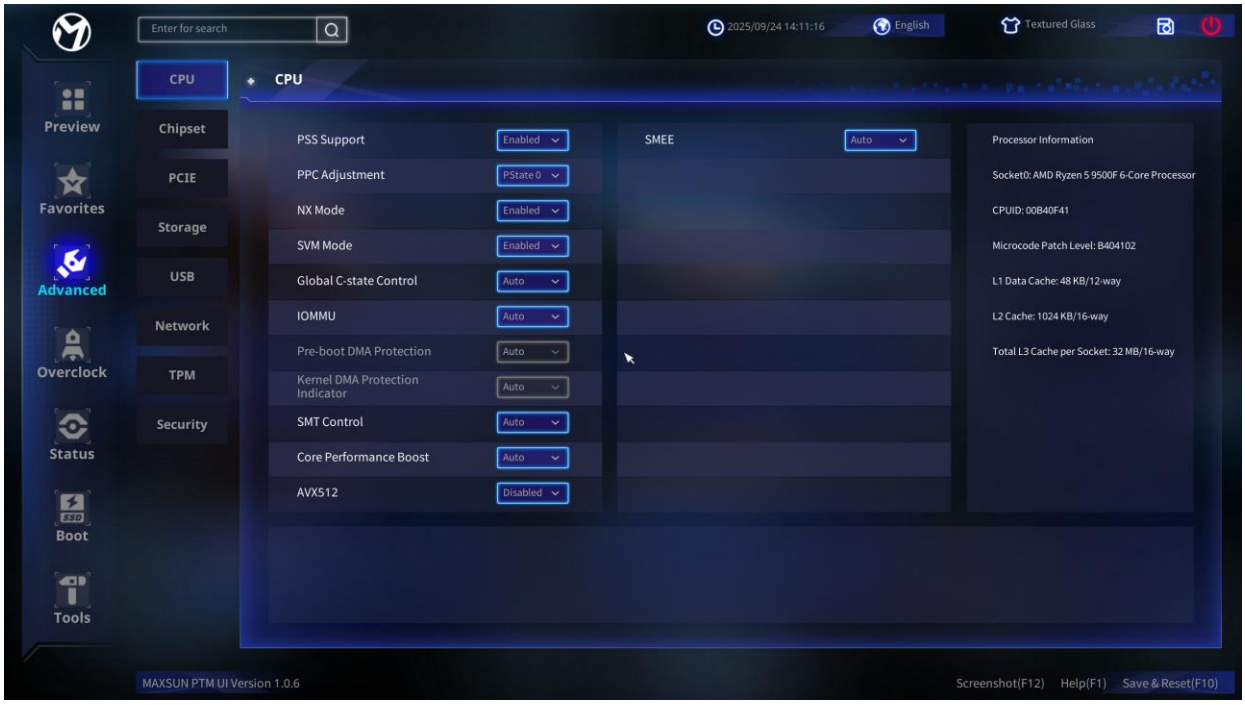

The Advanced interface is divided into 8 submenus: [CPU Settings], [Chipset Settings], [PCIE Settings], [Storage Settings], [USB Settings], [Network Stack], [TPM Settings], and [Security Settings].

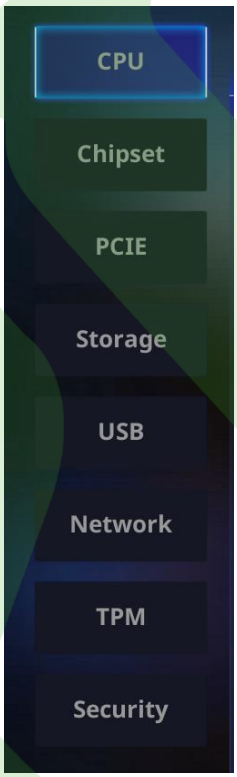

When the BIOS cursor is on the [Advanced] icon in the main menu, use the keyboard → key to enter the submenus of the [Advanced] menu, use the ↑ ↓ keys to select a submenu, and after selecting a submenu, use the → key again to enter the corresponding function options area.

3.1 CPU Settings



[PSS Support]: Select to enable or disable the PSS platform priority scheduler; PSS is a technology in AMD processors used to manage processor performance states to optimize power consumption and performance.

[PPC Limit]: Sets the PState mode. This item appears when PSS Support is set to Enabled, and is used to adjust the balance between processor power consumption and performance.

[NX Mode]: Select to enable or disable NX mode (memory antivirus protection). This option sets hardware-based blocking of code execution in data areas to improve system security. Overclockers can disable it to eliminate memory permission interference and ensure stability tests pass.

[Global C-State Control]: Select to enable or disable global C-state control. This option sets whether the CPU enters low-power mode when idle.

[IOMMU]: Select to enable or disable IOMMU (I/O Memory Management Unit) for I/O virtualization.

[SMT Control]: Select to enable or disable CPU symmetric multithreading.

[Core Performance Boost]: Select to enable or disable the processor boost function.

[AVX512]: Select to enable or disable the processor AVX512 instruction set extension.

[SMEE]: Select to enable or disable the SMEE function.

3.1 CPU Settings



On the right side of the [CPU Settings] interface is the CPU detail information display box, where users can view detailed CPU information.

3.2 Chipset Settings



Onboard Devices

[Primary Video Device]: Select the primary display output device. Default is Auto; a discrete graphics card is preferred if installed. You can select integrated graphics [IGFX] as the primary output device, discrete graphics [PCIE] as the primary output device, or hybrid output of discrete + integrated graphics [PEG].

[Internal Graphics]: Enable/disable the integrated graphics. Default is Auto. Do not disable it if no discrete graphics card is installed or if [Primary Display Device] is set to integrated graphics [IGFX], otherwise there will be no display output at boot.

[UMA Framebuffer Size]: Manually set the integrated graphics memory size, or allow the system to dynamically allocate system memory for the integrated graphics.

[Serial Port]: Enable/disable the Serial port (COM).

[Change Settings]: Select the resources configured for the Serial port.

[App Compatibility Database]： Enable/disable App Compatibility Database.

3.3 PCIE Settings



[Native ASPM]: Select the ASPM power control mode. Enabled: controlled by the OS; Disabled: controlled by BIOS.

[CPU PCIE ASPM Mode Control]: Sets the hardware-level dynamic power-saving technology jointly implemented by the CPU and PCIe devices.

[PCIe X16 ASPM]: Sets the ASPM power-saving mode state of PCI Express devices.

[CPU PCIe Lanes Configuration]: Configures the PCIe lane allocation from the CPU to meet the requirements of multiple PCIe devices.

[PCIe X16 Link Mode]: Sets the PCIe protocol speed of the PCI Express X16 slot to better support different PCIE devices.

[M2_SSD Link Mode]: Sets the PCIe protocol speed of the M.2 SSD connector.

[Chipset Link Mode]: Sets the DMI protocol speed for communication between the chipset and the CPU.

[Above 4G Decoding]: Enable or disable 64-bit decoding devices that use memory address space above 4G. This option is only available when [ReSize BAR Support] is enabled.

[ReSize BAR Support]: Enable or disable Resize BAR (Base Address Register) support.

[SR-IOV Support]: Enable or disable SR-IOV (Single Root I/O Virtualization).

3.4 Storage Settings

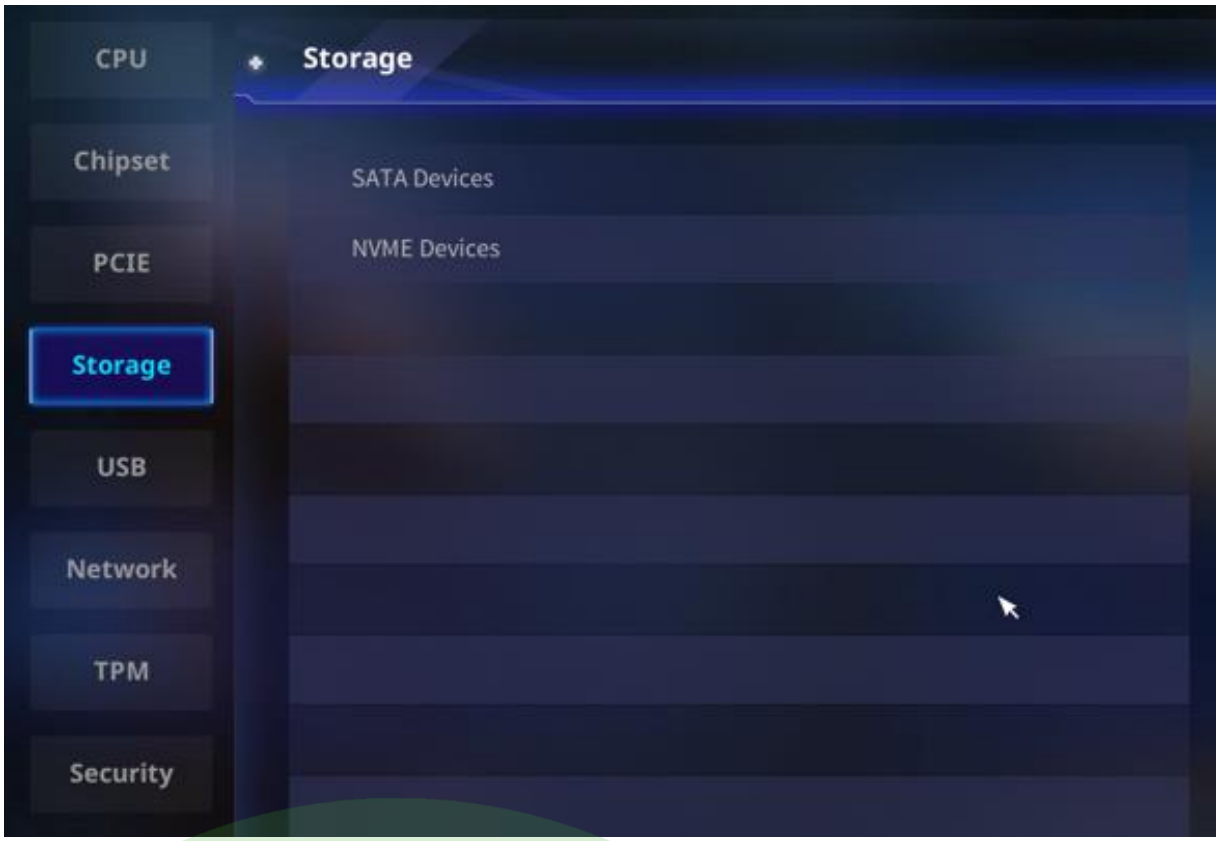

[SATA Device]: SATA device control.

[NVME Device]: NVME device control.

3.5 USB Settings



[Rear/Front USB Ports]: Enable/disable the corresponding USB ports.

3.6 Network Stack



[LAN Control]: Enable/disable the onboard LAN.

[MAC Address]: Displays the LAN MAC address of this device.

[Driver Version]: Displays the LAN driver version of this device.

[UEFI Diskless Boot]: Enable/disable UEFI diskless boot.

[--IPv4 PXE Support]: Enable/disable IPv4 PXE boot support.

[--IPv4 HTTP Support]: Enable/disable IPv4 HTTP boot support.

[--IPv6 PXE Support]: Enable/disable IPv6 PXE boot support.

[--IPv6 HTTP Support]: Enable/disable IPv6 HTTP boot support.

[--PXE Boot Wait Time]: The waiting time (in seconds) to press ESC to abort PXE boot. Use +/- or number keys to set the value; default is Auto.

[--Media Detect Count]: The number of times to detect network media devices. Use +/- or number keys to set the value; default is Auto.

3.7 TPM Settings

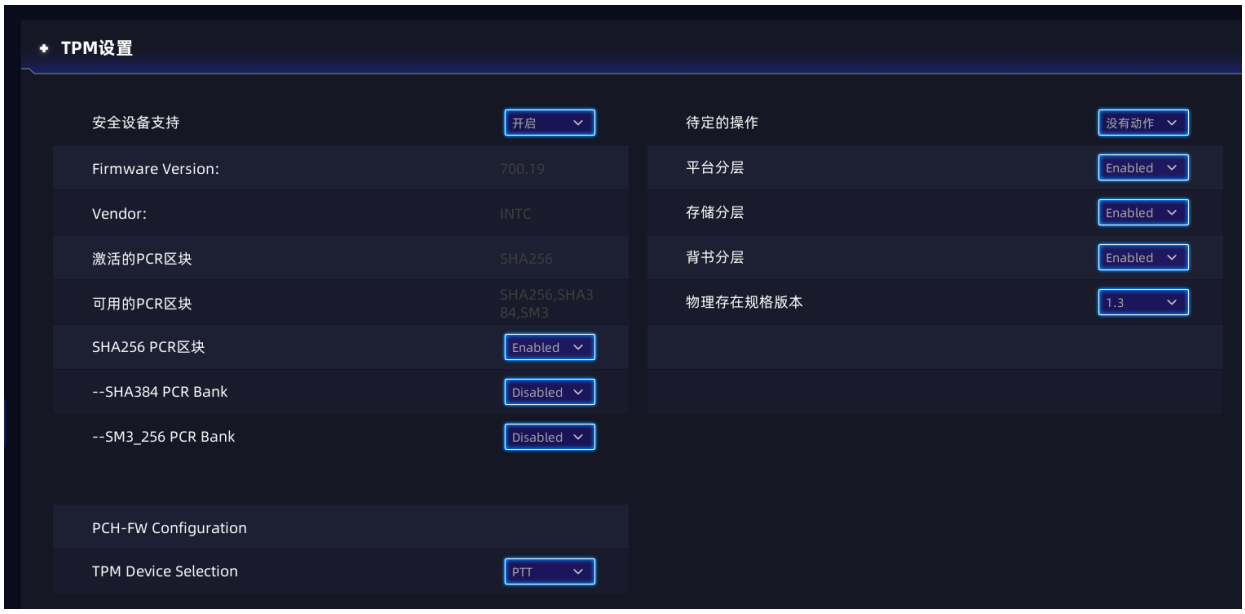

[Security Device Support]: Enable/disable BIOS support for security devices. Security devices will not be shown in the OS; the TCG EFI protocol and INT1A interface are unavailable.

3.8 Security Settings



[Administrator Password]: Sets the administrator password.

[User Password]: Sets the user password.

4. OverClock



The OverClock interface is divided into 3 modules: [CPU], [Memory], and [Platform]. Each module contains corresponding overclocking options, and there is an advanced options jump button in the upper right corner of each module.

Note: All option settings in this interface may cause system crashes, hardware damage, etc. Please operate with caution.

4.1 CPU



[Precision Boost Overdrive]: Enable/disable/select PBO mode. In addition to enabling or disabling PBO mode, more PBO methods can be selected.

[Thermal Limit]: Manually select the CPU thermal limit. This option is only available when [Precision Boost Overdrive] is set to [Enhancement].

[AMD Eco Mode]: Manually select to unlock the CPU power limit. This option is only available when [Precision Boost Overdrive] is set to [AMD Eco Mode].

[PPT Limit]: Sets the CPU PPT (Package Power Tracking) power limit.

[TDC Limit]: Sets the CPU TDC (Thermal Design Current) sustained current limit.

[EDC Limit]: Sets the CPU EDC (Electrical Design Current) peak current limit.

[Precision Boost Overdrive Scalar]: Select Auto/Manual to set the PBO scalar level.

[Customized PBO Scalar]: Manually set the PBO scalar level. Adjustment range is 1x-10x; the larger the value, the more aggressive the system's control over voltage, frequency, and temperature.

[Max CPU Boost Clock Override(+)]: Manually set the CPU frequency boost under system load; adjustable range is 25~200. Every 100 units set corresponds to a 0.1GHz increase in frequency.

[Curve Optimizer]: Sets the CPU undervolt/overvolt range when PBO mode is enabled; options are All Cores/Per Core/Per CCD for individual undervolt/overvolt adjustment.

[CPU Core Ratio]: Manually set the CPU core frequency multiplier; adjustable range is 14x - 60x. Careless setting of this option may cause system crashes or hardware damage; please operate with caution.

[CPU Core Voltage]: Manually set the CPU core voltage; adjustable range is 0.8V - 1.55V. Careless setting of this option may cause system crashes or hardware damage; please operate with caution.

4.2 Memory



[Memory Preset]: Select a memory preset profile. After selection, memory frequency, timings, and voltage values are overwritten by the preset profile. Actual values depend on the memory preset file; please select with caution.

[Memory Frequency]: Sets the maximum memory frequency. Careless setting of this option may cause failure to boot or system crashes; please operate with caution.

[Memory Timings]: Enter the memory timings page to set memory timing values. Careless setting may cause failure to boot or system crashes; please operate with caution.

[FCLK Frequency]: Sets the maximum FCLK frequency. Careless setting of this option may cause failure to boot or system crashes; please operate with caution.

[UCLK:MCLK]: Sets the operating mode of the memory controller clock frequency (UCLK) and the memory clock frequency (MCLK). Careless setting of this option may cause failure to boot or system crashes; please operate with caution.

[VDDIO MEM Voltage]: Sets the memory VDDIO voltage; enter 0 for Auto.

[DRAM High Voltage Mode]: Enable/disable DRAM high voltage mode. When disabled, the memory voltage limit is 1.435V; when enabled, the memory voltage limit is raised to 2.070V. Default is Disabled; please operate with caution.

[Memory VDD Voltage]: Sets the memory VDD voltage; enter 0 for Auto.

[Memory VDDQ Voltage]: Sets the memory VDDQ voltage; enter 0 for Auto.

[Memory VPP Voltage]: Sets the memory VPP voltage; enter 0 for Auto.

[VDDP Voltage]: Sets the VDDP voltage; enter 0 for Auto.

4.3 Platform



[CPU SOC Voltage]: Sets the CPU SOC voltage; enter 0 for Auto.

[VDDG CCD Voltage]: Sets the VDDG CCD voltage; enter 0 for Auto.

[VDDG IOD Voltage]: Sets the VDDG IOD voltage; enter 0 for Auto.

[CCD Switch]: Sets the switch for the CCD cores inside the CPU; default is all enabled.

[Thermal Limit]: Manually set the CPU thermal limit, but it cannot be set above the CPU's maximum limit (95°C).

[Clock Spread Spectrum]: Enable or disable the clock spread spectrum function. When enabled, it reduces electromagnetic interference; when disabled, it slightly improves the CPU BCLK overclocking capability.

[Memory Latency Reduce]: Enable or disable the memory low-latency mode.

5. Status

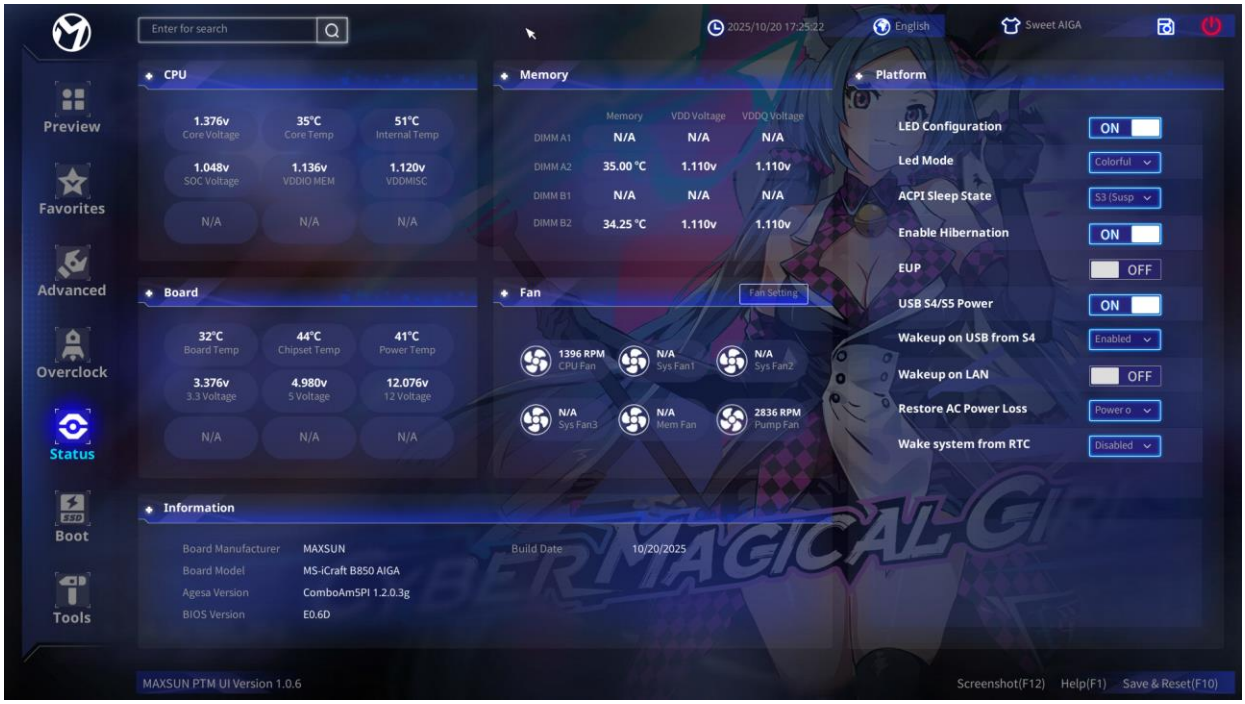

The Status interface is divided into 6 modules: [CPU Voltage/Temperature], [Memory Voltage/Temperature], [Motherboard Voltage/Temperature], [Fan Status], [Motherboard Information], and [Power Options].

The [CPU Voltage/Temperature] module displays the current CPU voltage and temperature information.

The [Memory Voltage/Temperature] module displays the current memory voltage and temperature information.

The [Motherboard Voltage/Temperature] module displays the current motherboard voltage and temperature information.

The [Fan Status] module displays in real time the speed of the fans currently installed on the motherboard. Click the [Fan Settings] button in the upper right corner to enter the [Fan Curve Adjustment] interface.

The [Motherboard Information] module displays basic information about the current motherboard, such as motherboard model and BIOS version.

The [Power Options] module contains power-related options.

6. Boot



[Full Screen Logo]: Enable/disable the full-screen boot logo.

[Boot Wait Time]: Sets the waiting time during which keyboard shortcuts can be used at boot; adjustable from 1 to 65535 seconds.

[Bootup NumLock State]: Select the NumLock activation state at boot.

[Fast Boot]: Enable/disable the Fast Boot function. When enabled, the device skips the boot wait time at startup, and input devices such as USB and PS/2 will not work during the boot phase; users will not be able to enter BIOS via keyboard. The OS, primary boot device, and primary display device must all support UEFI for this to take effect. It is not recommended to enable this unless necessary.

[CPU & Memory Change Reminder]: A reminder will appear when a CPU or memory change is detected.

[UEFI USB Device Priority]: Sets the first priority of UEFI USB devices.

[UEFI NVME Device Priority]: Sets the first priority of UEFI NVME devices.

[UEFI HDD Device Priority]: Sets the first priority of UEFI HDD devices.

7. Tools

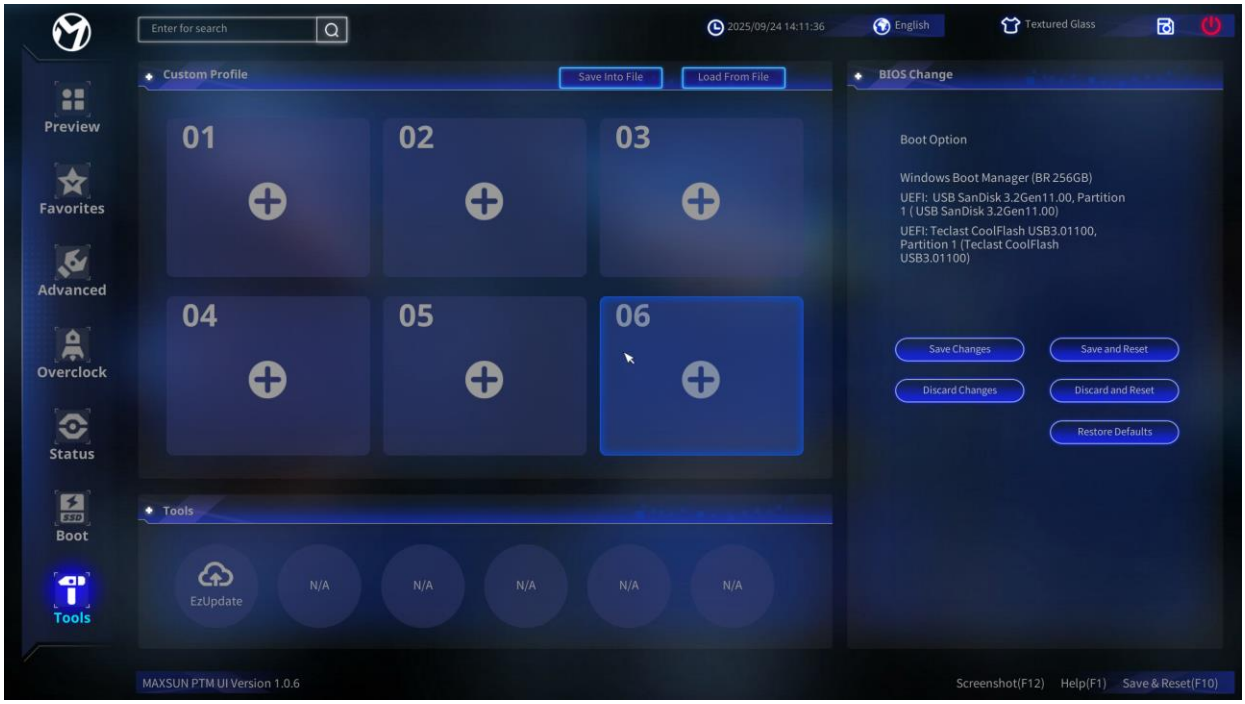

The Tools interface is divided into 3 modules: [User Profiles], [BIOS Changes], and [BIOS Update].

[User Profiles]: Users can save all current BIOS settings as a profile, save them to a file, or load settings from a previously saved file.

[BIOS Changes]: You can select [Save/Discard Changes], [Save Changes and Restart], [Discard Changes and Restart], and [Load Defaults]. You can also directly select a boot device to restart into it.

[BIOS Update]: Load the BIOS update file for this motherboard from a hard drive or USB storage device to update the BIOS.

