SIEMENS

BF722.1.1., BF922.1.1.

Microwave Oven



EN User manual and installation instructions

Register your appliance on My Siemens
and discover exclusive services and offers.

Siemens Home Appliances

Table of contents

INFORMATION FOR USE

1 Safety 2
2 Preventing material damage 5
3 Environmental protection and saving energy 5
4 Familiarising yourself with your appliance 6
5 Before using for the first time 7
6 Basic operation 8
7 Microwave 8
8 Meals 10
9 Time-setting options 11
10 Childproof lock 12
11 Basic settings 12
12 humidClean 14
13 Cleaning and servicing 14
14 Troubleshooting 15
15 Disposal 16
16 Customer Service 16
17 How it works 17

18 INSTALLATION INSTRUCTIONS 22
18.2 Safe installation 23

⚠ 1 Safety

Observe the following safety instructions.

1.1 General information

- Read this instruction manual carefully.
- Keep the instruction manual and the product information safe for future reference or for the next owner.
- Do not connect the appliance if it has been damaged in transit.

1.2 Intended use

This appliance is designed only to be built into kitchen units. Read the special installation instructions.
Only a licensed professional may connect appliances without plugs. Damage caused by incorrect connection is not covered under the warranty.
The appliance can only be used safely if it is correctly installed according to the safety instructions. The installer is responsible for ensuring that the appliance works perfectly at its installation location.

Only use this appliance:
- To prepare meals and drinks.
- Under supervision. Never leave the appliance unattended when cooking for short periods.
- For household use and similar applications, such as: In kitchens for employees in shops, offices and other commercial sectors; in agriculture; by customers in hotels and other residential facilities; in bed and breakfasts.
- Up to an altitude of 4000 m above sea level.

This appliance complies with the standards EN 55011 and CISPR 11. It is a group 2, class B product. Group 2 means that microwaves are produced for the purpose of heating food. Class B means that the appliance is suitable for private households.

1.3 Restriction on user group

This appliance may be used by children aged 8 or over and by people who have reduced physical, sensory or mental abilities or inadequate experience and/or knowledge, provided that they are supervised or have been instructed on how to use the appliance safely and have understood the resulting dangers.
Do not let children play with the appliance. Children must not perform cleaning or user maintenance unless they are at least 15 years old and are being supervised.
Keep children under the age of 8 years away from the appliance and power cable.

1.4 Safe use

Always place accessories in the cooking compartment the right way round.

⚠ WARNING – Risk of fire!
Combustible objects that are left in the cooking compartment may catch fire.
▸ Never store combustible objects in the cooking compartment.

- If smoke is emitted, the appliance must be switched off or the plug must be pulled out and the door must be held closed in order to stifle any flames.

Loose food remnants, fat and meat juices may catch fire.

- Before using the appliance, remove the worst of the food residues and remnants from the cooking compartment, heating elements and accessories.

⚠ WARNING – Risk of burns!

Accessories and cookware get very hot.

- Always use oven gloves to remove accessories or cookware from the cooking compartment.

When the cooking compartment is hot, any alcoholic vapours inside may catch fire. The appliance door may spring open. Hot steam and jets of flame may escape.

- Only use small quantities of drinks with a high alcohol content in food.
- Do not heat spirits (≥ 15% vol.) when undiluted (e.g. for marinating or pouring over food).
- Open the appliance door carefully.

⚠ WARNING – Risk of scalding!

The accessible parts of the appliance become hot during operation.

- Never touch these hot parts.
- Keep children at a safe distance.

Hot steam may escape when you open the appliance door. Steam may not be visible, depending on the temperature.

- Open the appliance door carefully.
- Keep children at a safe distance.

If there is water in the cooking compartment when it is hot, this may create hot steam.

- Never pour water into the cooking compartment when the cooking compartment is hot.

⚠ WARNING – Risk of injury!

Scratched glass in the appliance door may develop into a crack.

- Do not use any harsh or abrasive cleaners or sharp metal scrapers to clean the glass on the appliance door, as they may scratch the surface.

The hinges on the appliance door move when the door is opened and closed, which could trap your fingers.

- Keep your hands away from the hinges.

⚠ WARNING – Risk of electric shock!

Improper repairs are dangerous.

- Repairs to the appliance should only be carried out by trained specialist staff.
- Only use genuine spare parts when repairing the appliance.
- If the power cord or the appliance power cable of this appliance is damaged, it must be replaced with a special power cord or special appliance power cable, which is available from the manufacturer or its Customer Service.
- If the power cord of this appliance is damaged, it must be replaced by trained specialist staff.

If the insulation of the power cord is damaged, this is dangerous.

- Never let the power cord come into contact with hot appliance parts or heat sources.
- Never let the power cord come into contact with sharp points or edges.
- Never kink, crush or modify the power cord.

An ingress of moisture can cause an electric shock.

- Do not use steam- or high-pressure cleaners to clean the appliance.

If the appliance or the power cord is damaged, this is dangerous.

- Never operate a damaged appliance.
- Never operate an appliance with a cracked or fractured surface.
- Never pull on the power cord to unplug the appliance. Always unplug the appliance at the mains.
- If the appliance or the power cord is damaged, immediately unplug the power cord or switch off the fuse in the fuse box.
- Call customer service. →*Page 16*

⚠ WARNING – Risk of suffocation!

Children may put packaging material over their heads or wrap themselves up in it and suffocate.

- Keep packaging material away from children.
- Do not let children play with packaging material.

Children may breathe in or swallow small parts, causing them to suffocate.

- Keep small parts away from children.
- Do not let children play with small parts.

1.5 Microwave

CAREFULLY READ THE IMPORTANT SAFETY INSTRUCTIONS AND KEEP THEM SAFE FOR FUTURE USE

⚠ WARNING – Risk of fire!

Using the appliance for anything other than its intended purpose is dangerous and may cause damage. For example, heated slippers and pillows filled with grain or cereal may catch fire, even several hours later.

- ▸ Never dry food or clothing with the appliance.
- ▸ Never heat up slippers, pillows filled with grain or cereal, sponges, damp cleaning cloths or similar with the appliance.
- ▸ The appliance must only be used to prepare food and drink.

Food and its packaging and containers may catch fire.

- ▸ Never heat food in heat-retaining packaging.
- ▸ Do not leave food unattended while it is heating in containers made of plastic, paper or other combustible materials.
- ▸ Never set the microwave power too high or the cooking time too long. Follow the instructions provided in this user manual.
- ▸ Never use the microwave to dry food.
- ▸ Never defrost or heat food with a low water content, such as bread, at too high a microwave power or for too long.

Cooking oil may catch fire.

- ▸ Never use the microwave to heat cooking oil on its own.

⚠ WARNING – Risk of explosion!

Liquids and other food may easily explode when in containers that have been tightly sealed.

- ▸ Never heat liquids or other food in containers that have been tightly sealed.

⚠ WARNING – Risk of burns!

Foods with peel or skin may burst or explode during heating, or even afterwards.

- ▸ Never cook eggs in their shell or heat hard-boiled eggs in their shell.
- ▸ Never cook shellfish or crustaceans.
- ▸ Always prick the yolk of eggs before microwaving.
- ▸ The skin of foods that have a peel or skin, such as apples, tomatoes, potatoes and sausages, may burst. Before heating, prick the peel or skin.

Heat is not distributed evenly through baby food.

- ▸ Never heat baby food in closed containers.
- ▸ Always remove the lid or teat.
- ▸ Stir or shake well after heating.
- ▸ Check the temperature before giving the food or drink to a child.

Heated food gives off heat. The cookware may become hot.

- ▸ Always use oven gloves to remove cookware or accessories from the cooking compartment.

Airtight packaging may burst when food is heated.

- ▸ Always follow the instructions on the packaging.
- ▸ Always use oven gloves to remove the dishes from the cooking compartment.

The accessible parts of the appliance become hot during operation.

- ▸ Never touch these hot parts.
- ▸ Keep children at a safe distance.

⚠ WARNING – Risk of scalding!

There is a possibility of delayed boiling when a liquid is heated. This means that the liquid reaches the boiling temperature without the usual steam bubbles rising to the surface. Exercise caution even when only gently shaking the container. The hot liquid may suddenly boil over and splatter.

- ▸ Always place a spoon in the container when heating liquids. This prevents delayed boiling.

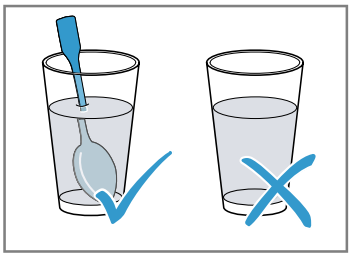

⚠ WARNING – Risk of injury!

Unsuitable cookware may crack. Porcelain or ceramic cookware can have small perforations in the handles and lid. These perforations conceal a cavity below. If moisture penetrates this cavity, it could cause the cookware to crack.

- ▸ Only use microwave-safe cookware.

Cookware and containers made from metal or cookware with metal edging may lead to sparks being formed during simple microwave operation. The appliance is damaged.

- ▸ Never use metal containers during microwave-only operation.

- Only use microwave-safe cookware.

⚠ WARNING – Risk of electric shock!
The appliance uses a high voltage.
- Never remove the casing.

⚠ WARNING – Risk of serious harm to health!
Inadequate cleaning may destroy the surface of the appliance, reduce its service life, and lead to dangerous situations, such as escaping microwave energy.
- Clean the appliance on a regular basis, and remove any food residue immediately.
- Always keep the cooking compartment, door seal, door and hinge clean.
  → *"Cleaning and servicing", Page 14*

Never operate the appliance if the cooking compartment door or the door seal is damaged. Microwave energy may escape.
- Never use the appliance if the cooking compartment door, the door seal or the plastic door frame is damaged.
- Any repair work must only be carried out by customer service.

Microwave energy will escape from appliances that do not have any casing.
- Never remove the casing.
- For any maintenance or repair work, contact the customer service.

2 Preventing material damage

2.1 General

ATTENTION
Alcoholic vapours may catch fire in the hot cooking compartment and cause permanent damage to the appliance. The appliance door may spring open due to an explosion and it may fall off. The door panels may shatter and fragment. Due to the resulting negative pressure, the cooking compartment may become considerably deformed inwards.
- Do not heat spirits (≥ 15% vol.) when undiluted (e.g. for marinating or pouring over food).

The prolonged presence of moisture in the cooking compartment leads to corrosion.
- Always wipe away the condensation after cooking.
- Do not keep moist food in the cooking compartment for a long time with the door closed.
- Do not store food in the cooking compartment.

If the seal is very dirty, the appliance door will no longer close properly during operation. This may damage the front of adjacent kitchen units.
- Keep the seal clean at all times.
- Never operate the appliance if the seal is damaged or missing.

Sitting or placing objects on the appliance door may damage it.
- Do not place, hang or support objects on the appliance door.

2.2 Microwave

Follow these instructions when using the microwave.

ATTENTION
Metal touching the wall of the cooking compartment will cause sparks, which may damage the appliance or the inner door pane.
- Metal (e.g. a spoon in a glass) must be kept at least 2 cm from the cooking compartment walls and the inside of the door.

Placing aluminium containers in the appliance may cause sparks, which will damage the appliance.
- Do not use aluminium containers in the appliance.

Operating the appliance without food in the cooking compartment may lead to overloading.
- Do not switch on the microwave unless there is food inside. The only exception to this rule is when performing a short cookware test.

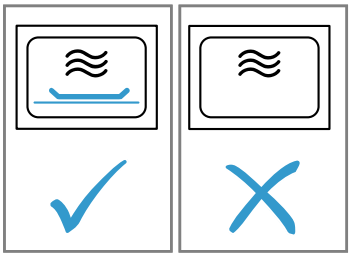

If you prepare several bags of microwave popcorn in immediate succession at a microwave power level that is too high, the cooking compartment may be damaged.
- Leave the appliance to cool down for several minutes between each use.
- Never set a microwave power level that is too high.
- Use a maximum microwave output of 600 watts.
- Always place the popcorn bag on a glass plate.

3 Environmental protection and saving energy

3.1 Disposing of packaging

The packaging materials are environmentally compatible and can be recycled.
- Sort the individual components by type and dispose of them separately.

3.2 Saving energy

If you follow these instructions, your appliance will use less power.

Heat two cups of liquid at the same time.
✔ Heating several dishes at the same time requires less energy than heating dishes one after the other.

Switch off the display in the basic settings.
✔ The appliance saves energy in low power mode.

Notes
- In low power mode, the display automatically reduces the brightness to setting 1.
- In accordance with the EU Ecodesign Directive 2023/826, this appliance is in a different state when switched off. This is referred to below as low power mode.
- Even when the main function is not active, the appliance needs energy for:
  – Detecting operation of the touch keys
  – Monitoring door opening
  – Editing the time (without display)

  By definition, therefore, there is neither an “off” nor a “standby” mode, which is why the term low power mode is used. EN IEC 60350-1:2023 must be used to measure low power mode.

4 Familiarising yourself with your appliance

4.1 Control panel

You can use the control panel to configure all functions of your appliance and to obtain information about the operating status.
On certain models, specific details such as colour and shape may differ from those pictured.

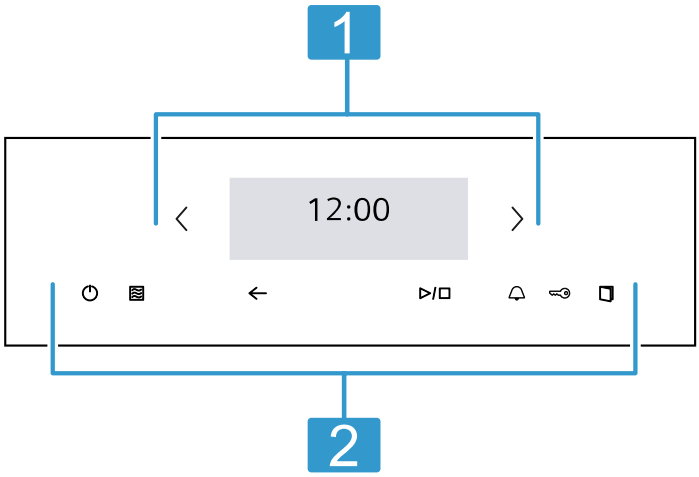

1	**Touch display** The touch display functions both as a display and a control element. → *"Touch display", Page 6*
2	**Touch fields** You can use the touch fields to set various functions directly. → *"Touch fields", Page 6*

4.2 Touch fields

Touch fields are touch-sensitive surfaces. To select a function, touch the relevant field.

Touch field	Function
⏻	Switch the appliance on or off. → *"Basic operation", Page 8*
≋	Direct access to the microwave → *"Microwave", Page 8*
←	Go back one setting.
▷/□	Start or pause operation. → *"Basic operation", Page 8*
🔔	Select the timer. → *"Setting the timer", Page 12*
🔒	Activate or deactivate the child lock.
⎘	Open the appliance door
〈	Navigate to the left on the touch display.
〉	Navigate to the right on the touch display.

4.3 Touch display

The touch display shows the options you can choose from and the settings configured for the current function. To select one of the points, touch the relevant text field.

Settings area

The settings area is shown in tiles.
The individual tiles show you the current selection options and settings that have already been implemented. To select a function, press the corresponding tile.
Information is also shown in tiles.
To scroll to the left or right if there are several tiles, use the navigation buttons 〈 and 〉.

Possible symbols in tiles

Symbol	Meaning
∧ ∨	Scroll if there is a lot of content in the tile.
− +	Decrease or increase the adjustment value.
↺	Reset the adjustment value.
✕	Close the tile.

4.4 Automatic door opener

If you press the automatic door-opener, the appliance door springs open. You can fully open the appliance door manually.

Notes
- In the event of a power failure, the automatic door-opening does not work. You can open the door manually.
- If you open the appliance door during operation, this pauses the operation.
- When you close the appliance door, the operation does not continue automatically. Start the operation.
- If the appliance is switched off for an extended period of time, the appliance door opens with a time delay when the door open button is pressed.

4.5 Types of heating and functions

To ensure that you always use the right type of heating to cook your food, we have explained the differences and applications below.

Name	Power/settings	Use
Microwave	90/180/360/600/"boost"	For defrosting, cooking and heating foods and liquids. → *"Microwave", Page 8*
Meals		There are preprogrammed settings for many dishes.
Cleaning		Select the cleaning function for the cooking compartment. → *"humidClean", Page 14*
Basic settings		Adjust the basic settings. → *"Basic settings", Page 12*

4.6 Cooking compartment

The functions in the cooking compartment make your appliance easier to use.

Interior lighting

When you open the appliance door, the interior lighting switches on. If the appliance door remains open for longer than approx. 15 minutes, the interior lighting switches off.
With most types of heating and functions, the interior lighting remains on while the appliance is in operation. The interior lighting switches off again when the operation stops.

Cooling fan

The cooling fan switches on and off as required. The hot air escapes through the ventilation slots above the appliance door.

ATTENTION
Covering the ventilation slots will cause the appliance to overheat.
- ▸ Do not cover the ventilation slots.

To cool the cooking compartment more quickly after operation, the cooling fan continues to run for a certain period afterwards. If the appliance is running in microwave operation, the appliance remains cool, but the cooling fan still switches on. The cooling fan may continue to run even when microwave operation has ended.

4.7 Condensation

Condensation can occur in the cooking compartment and on the appliance door when cooking. Condensation is normal and does not adversely affect appliance operation. Wipe away the condensation after cooking.

4.8 Appliance door

You can open the appliance door using ❒. If you open the appliance door during operation, the operation stops. If the appliance door is closed, you can continue operation with ▷/□.

5 Before using for the first time

Configure the settings for initial start-up. Clean the appliance and accessories.

5.1 Initial use

You need to make settings for initial use before you can use your appliance.

Setting the language

1. Press ⏻.
2. Select the required language.
3. Press →.

Setting the time

Requirement: The display shows 12:00. The hours flash.
1. Use + and − to set the hours.
2. Press the minutes.
3. Use + and − to set the minutes.
4. Press → .

Setting the date

Requirement: The display shows a date. The day flashes.
1. Use + and − to set the day.
2. Press the month.
3. Use + and − to set the month.
4. Press the year.

5. Use + and − to set the year.
6. Press "Finish".
✔ A notification appears on the display confirming that the initial start-up is complete.

5.2 Cleaning the appliance before using it for the first time

Clean the cooking compartment and accessories before using the appliance to prepare food for the first time.

1. Make sure that there is no leftover packaging, accessories or other objects in the cooking compartment.
2. Clean the smooth surfaces in the cooking compartment with a soft, damp cloth.

6 Basic operation

6.1 Switching on the appliance

▸ Press ⏻.
✔ The appliance is ready to use.

6.2 Switching off the appliance

▸ Press ⏻.
✔ The appliance stops any ongoing functions.
✔ The display shows the time for a few minutes.

6.3 Starting the appliance

▸ Press ▷/□.

6.4 Pausing the operation

1. Open the appliance door or press ▷/□.
✔ Operation is paused.
2. To continue operation, close the appliance door and press ▷/□.
✔ Operation continues.

6.5 Cancelling the operation

▸ Press ⏻.
✔ The appliance stops any ongoing functions.

7 Microwave

You can use the microwave to cook, heat up or defrost food very quickly.

7.1 Microwave output settings

This is where you can find an overview of the different microwave output settings and recommendations on when to use them.

Microwave output in watts	Maximum cooking time in hours	Use
90 W	1:30	Defrost delicate foods.
180 W	1:30	Defrost food and continue cooking.
360 W	1:30	Cook meat and fish or heat delicate foods.
600 W	1:30	Heat and cook food.
boost	00:30	Heat liquids.

Notes
- To protect the appliance, the maximum microwave output "boost" is gradually reduced to 600 watts during the first few minutes. Maximum output is made available again after a cooling period.
- The microwave output settings do not correspond with the real power consumption of the appliance.

7.2 Microwave-safe cookware

To heat food evenly and avoid damaging your appliance, it is important to use the right cookware and accessories.

Note: Read the manufacturer's instructions before using any cookware in the microwave. If in doubt, carry out a cookware test.

Microwave-safe

Cookware	Reason
Cookware made from heat-resistant, microwave-safe material: ▪ Glass ▪ Glass ceramic ▪ Porcelain ▪ Temperature-resistant plastic ▪ Fully glazed ceramic without cracks	These materials allow microwaves to pass through. Microwaves do not damage heat-resistant cookware.
Metal cutlery	**Note:** You can use metal cutlery, e.g. place a spoon in a glass, to prevent delayed boiling.

ATTENTION
Metal touching the wall of the cooking compartment will cause sparks, which may damage the appliance or the inner door pane.
▸ Metal (e.g. a spoon in a glass) must be kept at least 2 cm from the cooking compartment walls and the inside of the door.

Not microwave-safe

Cookware	Reason
Metal cookware	Metal does not allow microwaves to pass through. The food hardly heats up.
Cookware with gold or silver decoration	Microwaves can damage gold and silver decoration. **Tip:** You can only use this kind of cookware if the manufacturer guarantees that it is microwave-safe.

7.3 Testing cookware for microwave suitability

Test cookware to see whether it is suitable for microwave use. Testing cookware is the only time the appliance should be operated in microwave mode without any food inside.

⚠ **WARNING – Risk of scalding!**
The accessible parts of the appliance become hot during operation.
▸ Never touch these hot parts.
▸ Keep children at a safe distance.

1. Place the empty cookware in the cooking compartment.
2. Set the appliance to the maximum microwave power setting for 30 seconds to 1 minute.
3. Start the operation.
4. Check the cookware several times:
   – If the cookware is cold or warm to the touch, it is suitable for microwave use.
   – If the cookware becomes hot or sparks are created, stop the cookware test. The cookware is not microwave-safe.

7.4 QuickStart

1. Press ≋.
2. Use ▷/☐ to start the operation.

✔ The preset microwave output is started for 1 minute.

Note: You can change the presetting for the microwave output in the basic settings. →*Page 12*

7.5 Configuring the microwave settings

Note
Note the correct way to operate the microwave:
▪ Follow the safety instructions. →*Page 4*
▪ Observe the instructions on how to prevent material damage. →*Page 5*
▪ Observe the information on microwave-safe cookware and accessories.

1. Press ≋ or "Microwave".
2. Press "Microwave output".
3. Select the required microwave output.
4. Press "Apply".
5. Press "Cooking time".
6. Set the required cooking time.
   → *"Setting the cooking time", Page 11*
   You can reset the set cooking time using ↺.
7. Press "Apply".
8. If an end time is required, set the end time.
   ▸ Press "End".
   ▸ Set the required time.
   ▸ Press "Apply".
   The appliance automatically switches itself on, and then switches itself off at the preselected end time.
9. Use ▷/☐ to start the operation.

✔ An audible signal sounds once the cooking time has elapsed.

Tip: To ensure optimum use of your appliance, refer to the information in the recommended settings.
→ *"How it works", Page 17*

7.6 Changing the microwave output setting

You can change the microwave output setting during operation.

1. Press the set microwave output setting.
2. Select the required microwave output.
   If the set cooking time exceeds the maximum cooking time for the microwave output, the appliance automatically reduces the cooking time.
3. Press "Apply".

7.7 Changing the cooking time

1. Press the set cooking time.
2. Set the required duration.
3. Press "Apply".

7.8 Extending the cooking time

Once the cooking time has elapsed, you can continue cooking the food.

1. Press "Add extra cooking time".
2. Set the required cooking time.
   → *"Setting the cooking time", Page 11*
   You can reset the set cooking time using ↺.

3. Press "Apply".
4. Use ▷/☐ to start the operation.

7.9 Pausing the operation

1. Open the appliance door or press ▷/☐.
✔ Operation is paused.
2. To continue operation, close the appliance door and press ▷/☐.
✔ Operation continues.

7.10 Cancelling the operation

▸ Press ⏻.
✔ The appliance stops any ongoing functions.

8 Meals

The "Meals" operating mode helps you to use your appliance to prepare different meals by selecting the optimum settings automatically.

8.1 Automatic switch-off

Thanks to the automatic switch-off function, you can cook with complete peace of mind.
To achieve optimal results, remove the dish once the programme ends.

8.2 Tips on configuring the settings for dishes

Follow these tips to achieve optimal cooking results:

- Only use food that is in perfect condition.
- Take the food out of its packaging and weigh it. If you cannot set the exact weight on the appliance, round the weight up or down.
- Only use microwave-safe, heat-resistant cookware, e.g. made of glass or ceramic.
- Place the food in the cold cooking compartment.

Defrosting

- Freeze and store food flat and in portion-sized quantities at -18 °C.
- Place the frozen food on flat cookware, such as a glass or porcelain plate.
- Food may not be completely defrosted by the end of the programme. The food can nonetheless be further processed.
- To allow the temperature to equalise, leave the defrosted food to rest for another 10 to 30 minutes in the appliance after switching it off.
- Liquid is produced when defrosting meat or poultry. When turning, drain off any liquid. Do not reuse the liquid for other purposes or allow it to come into contact with other foods.
- After turning, remove any minced meat that has already defrosted.
- Whole poultry should be placed on the cookware breast-side down and poultry portions skin-side down.

Vegetables

- Fresh vegetables: Cut into pieces of equal size. Add one tablespoon of water per 100 g.
- Frozen vegetables: Only suitable for blanched, not pre-cooked vegetables. It is not suitable for frozen vegetables in cream sauce. Add 1 to 3 tablespoons of water. Do not add any water for spinach or red cabbage.

Potatoes

- Boiled potatoes: Cut into pieces of an equal size. Add two tablespoons of water and some salt per 100 g.
- Unpeeled boiled potatoes: Use potatoes of the same thickness. Wash them and prick the skin. Place the wet potatoes in a dish. Do not add water.

Rice

- Do not use brown rice or boil-in-the-bag rice.
- Add two to two-and-a-half times the amount of water to the rice.

8.3 Setting a programme

Requirement: The appliance is switched on.

1. Press "Meals".
2. Select a programme.
3. Press "Weight".
4. Use + and − to set the weight
5. Press "Apply".
6. If an end time is required, set the end time.
   ▸ Press "End".
   ▸ Set the required time.
   ▸ Press "Apply".
   The appliance automatically switches itself on, and then switches itself off at the preselected end time.
7. Place the food in the cooking compartment.
8. Close the appliance door.
9. Press ▷/☐.

✔ An audible signal sounds once the cooking time has elapsed.

Note: For some programmes, the display provides instructions during preparation. Follow the information provided.

Extending the cooking time

Once the cooking time has elapsed, you can continue cooking the food.

1. Press "Add extra cooking time".
2. Set the required cooking time.
   → *"Setting the cooking time", Page 11*
   You can reset the set cooking time using ↺.
3. Press "Apply".
4. Use ▷/☐ to start the operation.

Pausing the operation

1. Open the appliance door or press ▷/☐.

✔ Operation is paused.

2. To continue operation, close the appliance door and press ▷/☐.

✔ Operation continues.

Cancelling the operation

- ▸ Press ⏻.
- ✔ The appliance stops any ongoing functions.

8.4 Overview of dishes

Dish	Suitable food	Weight range in kg	Cookware/accessories
Defrost bread [1]	Bread, whole, round or long; sliced bread; sponge cake, yeast cake, fruit flan, cakes without icing, cream or gelatine	0.20-1	Shallow cookware without lid
Defrost meat [1]	Joints, flat pieces of meat, chicken, minced meat	0.20-2	Shallow cookware without lid
Defrost fish [1]	Whole fish, fish fillet, fish steak	0.10-1	Shallow cookware without lid
Fresh vegetables [2]	e.g. cauliflower, broccoli, carrots, kohlrabi, leeks, peppers, courgettes	0.15-1	Covered cookware
Frozen vegetables [2]	e.g. cauliflower, broccoli, carrots, kohlrabi, red cabbage, spinach	0.15-1	Covered cookware
Rice [2]	Long-grain rice	0.05-0.3	Deep cookware with lid
Boiled potatoes [2]	Potatoes with or without skin, potatoes cut into pieces of equal size	0.20-1	Covered cookware

9 Time-setting options

Your appliance offers time-setting options that you can use to set the cooking time, the end time and the timer.

Time-setting options	Use
Cooking time ⊢	If you set a cooking time, the appliance stops heating automatically once this time has elapsed.
End ⊣	For the cooking time, you can set the time at which you want the operation to end. The appliance starts up automatically so that the operation finishes at the required time.
Timer 🔔	You can set the timer to run independently of the operation. It does not affect the appliance.

9.1 Setting the cooking time

You can use "boost" to set the cooking time for the operation up to 30 minutes. You can set a cooking time for all other settings of up to 90 minutes.

Requirement: An operation mode and level have been set.

1. Press "Cooking time".
2. Use + and − to set the seconds or select a predefined value on the display.
3. To set the minutes, press the minutes.
4. Use + and − to set the minutes or select a predefined value on the display.
5. Use ▷/□ to start the operation.

Extending the cooking time

Once the cooking time has elapsed, you can continue cooking the food.

1. Press "Add extra cooking time".
2. Set the required cooking time.
   → *"Setting the cooking time", Page 11*
   You can reset the set cooking time using ↺.
3. Press "Apply".
4. Use ▷/□ to start the operation.

Changing the cooking time

You can change the cooking time at any time.

1. Press the cooking time.
2. Set the seconds with + and − or select a predefined value on the display.
3. To set the minutes, press the minutes.
4. Use + and − to set the minutes or select a predefined value on the display.
5. Press "Apply".

Cancelling the cooking time

You can cancel the cooking time at any time.

1. Press the cooking time.
2. Reset the cooking time using ↺.
   For operating modes that always require a cooking time, the appliance resets the cooking time to the preset value.
3. Press "Apply".

[1] Observe the signals given when it is time to turn the food.
[2] Observe the signals given when it is time to stir the food.

9.2 Setting the end time

You can delay the time at which the cooking time for the operation is due to end by up to 24 hours.

Notes

- To achieve good cooking results, do not delay the time once the operation has already started.
- Food will spoil if you leave it in the cooking compartment for too long.

Requirements

- An operating mode and level have been set.
- A cooking time has been set.

1. Press "End".
2. Use + or − to delay the time.
   If required, use ↺ to reset the setting value.
3. Press ▷/□.

✔ The display shows the start time. The appliance is in standby mode.
✔ Once the start time has been reached, the appliance starts heating and the cooking time starts counting down.
✔ When the cooking time has elapsed, a signal sounds. A message appears on the display confirming that the operation has finished.

4. Once the cooking time has elapsed, perform one of the following actions:
   ▸ If required, you can select other settings and restart the operation.
   ▸ When the food is ready, use ⏻ to switch the appliance off.

Changing the end time

To achieve good cooking results, only change the set time before the operation starts and before the cooking time starts counting down.

1. Press the end time.
2. Use + or − to change the time.
3. Press "Apply".

Cancelling the end time

You can delete the set time at any time.

1. Press the end time.
2. Use ↺
3. Press "Apply".

9.3 Setting the timer

You can set the time on the timer. Once this time has elapsed, a signal tone sounds. You can set a maximum time on the timer of 24 hours. The function works independently of the operation and other time-setting options. The timer signal is different from other signals.

1. Press 🔔.

✔ The minutes flash.

2. Use + and − to set the minutes.
3. To set the hours, press the hours.
4. Use + and − to set the hours.
5. To set the seconds, press the seconds.
6. Use + and − to set the seconds.
7. Press "Start".

✔ The timer starts.
✔ On some displays, the timer continues to count down in the background. Press 🔔 to display the timer.

Ending the timer

Requirement: A signal sounds.

▸ Press any field.

✔ The timer is switched off.

Changing the timer

1. Press 🔔.
2. Press "Stop".

✔ The minutes flash.

3. Use + and − to set the minutes.
4. To set the hours, press the hours.
5. Use + and − to set the hours.
6. To set the seconds, press the seconds.
7. Use + and − to set the seconds.
8. Press "Start".

Cancelling the timer

1. If the timer is running in the background, use 🔔 to select the timer beforehand.
2. Press ↺.

10 Childproof lock

You can secure your appliance to prevent children from accidentally switching it on or changing the settings.

10.1 Activating the childproof lock

▸ Press and hold 🔒 for approx. 4 seconds.

✔ The control elements are locked.
✔ If a timer duration has been set, this continues to count down. While the child lock is active, the timer duration cannot be changed. To end signal tones, e.g. once the timer duration has elapsed, press any button.

10.2 Deactivating the childproof lock

1. Press and hold 🔒 for approx. 4 seconds.
2. The controls are unlocked.

11 Basic settings

You can configure the basic settings for your appliance to meet your needs.

11.1 Overview of the basic settings

Here you can find an overview of the basic settings and factory settings. The basic settings depend on the features of your appliance.

Notes
- Changes to the language, button tone and display brightness settings take effect immediately. All other settings do not take effect until you save them.
- Your changes to the basic settings will be retained for some time even after a power cut.

Basic settings	**Selection**
Language	See selection on appliance
Time	"Time" in 24-hour format
Date	"Date" in the format DD.MM.YYYY

Display	**Selection**
Brightness	▪ Settings 1 to 8 [1]
"Time", low power mode display	▪ On (this setting increases energy consumption) ▪ displayed, for set time [1] ▪ Off
"Time", display	▪ Digital + date [1] ▪ Digital ▪ Analog
Adjustment	▪ Align the display horizontally and vertically.

Sound	**Selection**
Button tone	▪ On [1] ▪ Off
Signal tone	▪ Very short ▪ Short duration ▪ Medium duration [1] ▪ Long duration

Appliance settings	**Selection**
Illumination	▪ On [1] ▪ Off
Microwave output selection	▪ 90 W ▪ 180 W ▪ 360W ▪ 600 W ▪ boost

Customisation	**Selection**
Brand logo	▪ Display [1] ▪ Don't display
Operation after switch-on	▪ Main menu [1] ▪ Microwave ▪ Meals
Childproof lock	▪ Available ▪ Deactivated

Factory settings	**Selection**
Factory settings	▪ Restore ▪ Cancel
Appliance information	▪ Displaying "Appliance information"

[1] Factory setting (may vary according to model)

11.2 Changing the basic settings

Requirement: The appliance is switched on.
1. Press "Basic settings".
2. Press the required basic setting.
3. Change the required settings on the display.
4. Use ← to return to the overview or go back to the main menu.

11.3 Changing the time

You can change the time in the basic settings.

Requirement: The appliance is switched on.
1. Press "Basic settings".
2. Press the "Time" basic setting.

✔ The display shows the set value. The hours flash.

3. Use + and − to set the hours.
4. Press the minutes.
5. Use + and − to set the minutes.
6. Press "Apply".
7. Use ← to return to the overview or go back to the main menu.

12 humidClean

The cleaning aid is a quick alternative for occasionally cleaning the cooking compartment. The cleaning aid softens dirt by evaporating the soapy water. It is then easier to remove the dirt.

ATTENTION
Incorrect cleaning may damage the appliance.
- Never pour liquid into the cooking compartment.

12.1 Setting the cleaning aid

Requirement: The appliance is switched on.
1. Press "humidClean".
2. Follow the instructions on the display.
3. Press "Apply".
4. Press ▷/□.
✔ A signal tone sounds once the time has elapsed.
5. Follow the instructions on the display.

13 Cleaning and servicing

To keep your appliance working efficiently for a long time, it is important to clean and maintain it carefully.

13.1 Cleaning products

Only use suitable cleaning agents.

⚠ **WARNING – Risk of electric shock!**
An ingress of moisture can cause an electric shock.
- Do not use steam- or high-pressure cleaners to clean the appliance.

ATTENTION
Unsuitable cleaning agents damage the surfaces of the appliance.
- Do not use harsh or abrasive cleaning products.
- Do not use cleaning products with a high alcohol content.
- Do not use hard scouring pads or cleaning sponges.
- Do not use any special cleaners for cleaning the appliance while it is hot.
- Only use glass cleaners, glass scrapers or stainless steel care products if recommended in the cleaning instructions for the relevant part.

Salt contained in new sponge cloths may damage surfaces.
- Wash new sponge cloths thoroughly before use.

You can find out which cleaning products are suitable for each surface or part of the appliance in the individual cleaning instructions.

13.2 Cleaning the appliance

Clean the appliance as specified. This will ensure that the different parts and surfaces of the appliance are not damaged by incorrect cleaning or unsuitable cleaning products.

⚠ **WARNING – Risk of fire!**
Loose food remnants, fat and meat juices may catch fire.
- Before using the appliance, remove the worst of the food residues and remnants from the cooking compartment, heating elements and accessories.

⚠ **WARNING – Risk of injury!**
Scratched glass in the appliance door may develop into a crack.
- Do not use any harsh or abrasive cleaners or sharp metal scrapers to clean the glass on the appliance door, as they may scratch the surface.

1. Read the information on cleaning products.
2. Observe the information on cleaning the appliance components or surfaces.
3. Unless otherwise specified:
   - Clean the components of the appliance with hot soapy water and a dish cloth.
   - Dry with a soft cloth.

13.3 Cleaning the cooking compartment

ATTENTION
Incorrect cleaning may damage the cooking compartment.
- Do not use oven spray, abrasive materials or other aggressive oven cleaners.

1. Read the information on cleaning products.
2. Clean with hot soapy water or a vinegar solution.
3. To remove very heavy soiling use oven cleaner suitable for stainless steel surfaces.
   Only use oven cleaner when the cooking compartment is cold.
   Tip: To eliminate unpleasant odours, heat up a cup of water with a few drops of lemon juice for 1 to 2 minutes at maximum microwave power setting. Always place a spoon in the container to prevent delayed boiling.
4. Wipe out the cooking compartment with a soft cloth.
5. Leave the cooking compartment to dry with the door open.

13.4 Cleaning the door panels

ATTENTION
Incorrect cleaning may damage the door panes.
- Do not use a glass scraper.

1. Read the information on cleaning products.
2. Clean the door panels with a soft dish cloth and glass cleaner.
   Note: Shadows on the door panels, which look like streaks, are caused by reflections made by the interior lighting.
3. Dry with a soft cloth.

13.5 Cleaning the door seal

ATTENTION
Incorrect cleaning may damage the door seal.
- Do not use metal scrapers or glass scrapers for cleaning.

- Do not use abrasive cleaning agents.

1. Read the information on cleaning products.
2. Clean the door seal with hot soapy water and a soft dish cloth.
3. Dry with a soft cloth.

13.6 Cleaning the front of the appliance

ATTENTION
Incorrect cleaning may damage the front of the appliance.
- Do not use glass cleaner, metal scrapers or glass scrapers for cleaning.
- To prevent corrosion on stainless steel fronts, remove any limescale, grease, starch and albumin (e.g. egg white) stains immediately.
- On stainless steel surfaces, use special stainless steel cleaning products suitable for hot surfaces.

1. Read the information on cleaning products.
2. Clean the front of the appliance using hot soapy water and a dish cloth.
   Note: Slight differences in colour on the front of the appliance are caused by the use of different materials, such as glass, plastic and metal.
3. For stainless steel appliance fronts, apply a thin layer of the stainless steel cleaning product with a soft cloth.
   You can obtain the stainless steel cleaning products from the after-sales service or the online shop.
4. Dry with a soft cloth.

13.7 Cleaning the control panel

ATTENTION
Incorrect cleaning may damage the control panel.
- Never wipe the control panel with a wet cloth.

1. Read the information on cleaning products.
2. Clean the control panel using a microfibre cloth or a soft, damp cloth.
3. Dry with a soft cloth.

14 Troubleshooting

You can rectify minor faults on your appliance yourself. Read the troubleshooting information before contacting after-sales service. This will avoid unnecessary costs.

⚠ **WARNING – Risk of injury!**
Improper repairs are dangerous.
- Repairs to the appliance should only be carried out by trained specialist staff.
- If the appliance is defective, call Customer Service.
  → *"Customer Service", Page 16*

⚠ **WARNING – Risk of electric shock!**
Improper repairs are dangerous.
- Repairs to the appliance should only be carried out by trained specialist staff.
- Only use genuine spare parts when repairing the appliance.
- If the power cord or the appliance power cable of this appliance is damaged, it must be replaced with a special power cord or special appliance power cable, which is available from the manufacturer or its Customer Service.
- If the power cord of this appliance is damaged, it must be replaced by trained specialist staff.

14.1 Malfunctions

Fault	Cause and troubleshooting
The appliance is not working.	The mains plug of the power cord is not plugged in. ▸ Connect the appliance to the power supply.
	The circuit breaker in the fuse box has tripped. ▸ Check the circuit breaker in the fuse box.
	There has been a power cut. ▸ Check whether the lighting in your room or other appliances are working.
	Malfunction 1. Switch off the fuse in the fuse box. 2. Switch the fuse back on after approx. 10 seconds. ✔ If the fault was a one-off, the message disappears. 3. If the message appears again, call the after-sales service. Please specify the exact error message when calling. → *"Customer Service", Page 16*
Microwave not working.	Door is not fully closed. ▸ Check whether food remains or foreign material are trapped in the door.

Fault	Cause and troubleshooting
Food does not heat up.	Demo mode is activated in the basic settings. **1.** Disconnect the appliance from power supply by briefly switching off the circuit breaker in the fuse box. **2.** Go to the basic settings and deactivate Demo mode within the next 5 minutes. →*Page 12*
The interior lighting is not working.	Different causes are possible. ▸ Call . → *"Customer Service", Page 16*
Microwave mode is cancelled.	Malfunction **1.** reset the appliance ▸ Press and hold ⏻ button for at least 10 seconds. ▸ Or switch off the fuse in the fuse box. Switch the fuse back on after approx. 10 seconds. ✔ If the fault was a one-off, the message disappears. **2.** If the message appears again, call the after-sales service. Please specify the exact error message when calling. → *"Customer Service", Page 16*
Food takes longer than usual to heat up.	The microwave power setting is set too low. ▸ Set a higher microwave power setting.
	A larger amount than usual has been placed in the appliance. ▸ Set a longer cooking time. You need double the time when you have double the amount.
	The food is colder than usual. ▸ Turn or stir the food from time to time during cooking.
Time not displayed when appliance switched off	Display switches itself off after a short time. No action required.

14.2 Information on display panel

Fault	Cause and troubleshooting
Message showing "D" or "E" appears in the display.	Malfunction **1.** reset the appliance ▸ Press and hold ⏻ button for at least 10 seconds. ▸ Or switch off the fuse in the fuse box. Switch the fuse back on after approx. 10 seconds. ✔ If the fault was a one-off, the message disappears. **2.** If the message appears again, call the after-sales service. Please specify the exact error message when calling. → *"Customer Service", Page 16*

15 Disposal

15.1 Disposing of old appliance

Valuable raw materials can be reused by recycling.

1. Unplug the appliance from the mains.
2. Cut through the power cord.
3. Dispose of the appliance in an environmentally friendly manner.
Information about current disposal methods are available from your specialist dealer or local authority.



This appliance is labelled in accordance with European Directive 2012/19/EU concerning used electrical and electronic appliances (waste electrical and electronic equipment - WEEE).
The guideline determines the framework for the return and recycling of used appliances as applicable throughout the EU.

16 Customer Service

Detailed information about the warranty period and the warranty conditions in your country is available via the

QR code on the enclosed document on service contacts and warranty conditions, from our customer service or on our website.
If you contact Customer Service, you will require the product number (E-Nr.) and the production number (FD) of your appliance.
You can find the contact details for our customer service via the QR code on the enclosed document on service contacts and warranty conditions or on our website.
This product contains light sources from energy efficiency class D. These light sources are available as a spare part and should only be replaced by trained specialist staff.
You can find the information required as per Regulation (EU) 2023/826 online at siemens-home.bsh-group.com on the product and service pages for your appliance, in the area of user manuals and additional documents.

16.1 Product number (E-Nr.) and production number (FD)

You can find the product number (E-Nr.) and the production number (FD) on the appliance's rating plate. You will see the rating plate with these numbers if you open the appliance door.

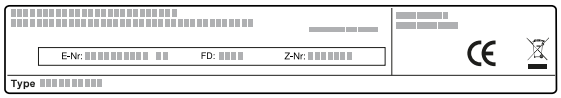

Make a note of your appliance's details and the Customer Service telephone number to find them again quickly.

17 How it works

Here, you can find the ideal settings for various dishes as well as the best accessories and cookware. We have tailored these recommendations to your appliance.

17.1 What is the best way to proceed?

Tip
Cooking tips
- The recommended settings always apply to the cooking compartment when it is cold and empty.
- The times specified in the overviews are intended as a guide only. They will depend on the quality and composition of the food.

⚠ **WARNING – Risk of burns!**
Foods with peel or skin may burst or explode during heating, or even afterwards.
- Never cook eggs in their shell or heat hard-boiled eggs in their shell.
- Never cook shellfish or crustaceans.
- Always prick the yolk of eggs before microwaving.
- The skin of foods that have a peel or skin, such as apples, tomatoes, potatoes and sausages, may burst. Before heating, prick the peel or skin.

1. Before using the appliance, remove all unnecessary cookware from the cooking compartment.
2. Select the desired food from the recommended settings.
3. Place the food in suitable cookware.
4. Place the cookware in the middle on the cooking compartment floor.
   The food can then absorb the microwaves from all sides.
5. Use the recommended settings when configuring the appliance settings.
   Set the shorter cooking time first. If necessary, increase the cooking time.
6. Use an oven cloth or oven gloves when taking hot cookware out of the cooking compartment.

17.2 Defrosting, heating and cooking with the microwave

Recommended settings for defrosting, heating and cooking with the microwave.
The cooking time depends on the cookware, as well as on the temperature, composition and quantity of the food. This is why temperature ranges are given in the tables. Begin with the lower temperature and, if necessary, use a higher setting the next time. If you use different quantities than those specified in the table, adhere to the rule of thumb: Double the amount = almost double the time, half the amount = half the time.

Defrosting with the microwave

Note
Cooking tips
- Freeze the food flat.
- Use microwave-safe cookware without a lid.
- Place the cookware on the bottom of the cooking compartment.
- Turn or stir the food 2 to 3 times during this time. When turning, remove any liquid that escapes during defrosting.
- Liquid is produced when defrosting meat or poultry. When turning, drain off any liquid. Do not use this for other purposes or allow it to come into contact with other foods.
- After turning, remove any minced meat that has already defrosted.
- Separate any defrosted parts when turning.
- To allow the temperature to equalise, leave the defrosted food to rest for another 10 to 30 minutes in the appliance after switching it off.

Food	Weight	Microwave output setting	Duration
Whole pieces of meat, on the bone or boned [1]	800 g	1. 180 W 2. 90 W	1. 8 mins 2. 10-15 mins
Whole pieces of meat, on the bone or boned [1]	1000 g	1. 180 W 2. 90 W	1. 10 mins 2. 15-20 mins
Whole pieces of meat, on the bone or boned [1]	1500 g	1. 180 W 2. 90 W	1. 15 mins 2. 20-25 mins
Meat in pieces or slices [1,2]	200 g	1. 180 W 2. 90 W	1. 3-5 mins 2. 3-5 mins
Meat in pieces or slices [1,2]	500 g	1. 180 W 2. 90 W	1. 5 mins 2. 5-10 mins
Meat in pieces or slices [1,2]	800 g	1. 180 W 2. 90 W	1. 5-10 mins 2. 5-10 mins
Minced meat, mixed [1,2]	200 g	90 W	8-10 mins
Minced meat, mixed [1,2]	500 g	1. 180 W 2. 90 W	1. 3 mins 2. 8-10 mins
Minced meat, mixed [1,2]	1000 g	1. 180 W 2. 90 W	1. 10 mins 2. 10-15 mins
Poultry or poultry portions [1,2]	600 g	1. 180 W 2. 90 W	1. 5 mins 2. 10-15 mins
Poultry or poultry portions [1,2]	1200 g	1. 180 W 2. 90 W	1. 10-15 mins 2. 10-15 mins
Fish fillet, fish steak or fish slices [1,2]	400 g	1. 180 W 2. 90 W	1. 3 mins 2. 10-15 mins
Whole fish [1]	300 g	1. 180 W 2. 90 W	1. 2 mins 2. 3-5 mins
Whole fish [1]	600 g	1. 180 W 2. 90 W	1. 5 mins 2. 8-10 mins
Vegetables, e.g. peas [3]	300 g	180 W	5-10 mins
Fruit, e.g. raspberries [3]	300 g	180 W	6-9 mins
Fruit, e.g. raspberries [3]	500 g	1. 180 W 2. 90 W	1. 6-8 mins 2. 5-10 mins
Butter, defrosting [4]	125 g	1. 180 W 2. 90 W	1. 1 min 2. 1-2 mins
Butter, defrosting [4]	250 g	1. 180 W 2. 90 W	1. 1 min 2. 2-4 mins
Loaf of bread [1]	500 g	1. 180 W 2. 90 W	1. 3 mins 2. 5-10 mins
Loaf of bread [1]	1000 g	1. 180 W 2. 90 W	1. 5 mins 2. 9-10 mins
Cakes, plain, e.g. sponge cake [5,6]	500 g	90 W	5-10 mins
Cakes, plain, e.g. sponge cake [5,6]	750 g	1. 180 W 2. 90 W	1. 3-5 mins 2. 4 mins
Cakes, moist, e.g. fruit flan, cheesecake [5]	500 g	1. 180 W 2. 90 W	1. 3 mins 2. 3-5 mins
Cakes, moist, e.g. fruit flan, cheesecake [5]	750 g	1. 180 W 2. 90 W	1. 4 mins 2. 5-10 mins

[1] Turn the food several times.
[2] Separate any defrosted parts when turning.
[3] Carefully stir the food occasionally.
[4] Remove all packaging.
[5] Only defrost cakes without icing, whipped cream, gelatine or custard.
[6] Separate the pieces of cake.

Heating up or cooking frozen food with the microwave

Observe the recommended settings for using the microwave to heat food.

Note

Cooking tips

- Use microwave-safe cookware with a lid. You can also use a plate or a microwave cover to cover the dish. Take ready meals out of the packaging.
- Distribute the food flat in the cookware. Food which lies flat cooks more quickly than food which is piled high.
- Place the cookware on the bottom of the cooking compartment.
- The food transfers heat to the cookware. The cookware can become very hot. Use oven gloves.
- Turn or stir the food several times during cooking.
- After cooking, leave the food to rest for 2 to 5 minutes.
- The food will retain most of its natural flavor. Use salt and seasonings sparingly.
- To achieve best results, we recommend that you reheat food or ready meals at 600 watts. If the packaging specifies a higher microwave output setting, extend the time.

Food	Weight	Microwave output setting	Cooking time
Menu, plated meal, ready meal (2-3 components)	300-400 g	600 W	8-10 mins
Soup	400 g	600 W	15-17 mins
Stews	500 g	600 W	10-15 mins
Slices or pieces of meat in sauce, e.g. goulash	500 g	600 W	10-12 mins
Fish, e.g. fillet steaks [1]	400 g	600 W	10-12 mins
Bakes, e.g. lasagne, cannelloni (approx. 3 cm deep)	450 g	600 W	12-15 mins
Side dishes, e.g. rice, pasta [1]	250 g	600 W	3-5 mins
Side dishes, e.g. rice, pasta [1]	500 g	600 W	8-10 mins
Vegetables, e.g. peas, broccoli, carrots [1]	300 g	600 W	7-10 mins
Vegetables, e.g. peas, broccoli, carrots [1]	600 g	600 W	15 mins
Creamed spinach [2]	450 g	600 W	9-12 mins

Tips on defrosting, heating and cooking with the microwave next time

Follow these tips for good results when defrosting, heating and cooking with the microwave.

Issue	Tip
Your food is too dry.	▪ Reduce the cooking time or select a lower microwave power setting. ▪ Cover the food and add more liquid.
The time has elapsed but the food is not defrosted, hot or cooked.	Increase the cooking time. Large quantities and food which is piled high require longer times.
The time has elapsed but your food is not yet done on the inside, but is already overdone on the outside.	▪ Stir occasionally. ▪ Reduce the microwave power setting and increase the cooking time.
After defrosting, the poultry or meat is defrosted on the outside but not defrosted in the middle.	▪ Reduce the microwave power setting. ▪ Turn large pieces of frozen food several times.

17.3 Heating

With your appliance you can heat food.

Heating food in the microwave

Observe the recommended settings for using the microwave to heat food.

[1] Add a little liquid to the food.
[2] Cook the food without any additional water.

⚠ WARNING – Risk of scalding!
There is a possibility of delayed boiling when a liquid is heated. This means that the liquid reaches the boiling temperature without the usual steam bubbles rising to the surface. Exercise caution even when only gently shaking the container. The hot liquid may suddenly boil over and splatter.
- Always place a spoon in the container when heating liquids. This prevents delayed boiling.

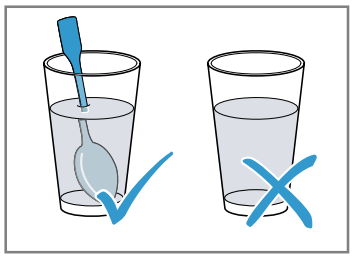

ATTENTION
Metal touching the wall of the cooking compartment will cause sparks, which may damage the appliance or the inner door pane.
- Metal (e.g. a spoon in a glass) must be kept at least 2 cm from the cooking compartment walls and the inside of the door.

Note
Cooking tips
- Use microwave-safe cookware with a lid. You can also use a plate or a microwave cover to cover the dish. Take ready meals out of the packaging.
- Place the cookware on the bottom of the cooking compartment.
- Turn or stir the food several times during cooking.
- After cooking, leave the food to rest for 2 to 5 minutes.
- The food transfers heat to the cookware. The cookware can become very hot. Use oven gloves.
- To achieve best results, we recommend that you reheat food or ready meals at 600 watts. If the packaging specifies a higher microwave output setting, extend the time.

Food	Weight	Microwave output setting	Cooking time
Plated meal, chilled	1 portion	600 W	5-8 mins
Beverages [1,2,3]	125 ml	boost	30-40 secs
Beverages [1,2,3]	200 ml	boost	1 mins
Beverages [1,2,3]	500 ml	boost	2 mins
Baby food, e.g. baby bottles [4,5,3]	50 ml	600 W	Approx. 20-30 secs
Baby food, e.g. baby bottles [4,5,3]	100 ml	600 W	40-50 secs
Baby food, e.g. baby bottles [4,5,3]	200 ml	600 W	60-70 secs
Soup, 1 cup [6]	175 g each	600 W	2-2.5 mins
Soup, 2 cups [6]	175 g each	600 W	3-4 mins
Meat in sauce [7]	500 g	600 W	7-10 mins
Stew [6]	400 g	600 W	4 mins
Stew [6]	800 g	600 W	6-7 mins
Vegetables, 1 portion [6]	150 g	600 W	2-2.5 mins
Vegetables, 2 portions [6]	300 g	600 W	3-4 mins

17.4 Cooking

With your appliance you can cook food.

[1] Place a spoon in the glass.
[2] Do not overheat alcoholic drinks.
[3] Always check the temperature.
[4] Heat up baby food without the teat or lid.
[5] Always shake the food well after heating.
[6] Check the food occasionally.
[7] Separate the slices of meat.

Cooking with the microwave

Note

Cooking tips

- Place the cookware on the bottom of the cooking compartment.
- Distribute the food flat in the cookware. Food which lies flat cooks more quickly than food which is piled high.
- Use microwave-safe cookware with a lid. You can also use a plate or a microwave cover to cover the dish. Take ready meals out of the packaging.
- The food will retain most of its natural flavor. Use salt and seasonings sparingly.
- After cooking, leave the food to rest for 2 to 5 minutes.
- The food transfers heat to the cookware. The cookware can become very hot. Use oven gloves.
- To achieve best results, we recommend that you reheat food or ready meals at 600 watts. If the packaging specifies a higher microwave output setting, extend the time.

Food	Weight	Microwave output setting	Cooking time
Whole chicken, fresh, without giblets [1]	1200 g	600 W	25 – 30 min.
Fish fillet, fresh [2]	400 g	600 W	7 – 8 min.
Vegetables, fresh [3,2,4]	250 g	600 W	5 – 6 min.
Vegetables, fresh [3,2,4]	500 g	600 W	10 – 12 min.
Potatoes [3,2,4]	250 g	600 W	7 – 9 min.
Potatoes [3,2,4]	500 g	600 W	10 – 12 min.
Potatoes [3,2,4]	750 g	600 W	15 – 20 min.
Rice [5,4]	125 g	1. 600 W 2. 180 W	1. 4 – 5 min. 1. 12 – 15 min.
Rice [5,4]	250 g	1. 600 W 2. 180 W	1. 6 – 8 min. 1. 15 – 18 min.
Desserts, e.g. blancmange (instant) [4]	500 ml	600 W	5 – 8 min.
Fruit compote [4]	500 g	600 W	9 – 12 min.

Blancmange made from blancmange powder

⚠ WARNING – Risk of burns!

Heated food gives off heat. The cookware may become hot.

- Always use oven gloves to remove cookware or accessories from the cooking compartment.

1. Mix together one packet of blancmange powder with sugar and a little milk in a tall microwave-suitable bowl in accordance with the package instructions so that there are no lumps.
2. Add the rest of the milk and stir again.
3. Place the bowl into the cooking compartment and close the appliance door.
4. Set the appliance according to the recommended settings.
5. Only stir for the first time after 3 minutes. Then stir again every minute until it reaches the required consistency.
   The cooking time depends on the temperature of the milk and the container that is used.

Microwave popcorn

⚠ WARNING – Risk of burns!

Airtight packaging may burst when food is heated.

- Always follow the instructions on the packaging.
- Always use oven gloves to remove the dishes from the cooking compartment.

ATTENTION

If you prepare several bags of microwave popcorn in immediate succession at a microwave power level that is too high, the cooking compartment may be damaged.

- Leave the appliance to cool down for several minutes between each use.
- Never set a microwave power level that is too high.
- Use a maximum microwave output of 600 watts.
- Always place the popcorn bag on a glass plate.

[1] Turn the dish halfway through the cooking time.
[2] Add a little liquid to the food.
[3] Cut into pieces of equal size.
[4] Carefully stir the food occasionally.
[5] Add double the amount of liquid.

Note
Cooking tips
- Place the cookware on the bottom of the cooking compartment.
- Use shallow, heat-resistant glass ovenware. Do not use porcelain or deep plates.
- Place the popcorn bag onto the cookware with the labelled side facing downwards.
- Adjust the cooking time to the quantity.
- To prevent the popcorn from burning, after 1 minute 30 seconds, briefly take the popcorn bag out of the oven and shake it. Take care as the popcorn will be hot.

Food	Weight	Microwave power setting	Duration
Microwave popcorn [1]	1 bag, 100 g	600 W	2.5 mins

17.5 Test dishes

These overviews have been produced for test institutes to facilitate appliance testing in accordance with EN 60350-1:2013 or IEC 60350-1:2011 and EN 60705:2012, IEC 60705:2010.

Cooking with the microwave

Food	Microwave power setting in W	Cooking time in mins	Note:
Custard, 1000 g	1. 600 W 2. 180 W	1. 11-12 mins 2. 8-10 mins	Pyrex dish
Sponge, 475 g	600 W	7-9 mins	Pyrex dish, 22 cm diameter
Meat loaf, 900 g	600 W	20-25 mins	Pyrex dish, 28 cm diameter, long
Plated meal, chilled, 1 portion	600 W	5-6 mins	Microwaveable cover

Defrosting with the microwave

Food	Microwave power setting in W	Cooking time in mins	Note:
Meat, 500 g	1. 180 W 2. 90 W	1. 5-6 mins 2. 6-9 mins	Pyrex dish, dia. 24 cm

18 Installation instructions

Observe this information when installing the appliance.

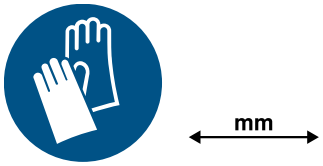

18.1 Scope of delivery

After unpacking all parts, check for any damage in transit and completeness of the delivery.

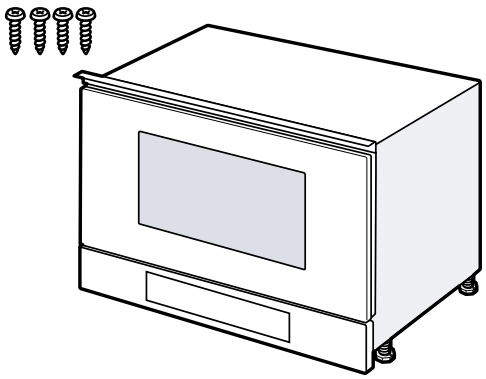

[1] Always place the popcorn bag on a glass plate. Follow the manufacturer's instructions.

⚠ 18.2 Safe installation

Follow these safety instructions when installing the appliance.

- The appliance can only be used safely if it is correctly installed according to the safety instructions. The installer is responsible for ensuring that the appliance works perfectly at its installation location.
- Check the appliance for damage after unpacking it. Do not connect the appliance if it has been damaged in transit.
- Before starting up the appliance, remove any packaging material and adhesive film from the cooking compartment and the door.
- Proceed in accordance with the installation sheets for installing accessories.
- Fitted units must be heat-resistant up to 95 °C, and adjacent unit fronts up to 70 °C.
- Do not install the appliance behind a decorative door or the door of a kitchen unit. There is a risk of overheating.
- Cut-out work on the units should be carried out before installing the appliance. Remove any shavings. Otherwise, the correct operation of electrical components may be adversely affected.
- Only a licensed professional may connect appliances without plugs. Damage caused by incorrect connection is not covered under the warranty.

⚠ WARNING – Risk of injury!

Parts that are accessible during installation may have sharp edges and may lead to cutting injuries.

▸ Wear protective gloves.

⚠ WARNING – Risk of fire!

It is dangerous to use an extended power cord and non-approved adapters.

▸ Do not use extension cables or multiple socket strips.
▸ Only use adapters and power cords approved by the manufacturer.
▸ If the power cord is too short and a longer one is not available, please contact an electrician to have the domestic installation adapted.

18.3 Fitted units

This appliance is only intended to be fully fitted in a kitchen. This appliance is not intended to be used as a tabletop appliance or within a cupboard.

The installation cabinet must not have a back panel behind the appliance. The minimum installation height is 850 mm.
Ventilation slots and intakes must not be covered.
The appliance must be securely fitted once it is installed and must not tip over.

18.4 Electrical connection

In order to safely connect the appliance to the electrical system, follow these instructions.

- The appliance corresponds to protection class I and must only be operated with a protective earth connection.
- The fuse protection must correspond to the power rating specified on the appliance's rating plate and to the local regulations.
- The appliance must be disconnected from the power supply whenever installation work is being carried out.
- The appliance must only be connected using the power cable provided.
- The power cable must be plugged in at the rear of the appliance. A 5 m power cable can be obtained from customer service.
- The power cable must only be replaced with a cable from the original manufacturer. This is available from customer service.

Connecting the appliance to the electricity supply

Note: The appliance must only be connected to a protective contact socket that has been correctly installed.

1. Insert the non-heating appliance plug of the power cable into the appliance.
   Check that the non-heating appliance plug is inserted properly.
2. Insert the mains plug of the appliance into a nearby socket.
   When the appliance is installed, the mains plug of the power cable must be freely accessible. If free access to the mains plug is impossible, an all-pole isolating switch must be integrated into the permanent electrical installation in accordance with the installation regulations.

18.5 Installation in an upper cabinet

Observe the installation dimensions and the safety clearances in a tall unit.

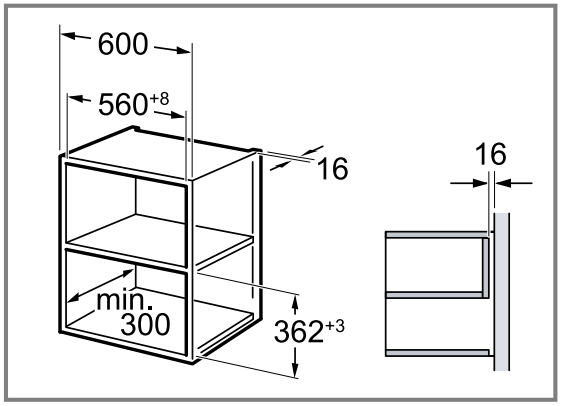

Do not fit the appliance too high up; it must be possible for accessories to be removed easily.
Remove the feet.

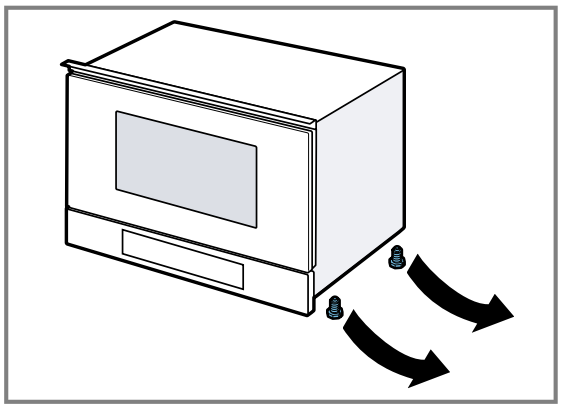

18.6 Installation in a tall unit

Observe the installation dimensions and the safety clearances in a tall unit.

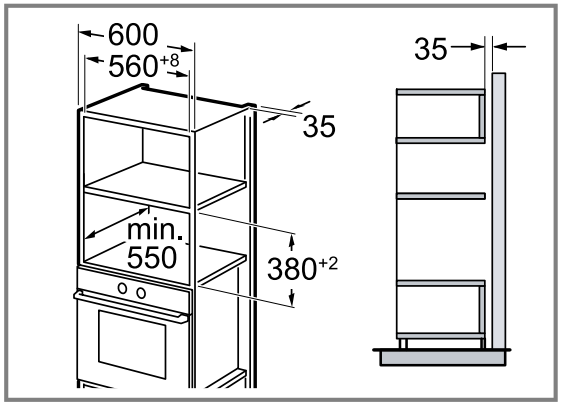

Do not fit the appliance too high up; it must be possible for accessories to be removed easily.
Fit the feet.

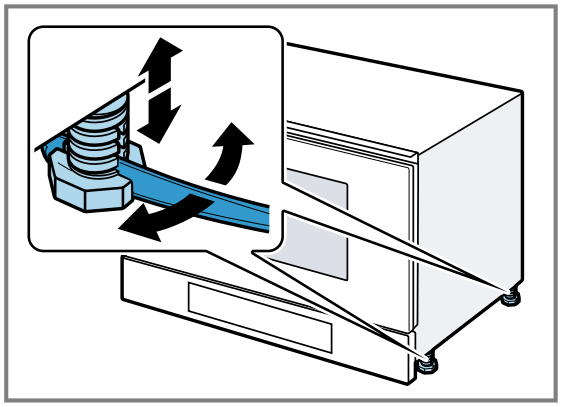

18.7 Installing the appliance

1. Push the appliance in fully.

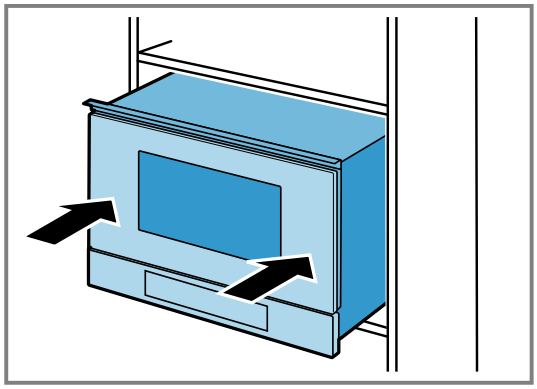

Do not kink or trap the connection cable, or route it over sharp edges.

2. Check the clearance to the adjacent appliances.

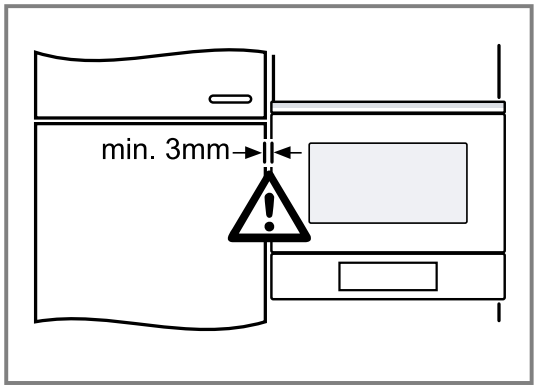

3. **ATTENTION –** When opening the appliance door, the appliance may tilt forwards.
   - ▸ Hold the appliance in position when opening the appliance door.

   Open the appliance door slowly.

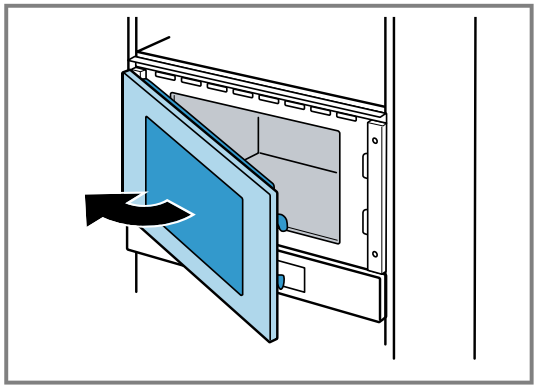

4. Screw the appliance to the unit on the opposite side to the hinges.

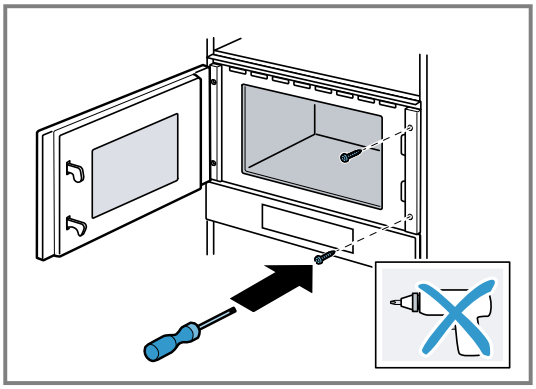

5. Pre-drill the screw holes in the unit on the side with the hinges.

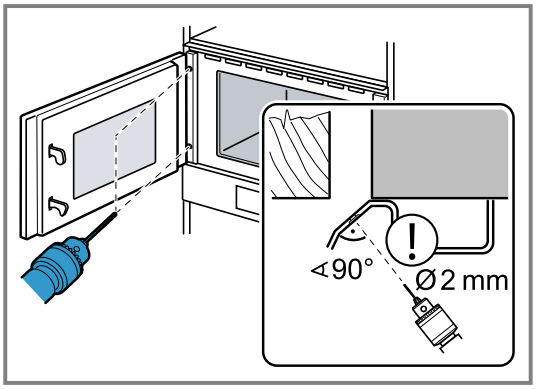

Cover the door hinges.
Use a wood drill with a 2 mm diameter.

6. Remove any shavings from the cooking compartment.
7. Screw the appliance to the unit on the side with the hinges.

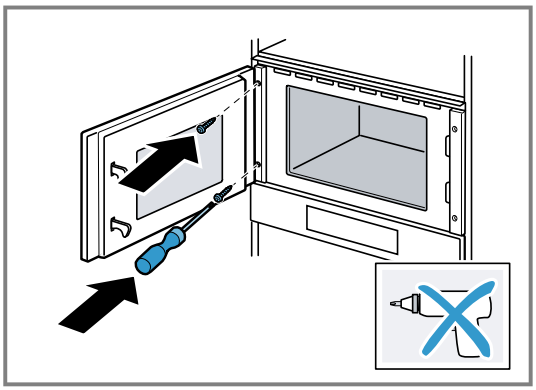

8. Remove any packaging material and adhesive film from the cooking compartment and the door.

18.8 For handleless kitchens with vertical bar handle strips:

1. Attach a suitable filling piece on both sides in order to cover any sharp edges and to guarantee safe installation.

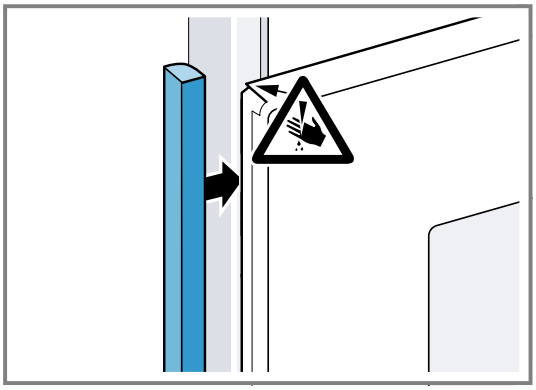

2. Secure the filling piece to the unit.
3. Pre-drill the filling piece and the unit to establish a screw connection.

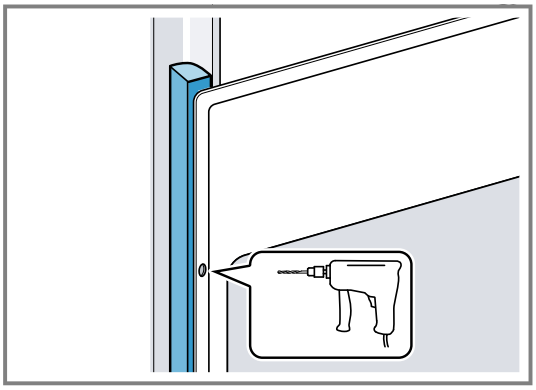

4. Secure the appliance using a suitable screw.

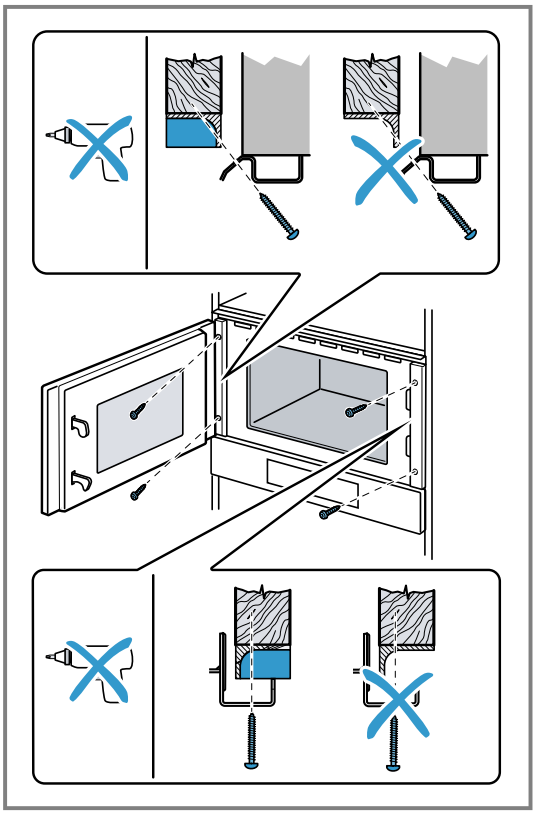

18.9 Removing the appliance

1. Disconnect the appliance from the power supply.
2. Undo the fastening screws.
3. Lift the appliance slightly and pull it out completely.

EN Manufactured by BSH Hausgeräte GmbH under the trademark licence of Siemens AG

Valid within Great Britain:
Imported to Great Britain by
BSH Home Appliances Ltd.
Grand Union House
Old Wolverton Road
Wolverton, Milton Keynes
MK12 5PT
United Kingdom

BSH Hausgeräte GmbH
Carl-Wery-Straße 34
81739 München, GERMANY
siemens-home.bsh-group.com

9001700682 (050807) REG25
en