

Alienware 39 5K OLED Gaming Monitor

AW3926QW

Quick Start Guide

Original Publish Date: June 2026 | A00
Copyright © Dell Inc. or its subsidiaries. All Rights Reserved.



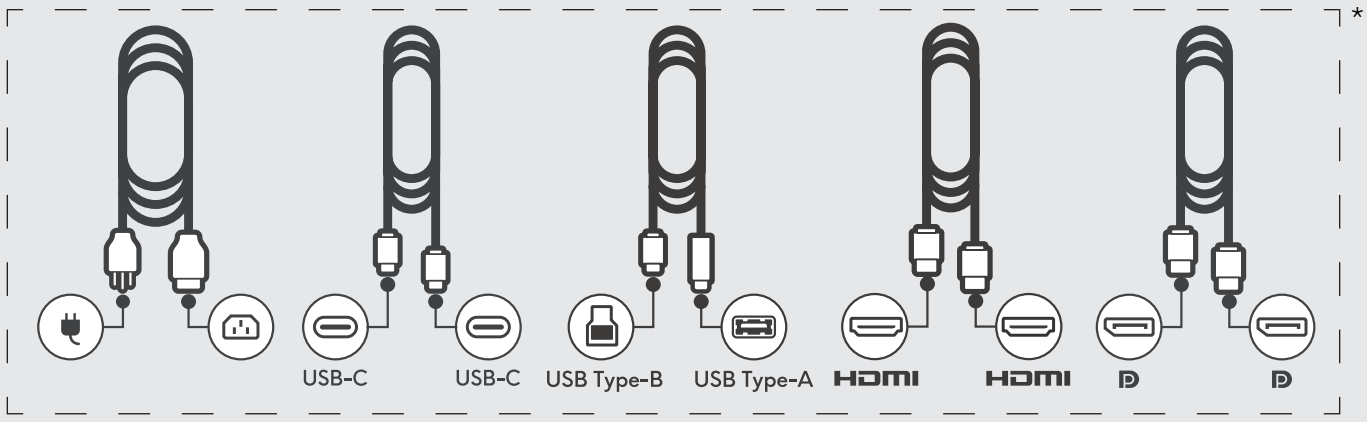

* Included cables vary by country

1

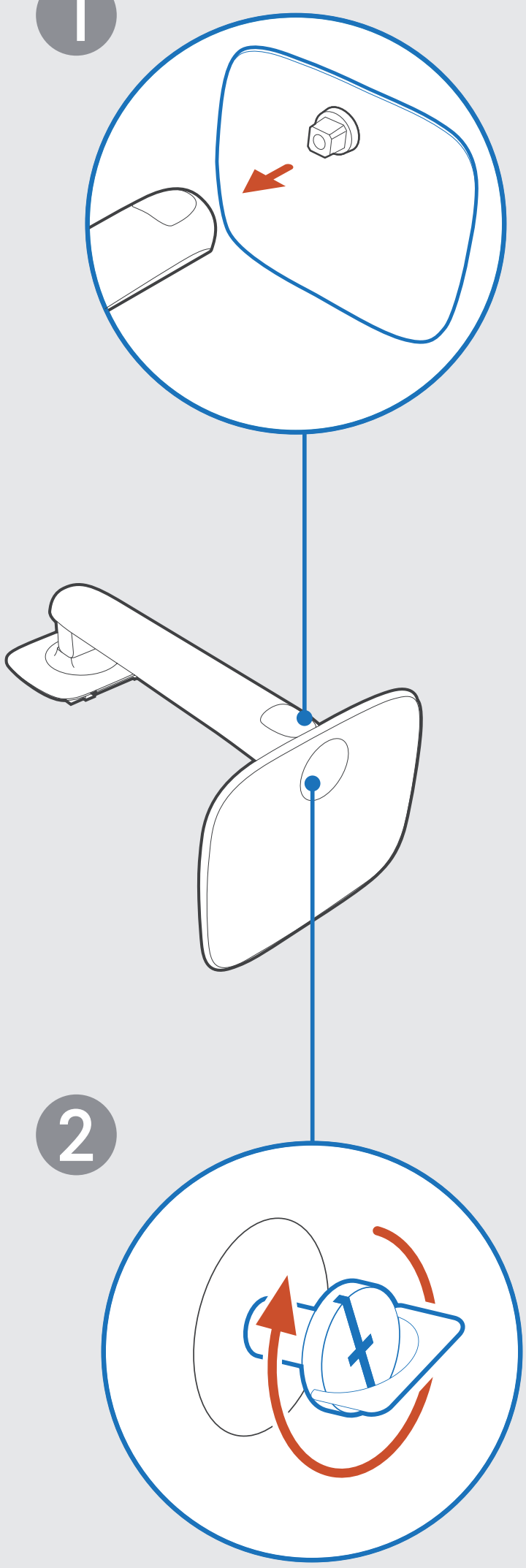

2

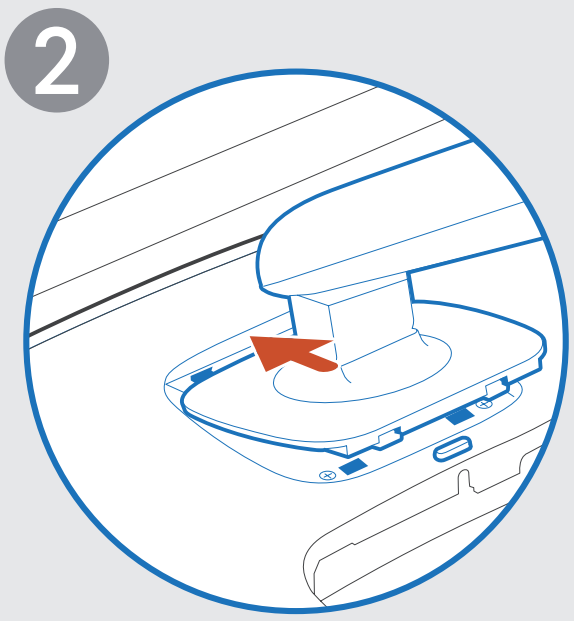
2

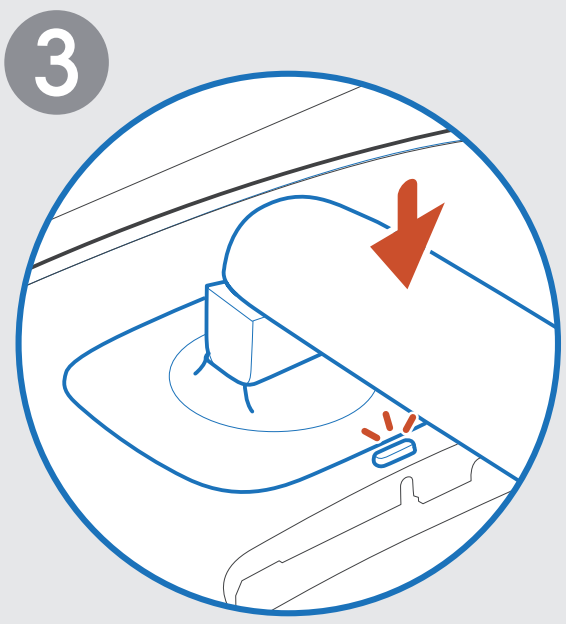
3

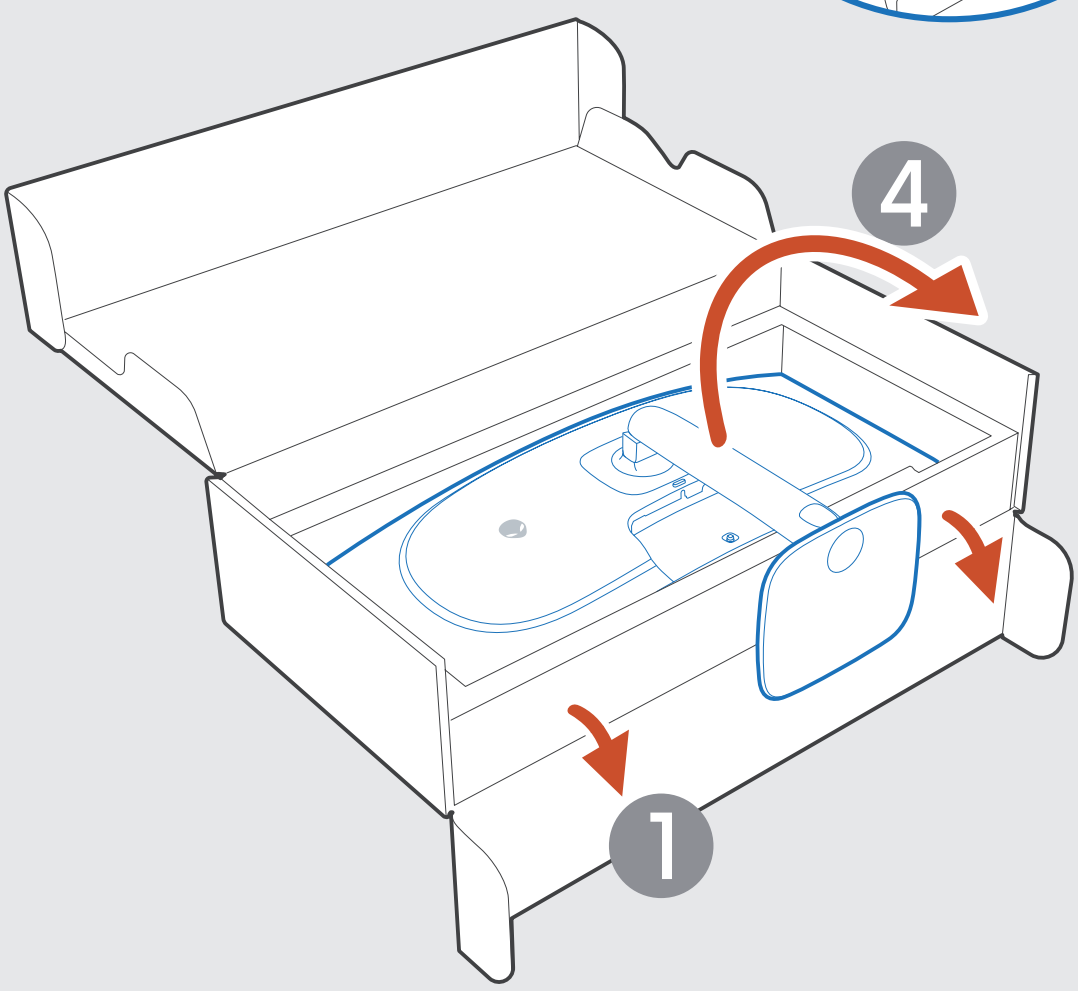
4
1

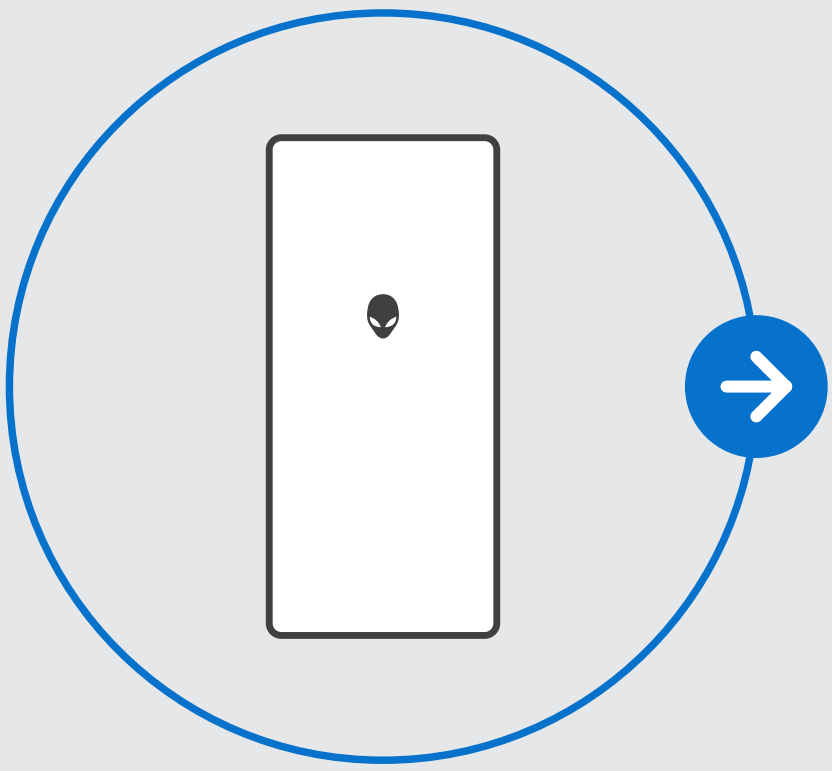

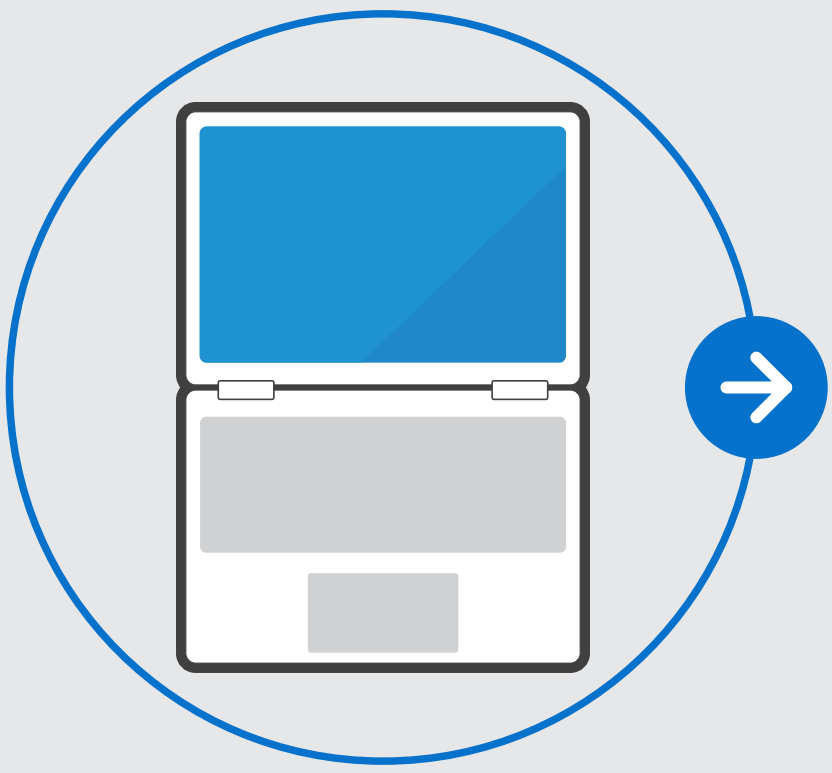

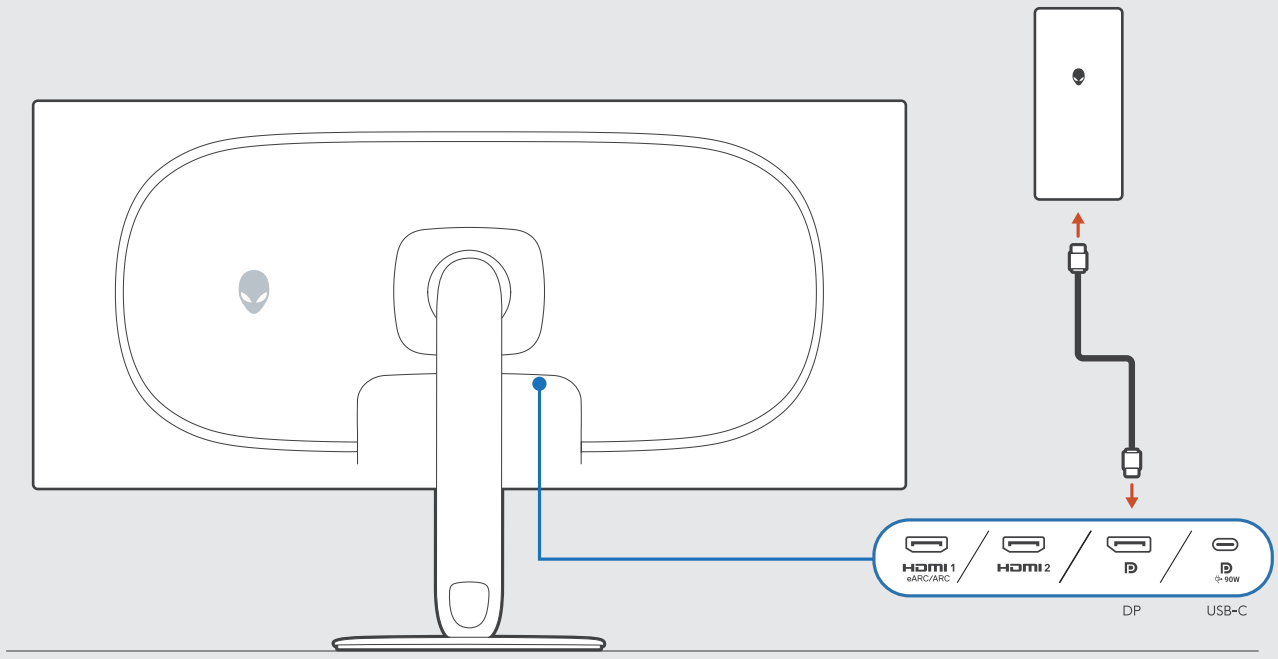
HDMI 1
eARC/ARC
HDMI 2
DP
USB-C

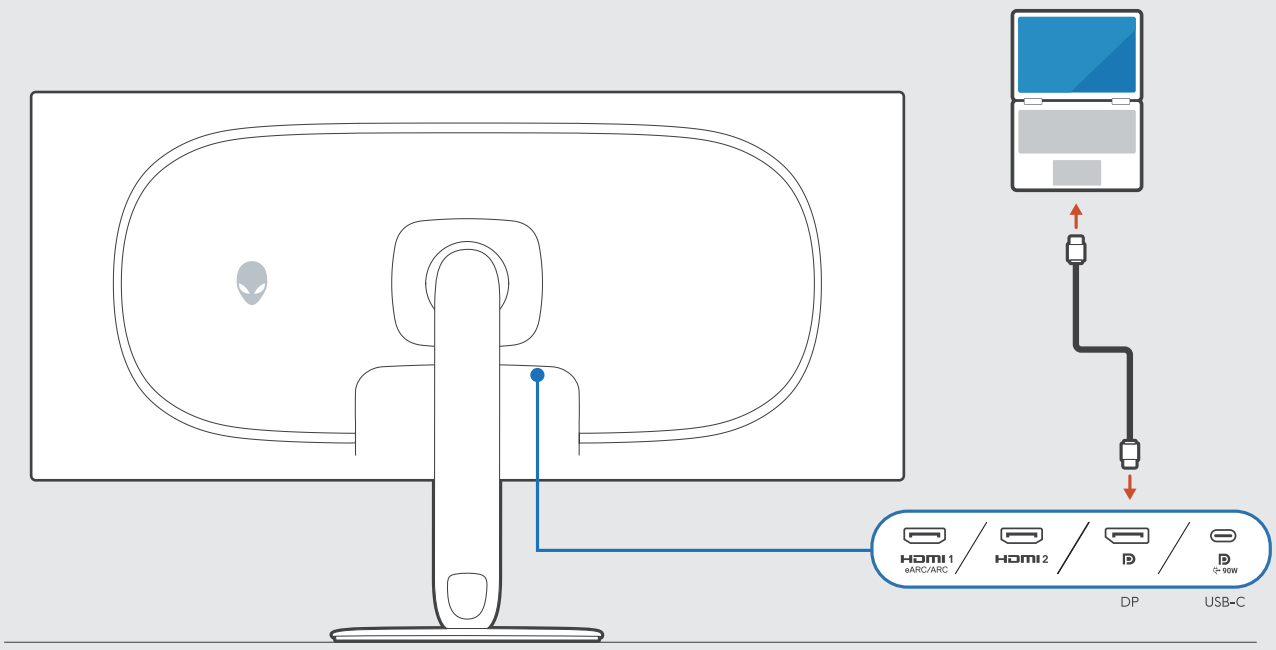
HDMI 1
eARC/ARC
HDMI 2
DP
USB-C

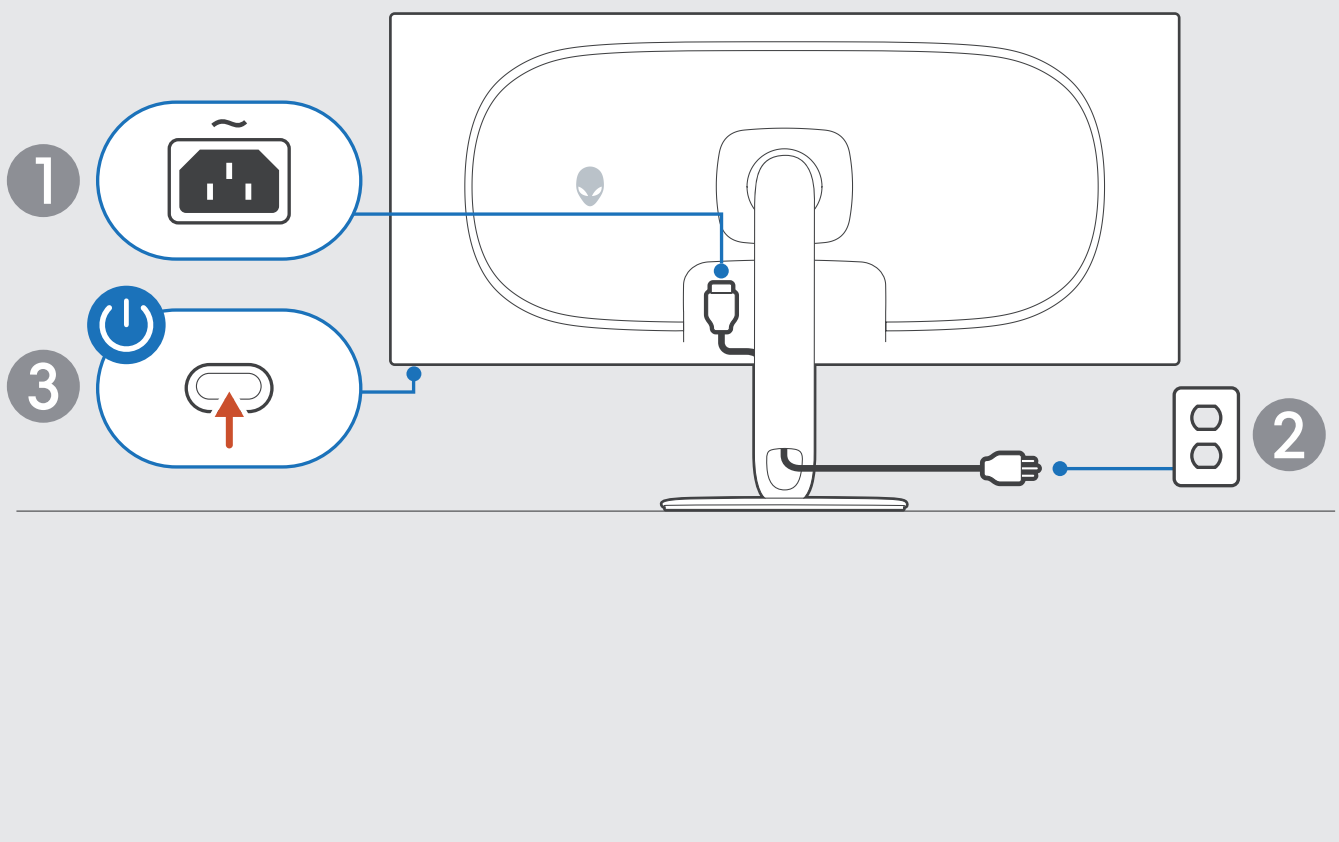
1
2
3


110mm

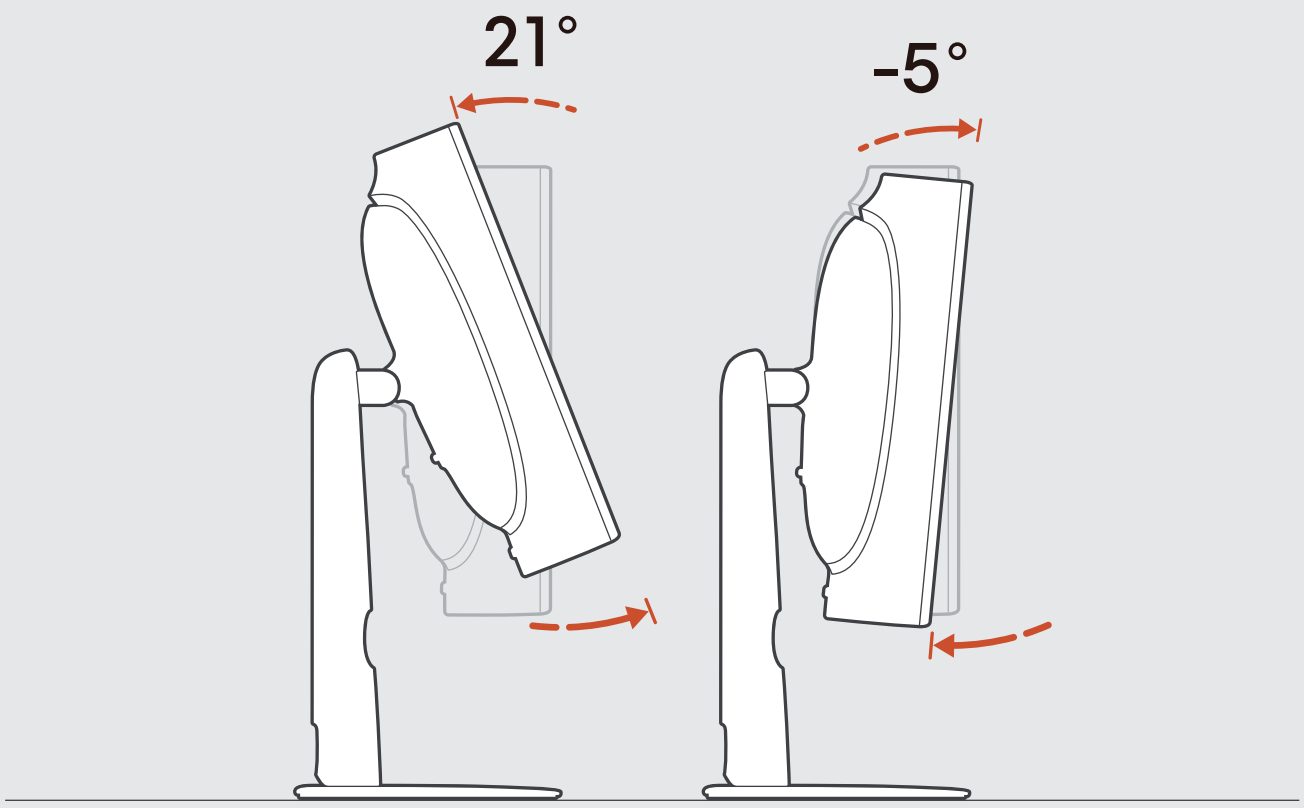
21°
-5°

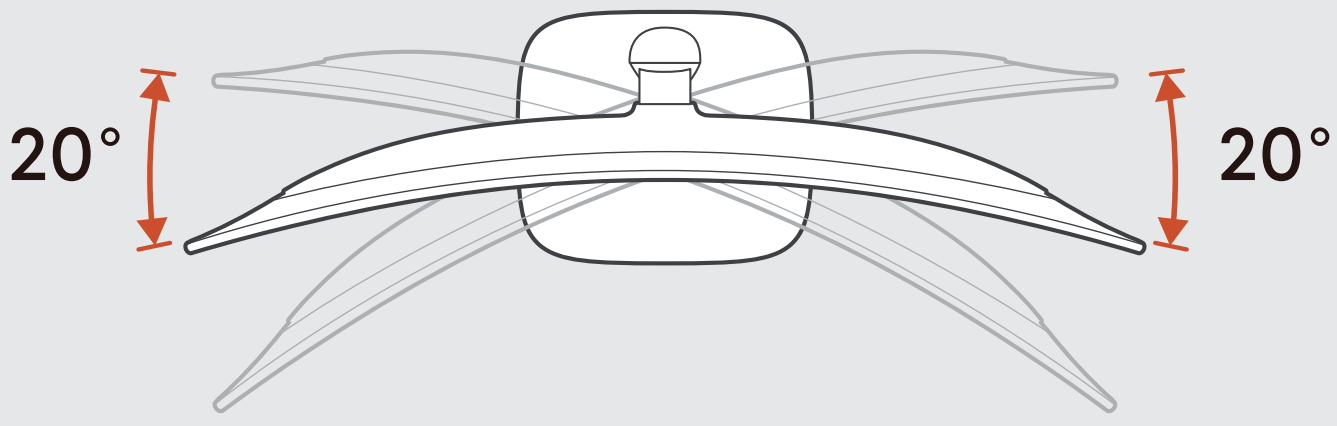
20°
20°


5°
5°

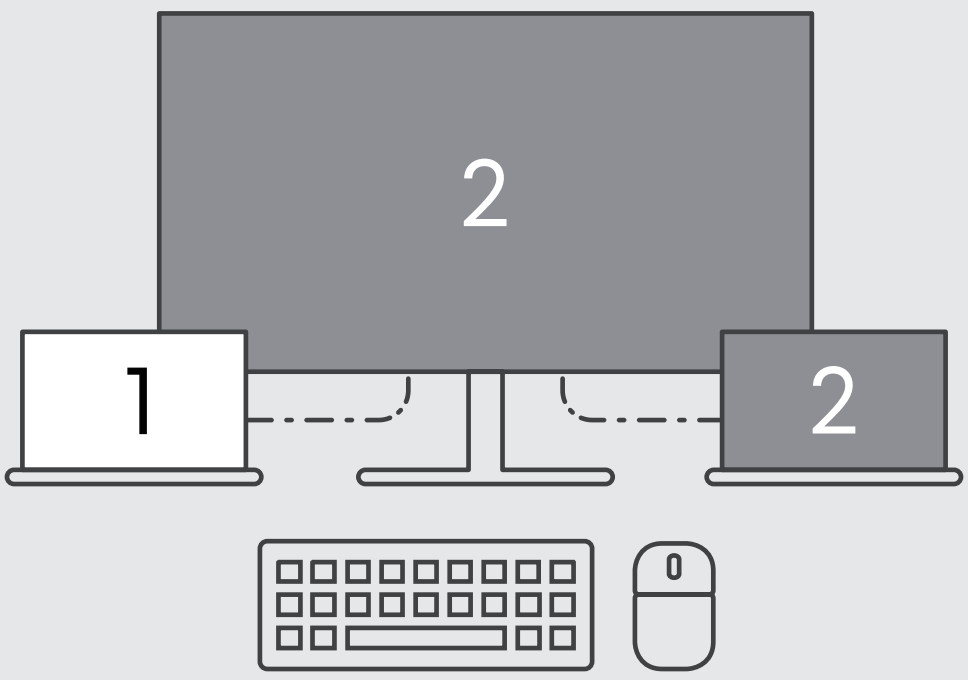

KVM

Dell.com/support/AW3926QW