

# Dell Pro P 24 QHD Monitor

## P2425D

2026-05
Rev A01
Copyright © Dell Inc. or its subsidiaries. All Rights Reserved.



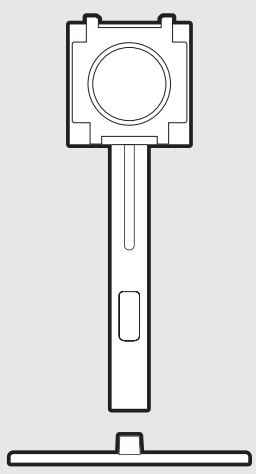




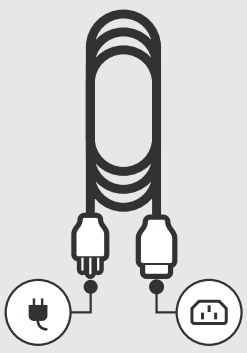

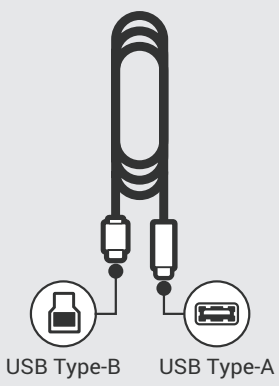


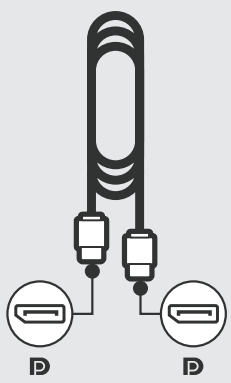

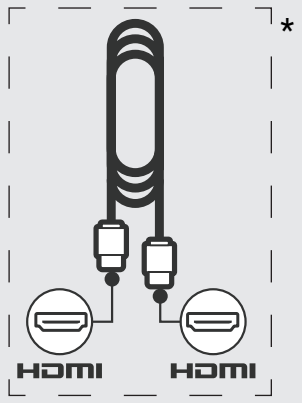


* For select countries only

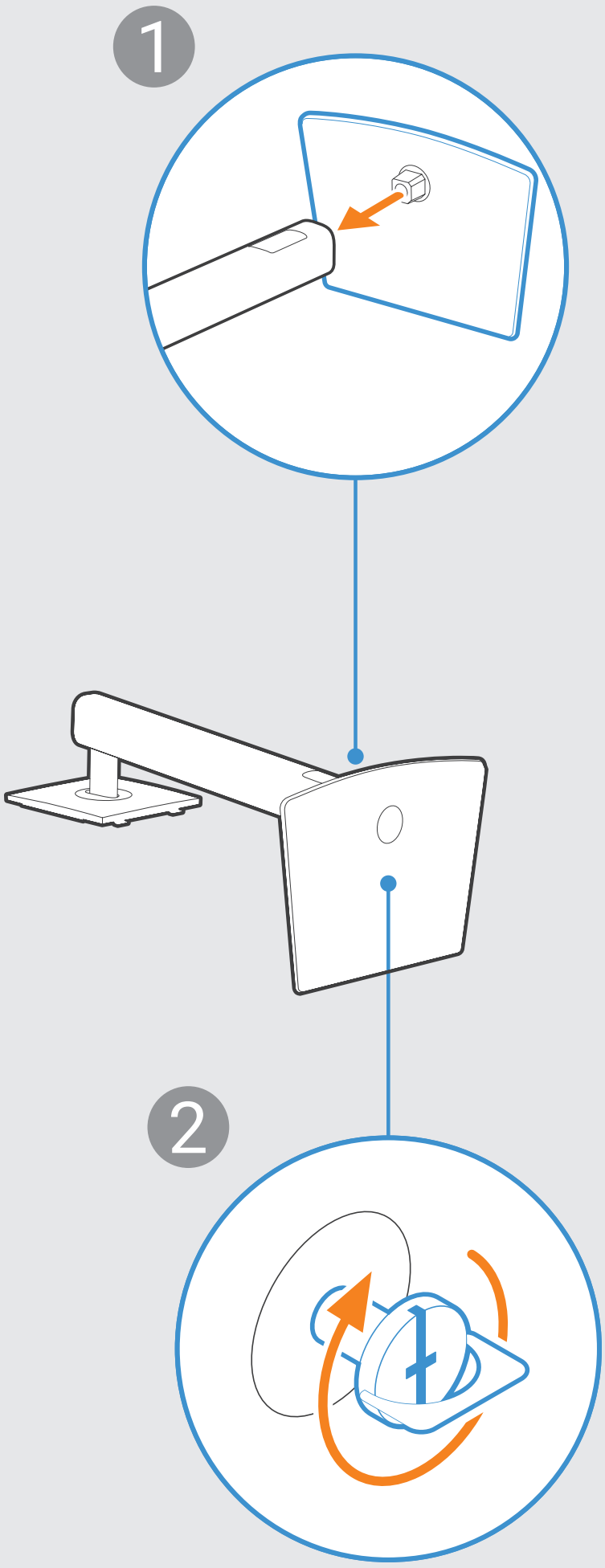
1
2

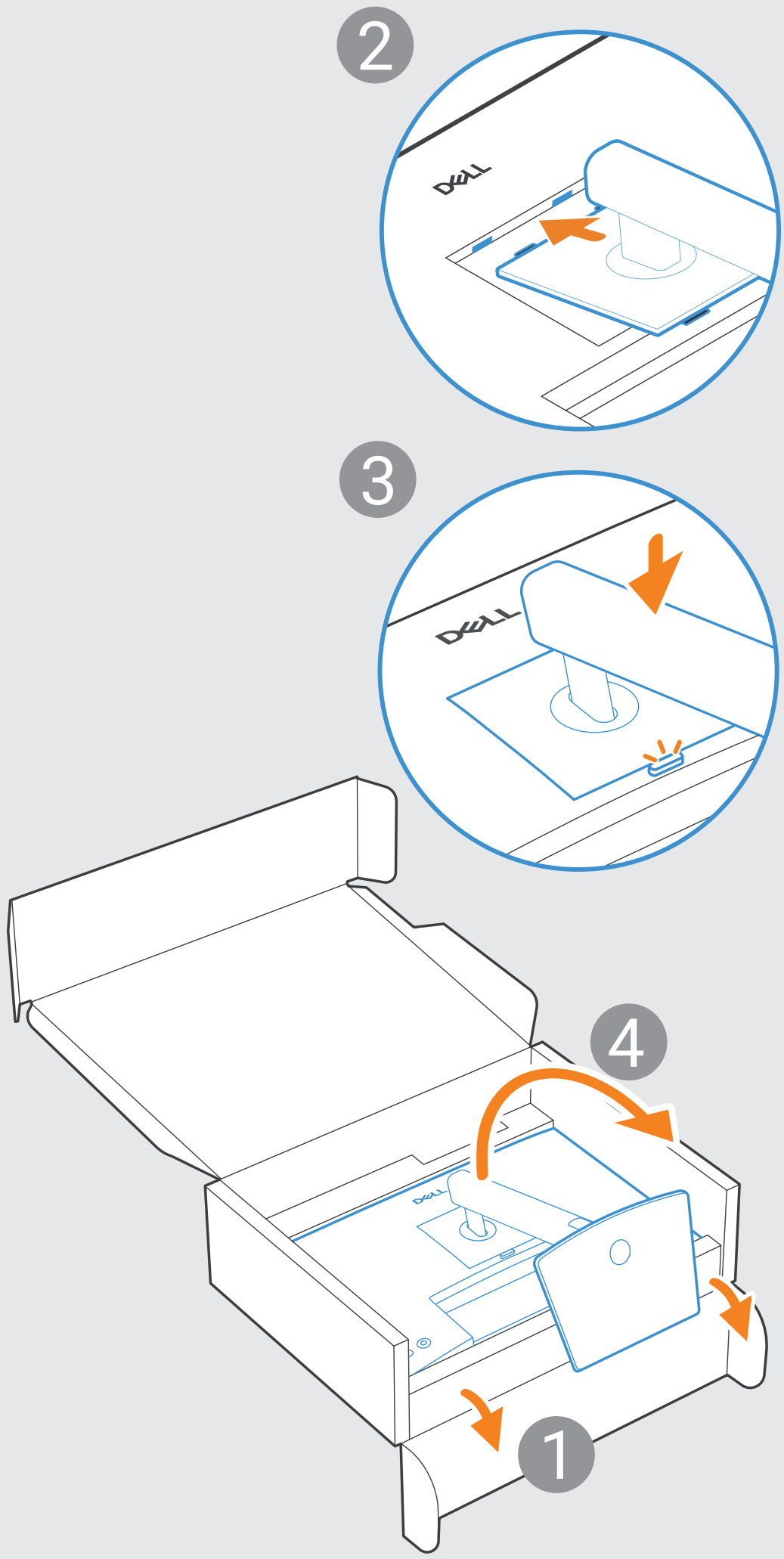
2
3
4
1

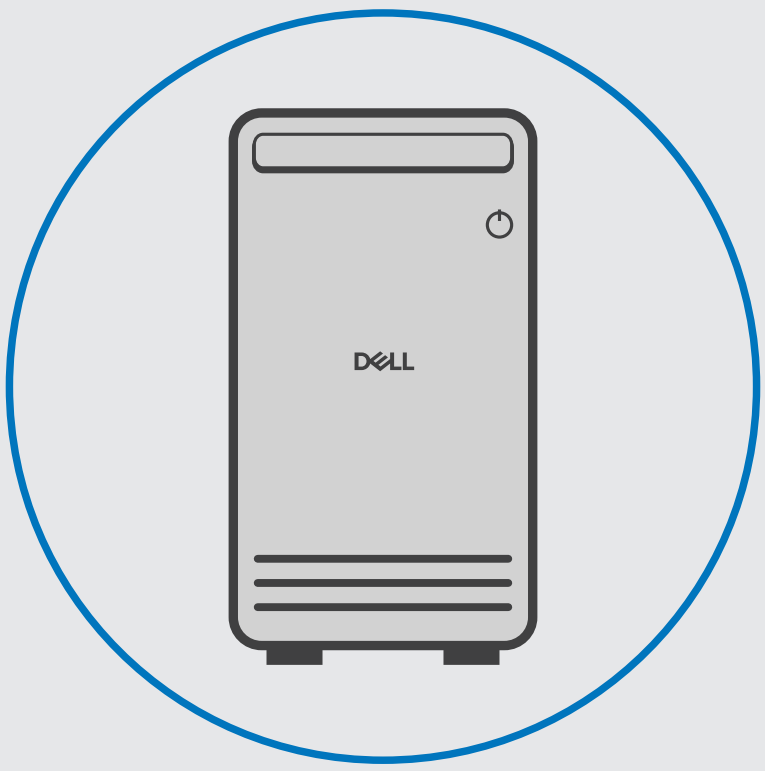
DELL



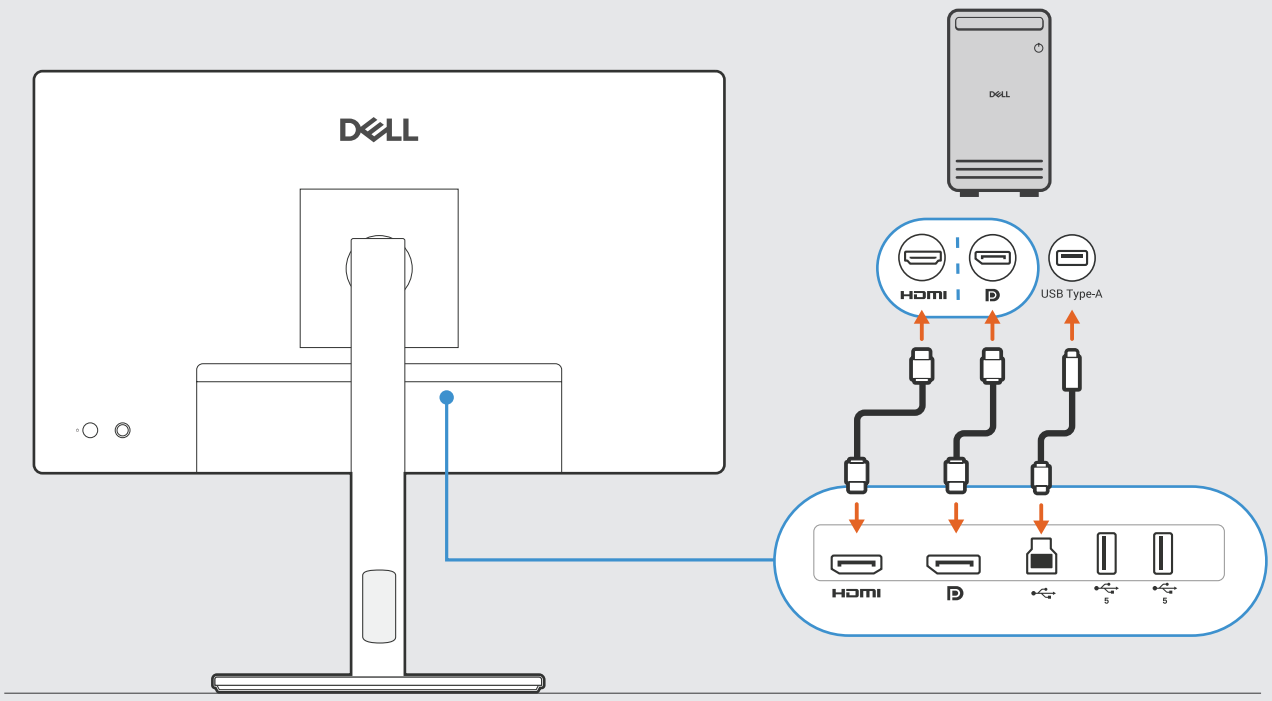
HDMI
USB Type-A
HDMI
5
5

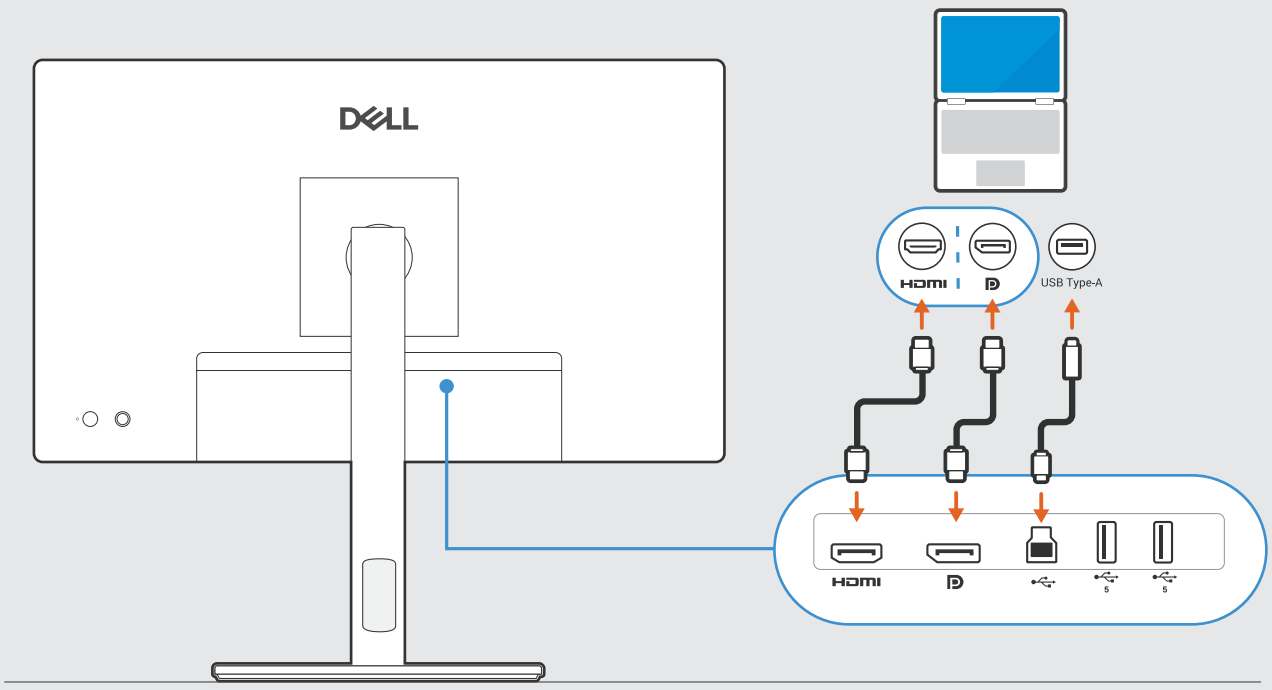
DELL
HDMI
USB Type-A
HDMI
5
5

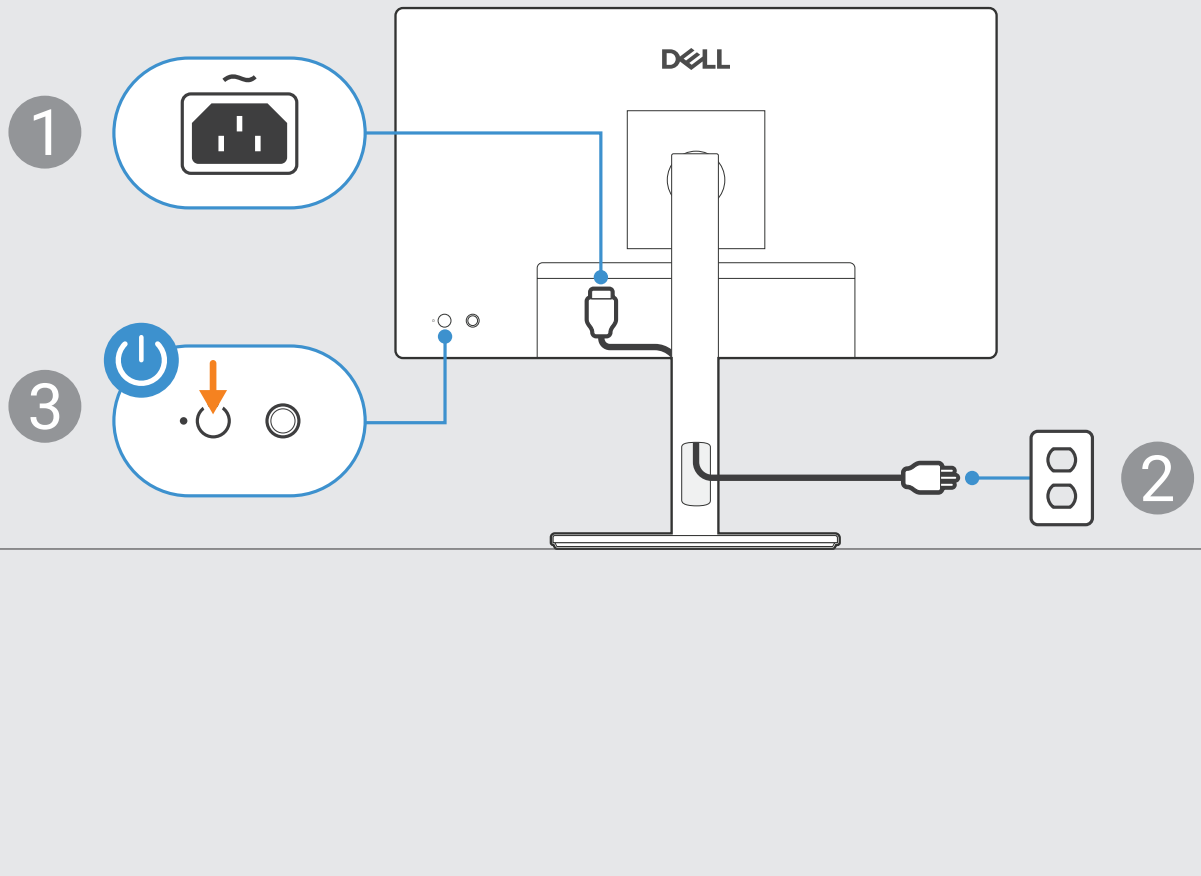
1
2
3

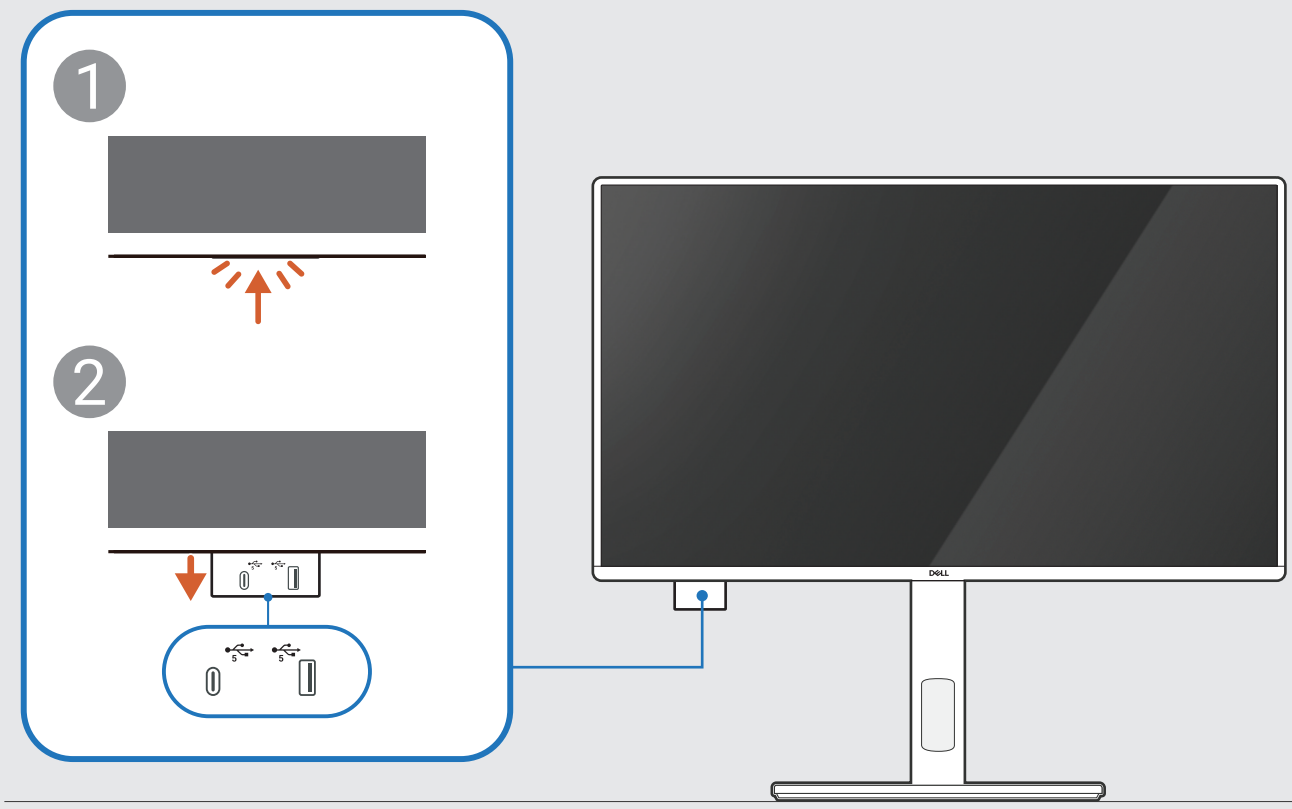
1
2

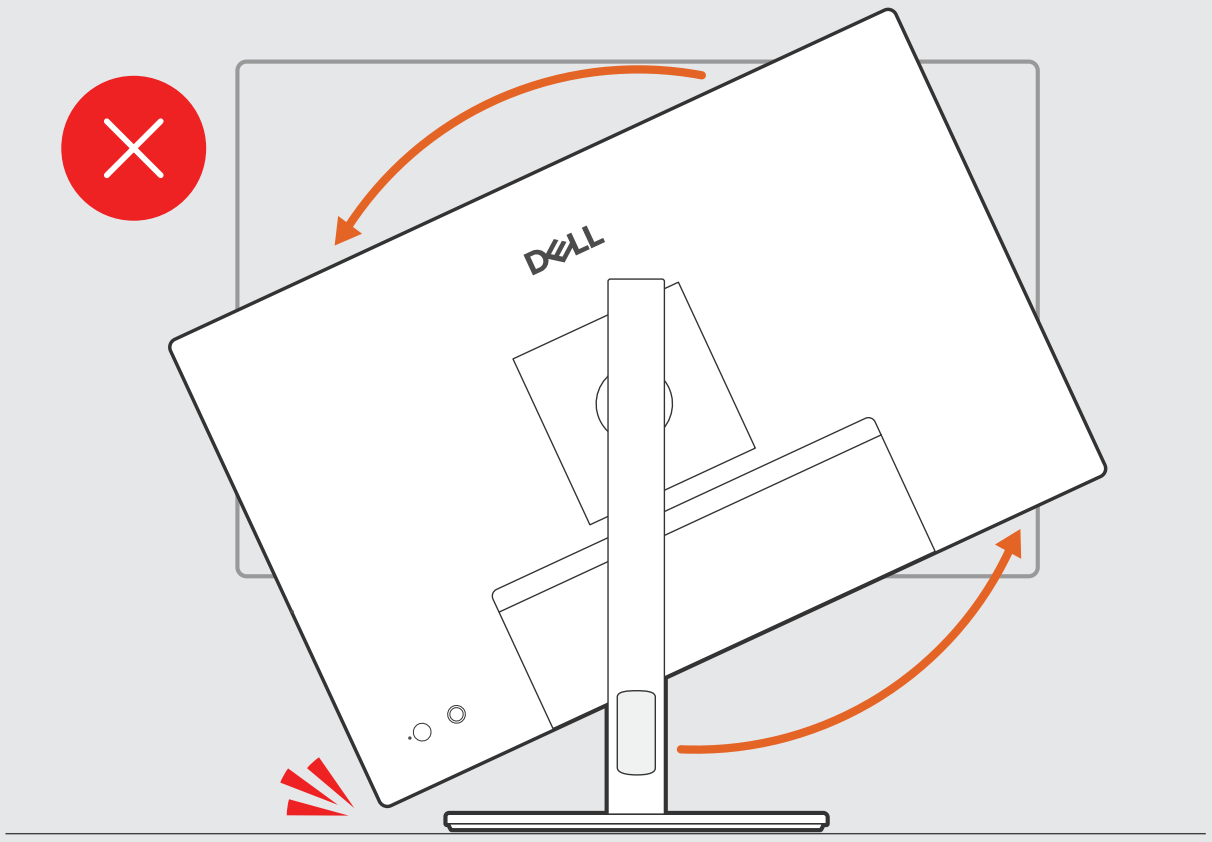

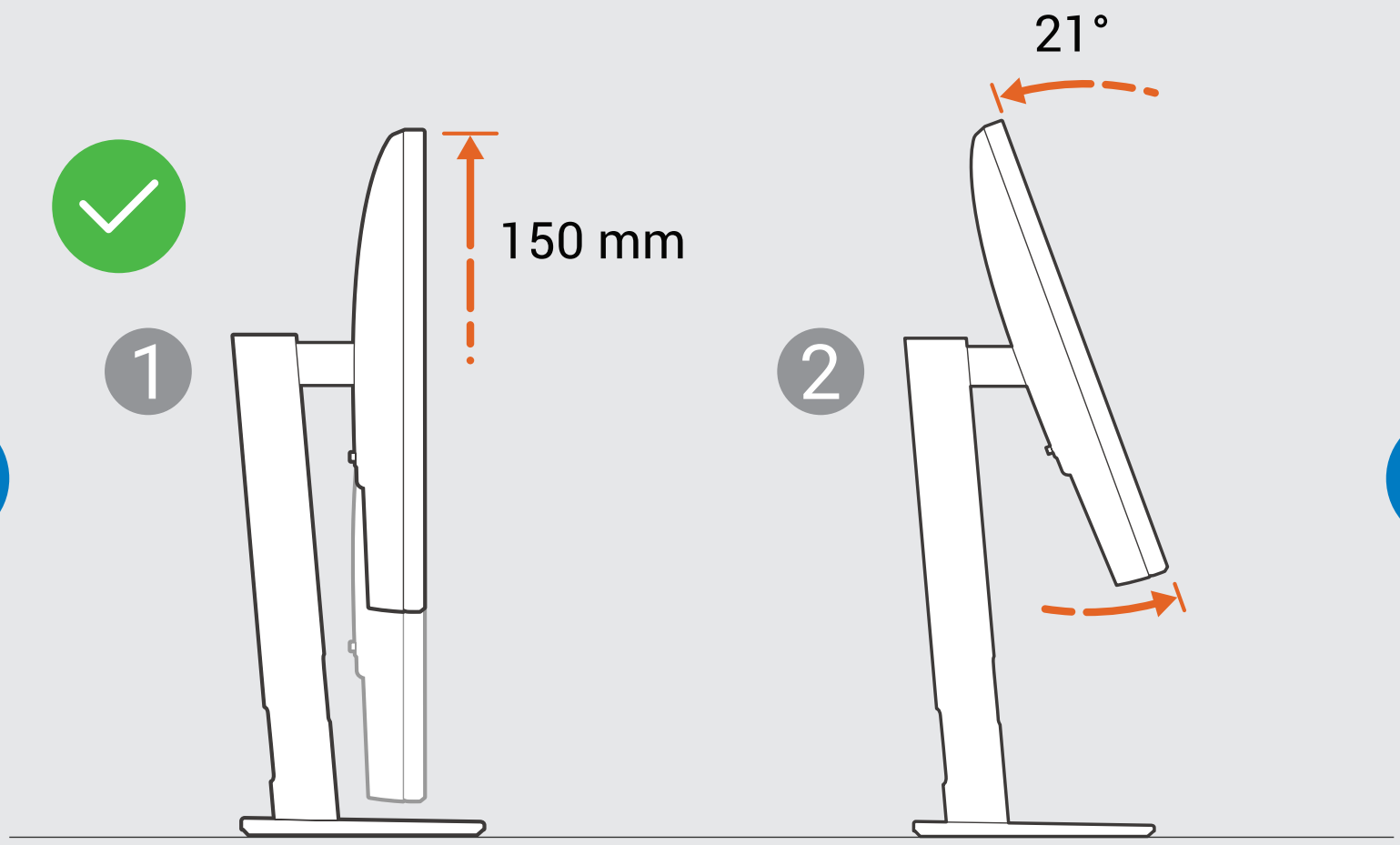
21°
150 mm
1
2

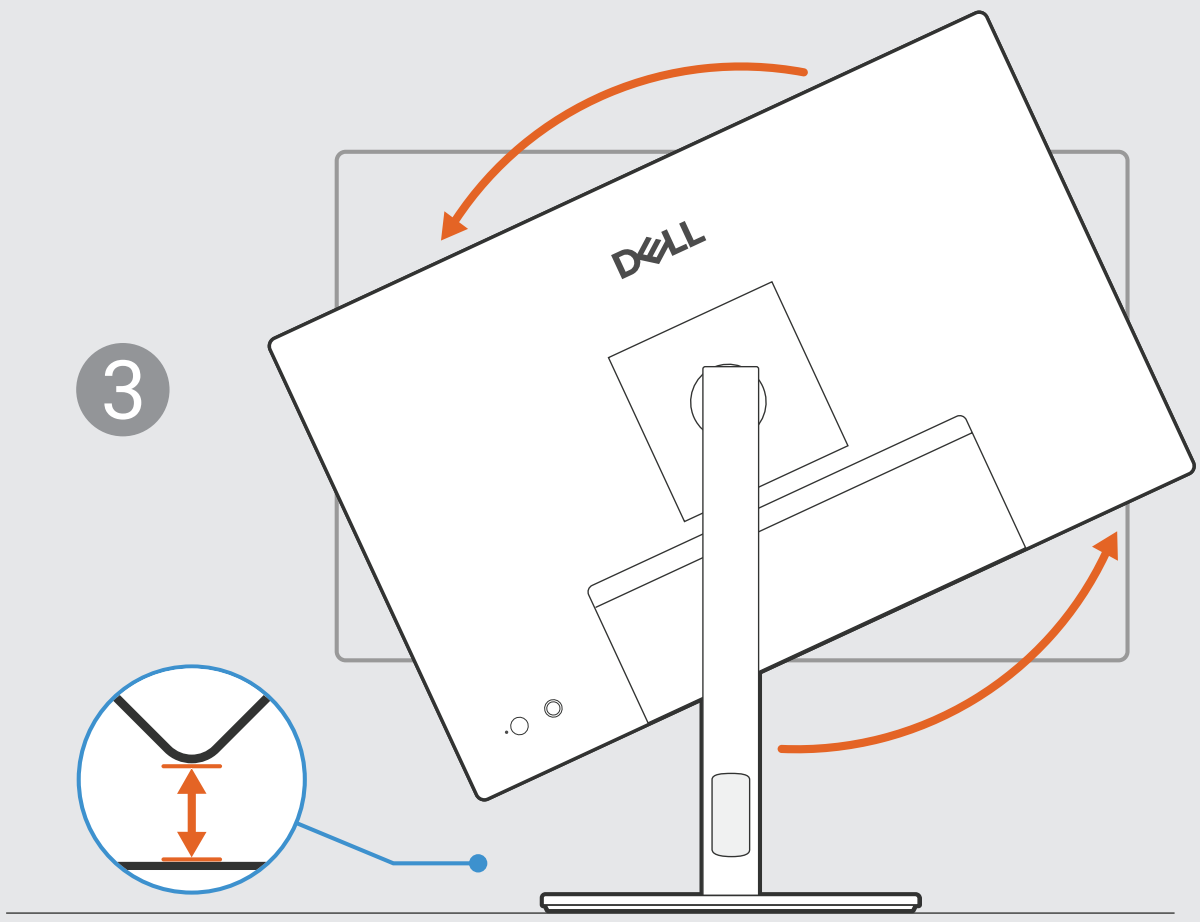
3

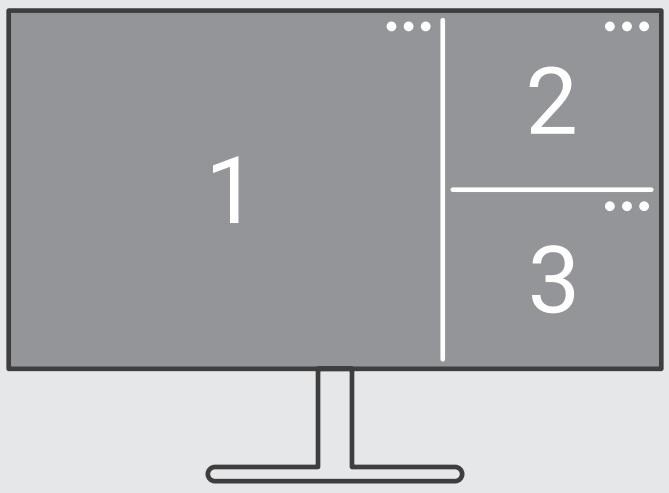


Dell Display and Peripheral Manager
Dell.com/support/ddpm

Dell.com/support/P2425D