

Dell Pro P 32 4K USB-C Hub Monitor P3225QE

2026-05
Rev A01
Copyright © 2025-2026 Dell Inc. or its subsidiaries.
All Rights Reserved.



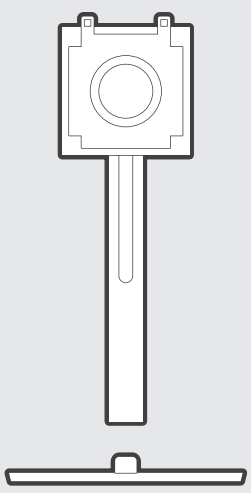

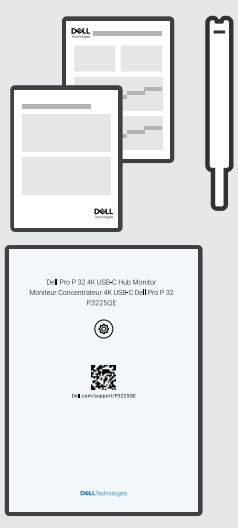
Dell Pro P 32 4K USB-C Hub Monitor
Moniteur Concentrateur 4K USB-C Dell Pro P 32
P3225QE
Dell.com/support/P3225QE

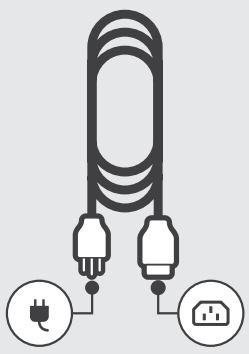

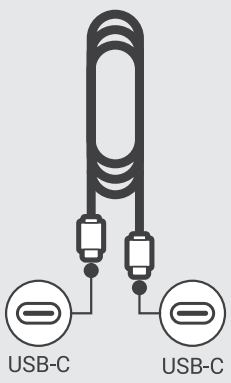
USB-C
USB-C

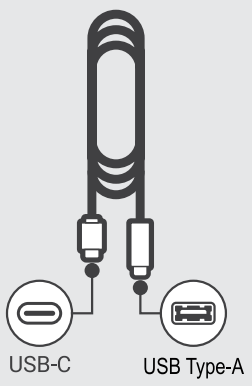
USB-C
USB Type-A

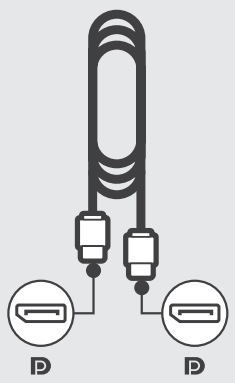

1

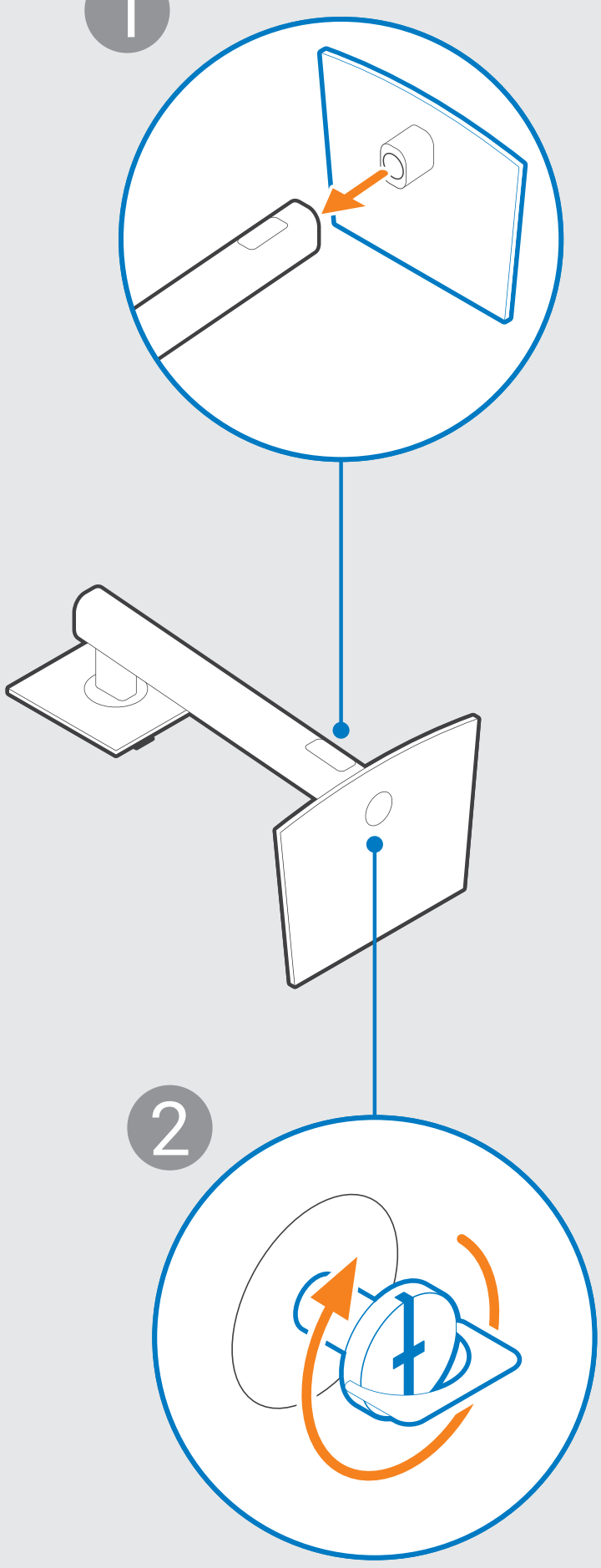

2

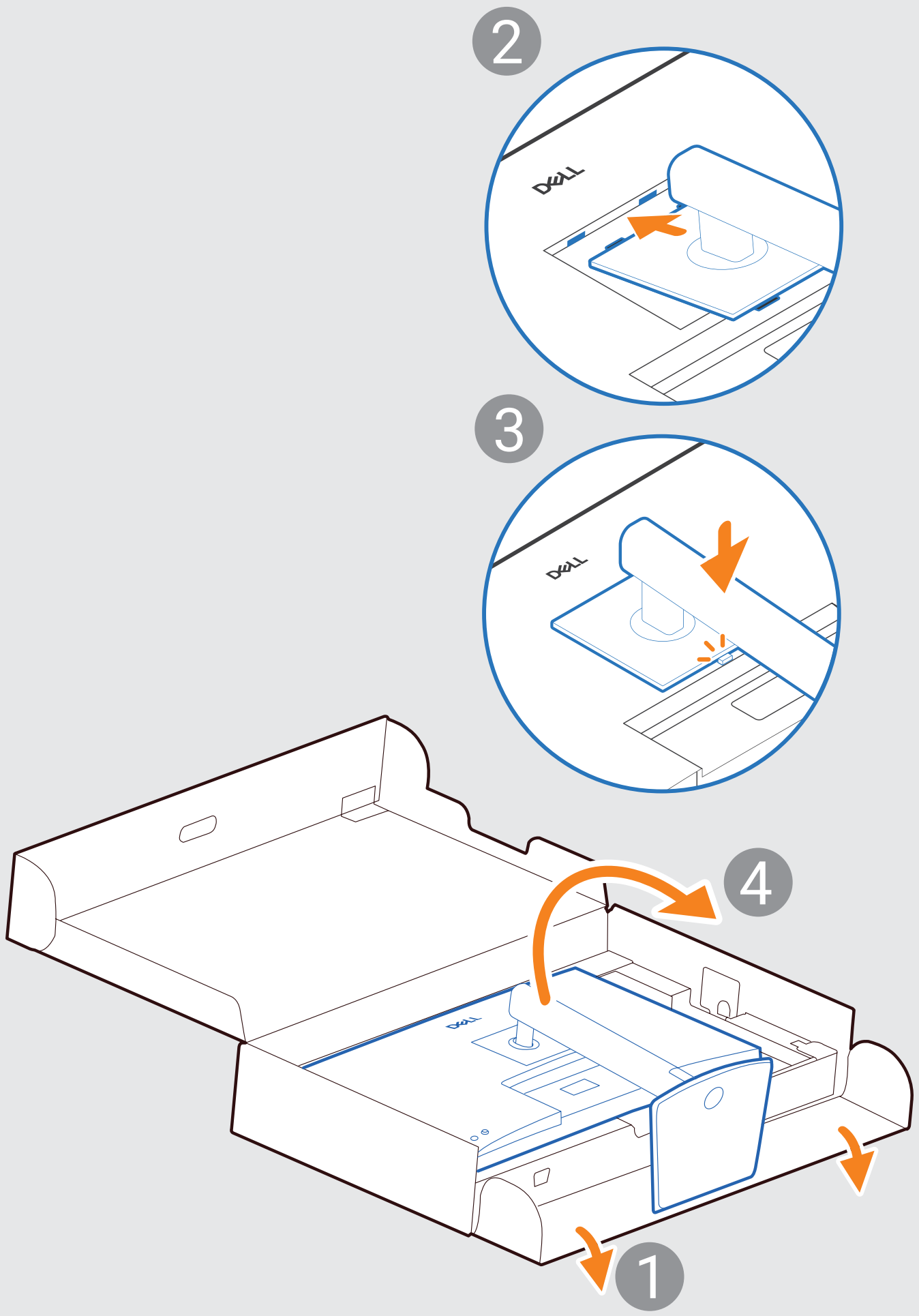
2
3
4
1

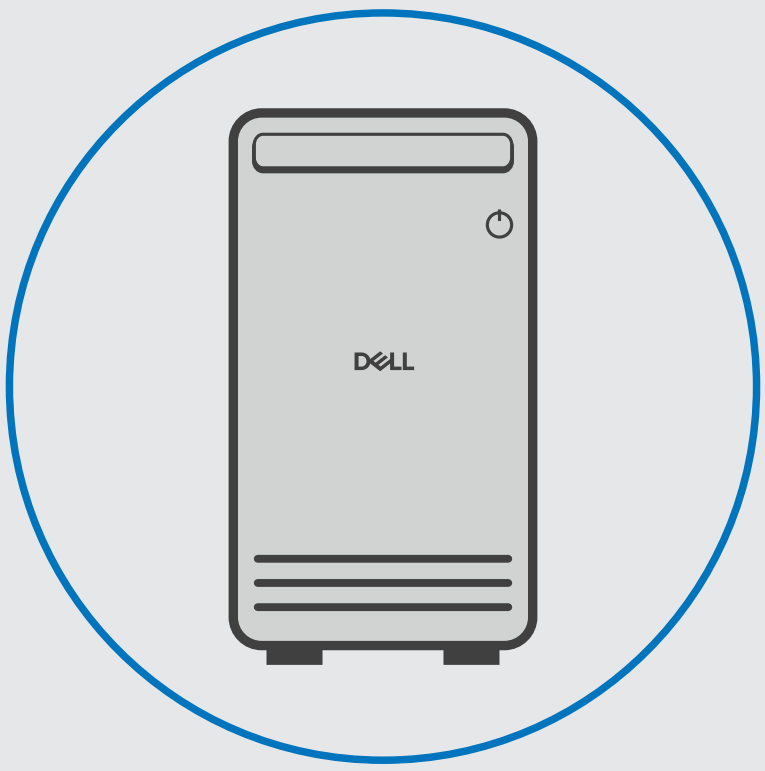
DELL



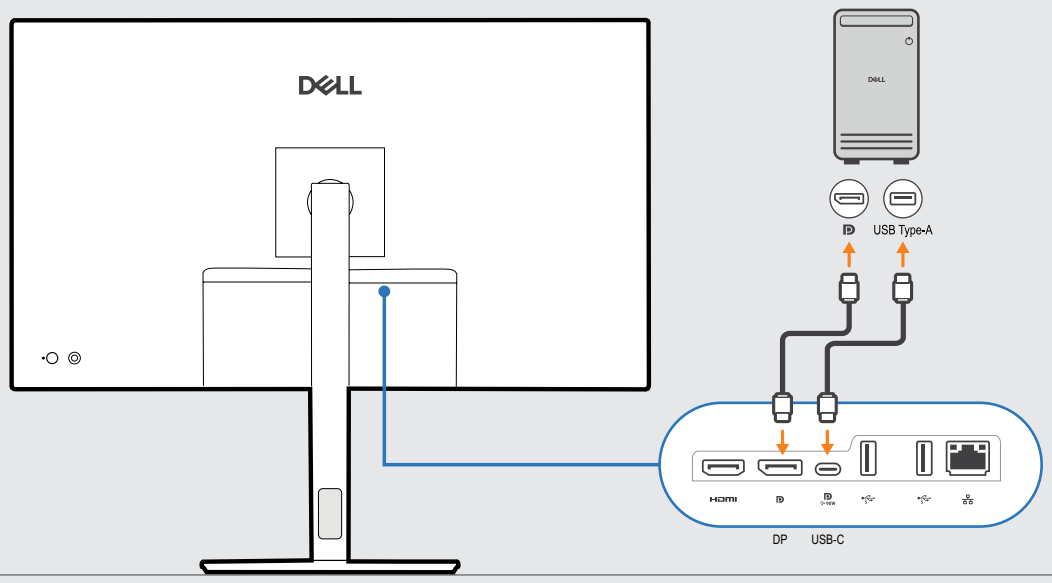
USB Type-A
HDMI
DP
USB-C

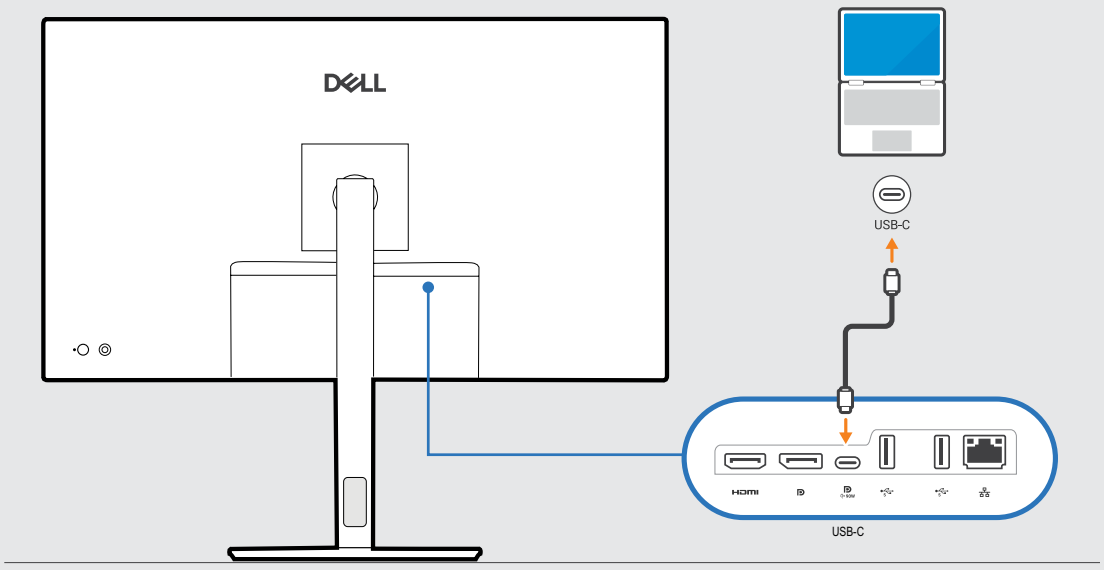
USB-C
USB-C

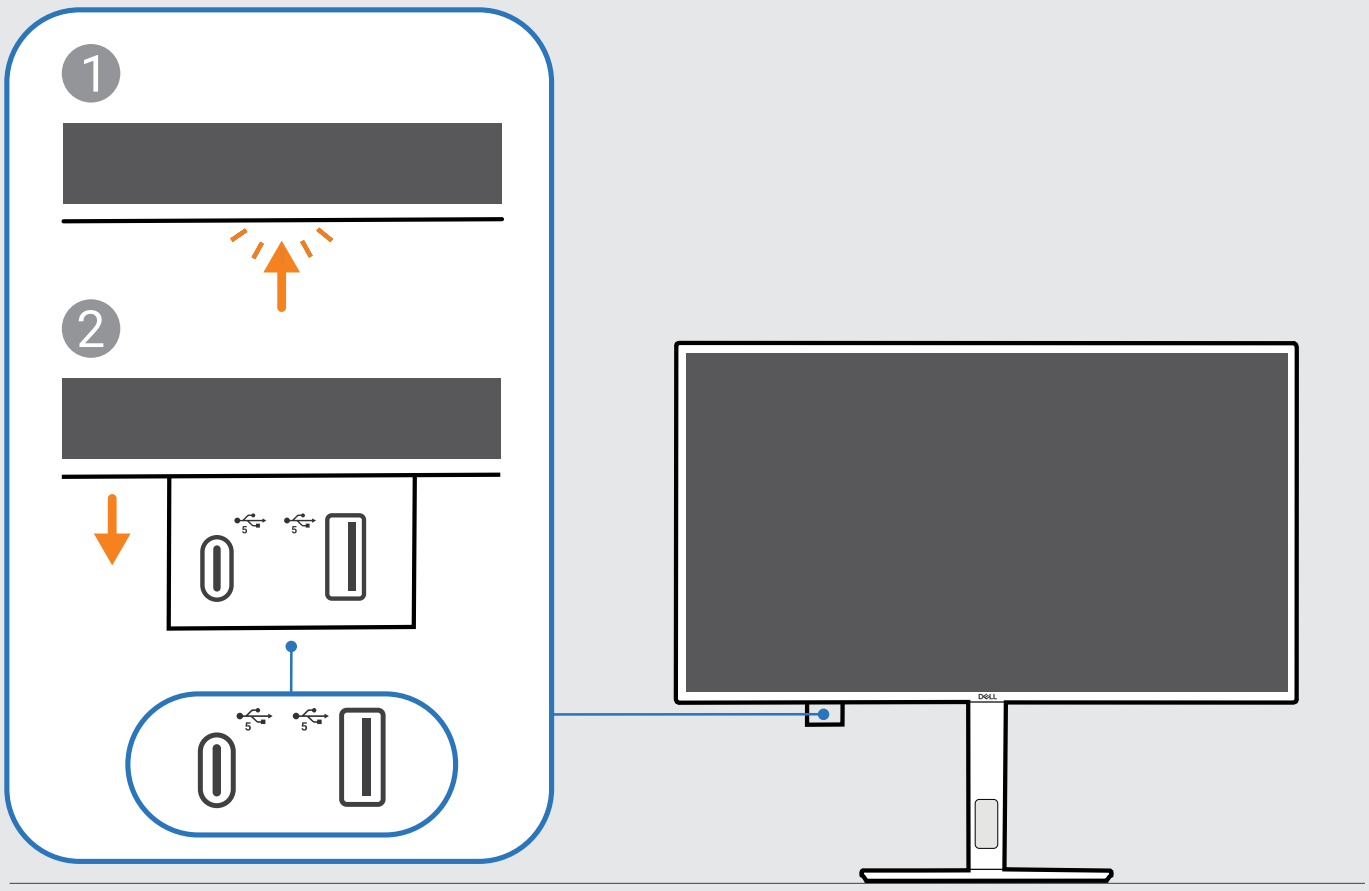
1
2
DELL

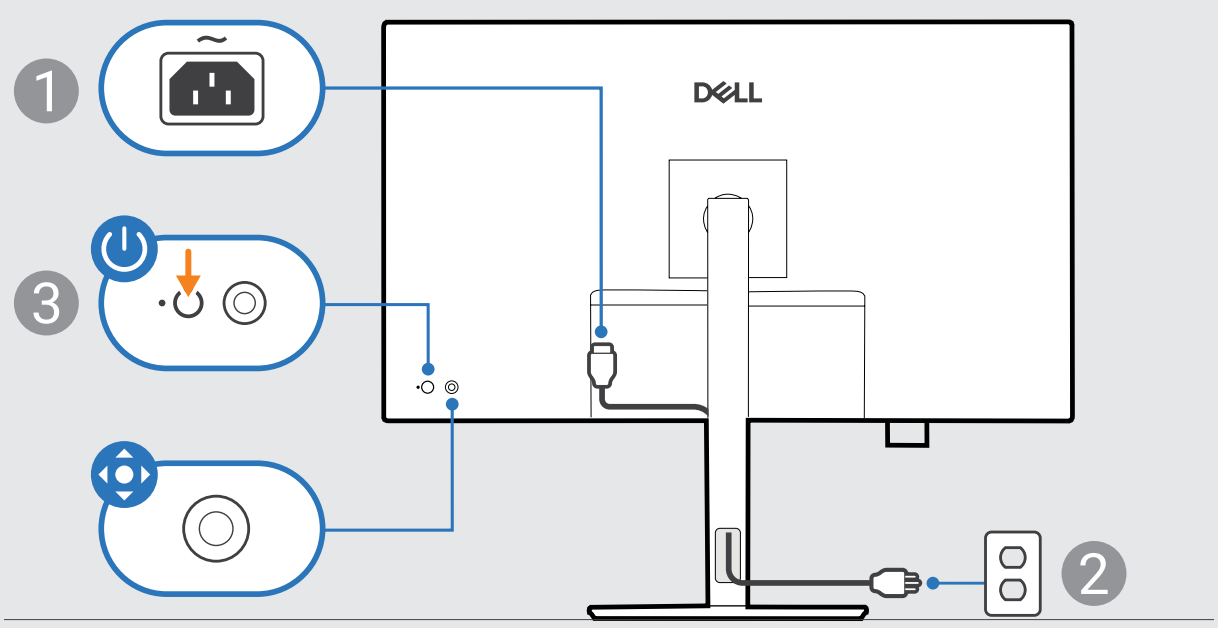
1
3
2
DELL

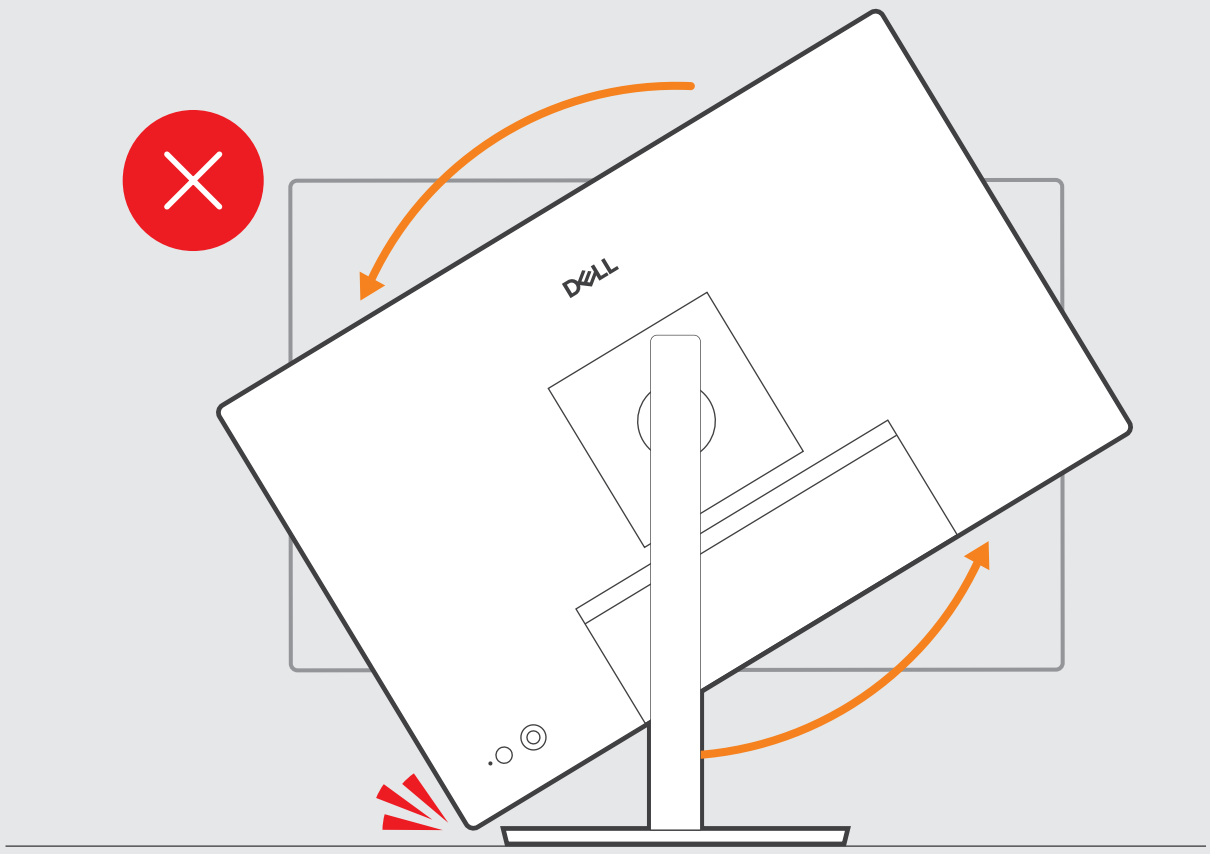

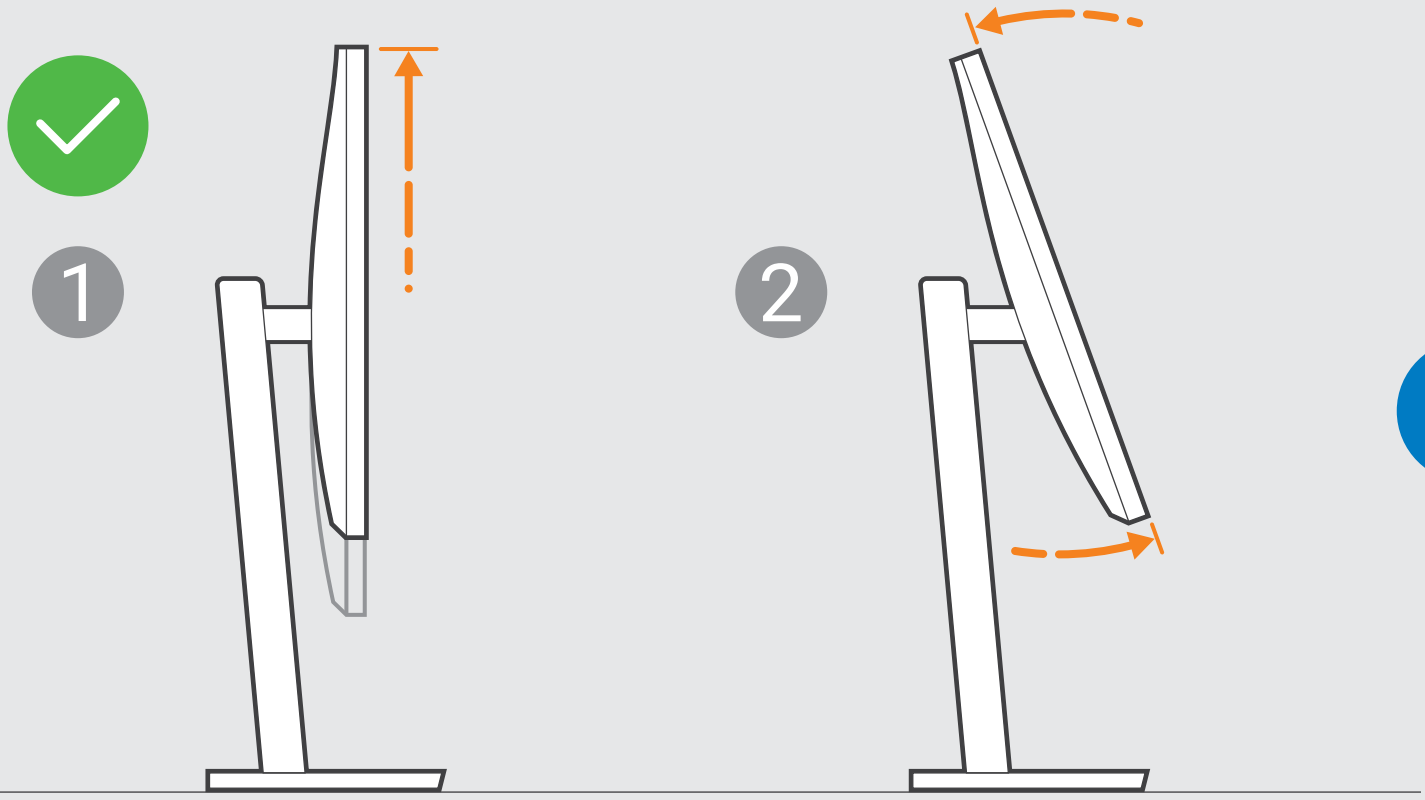
1
2

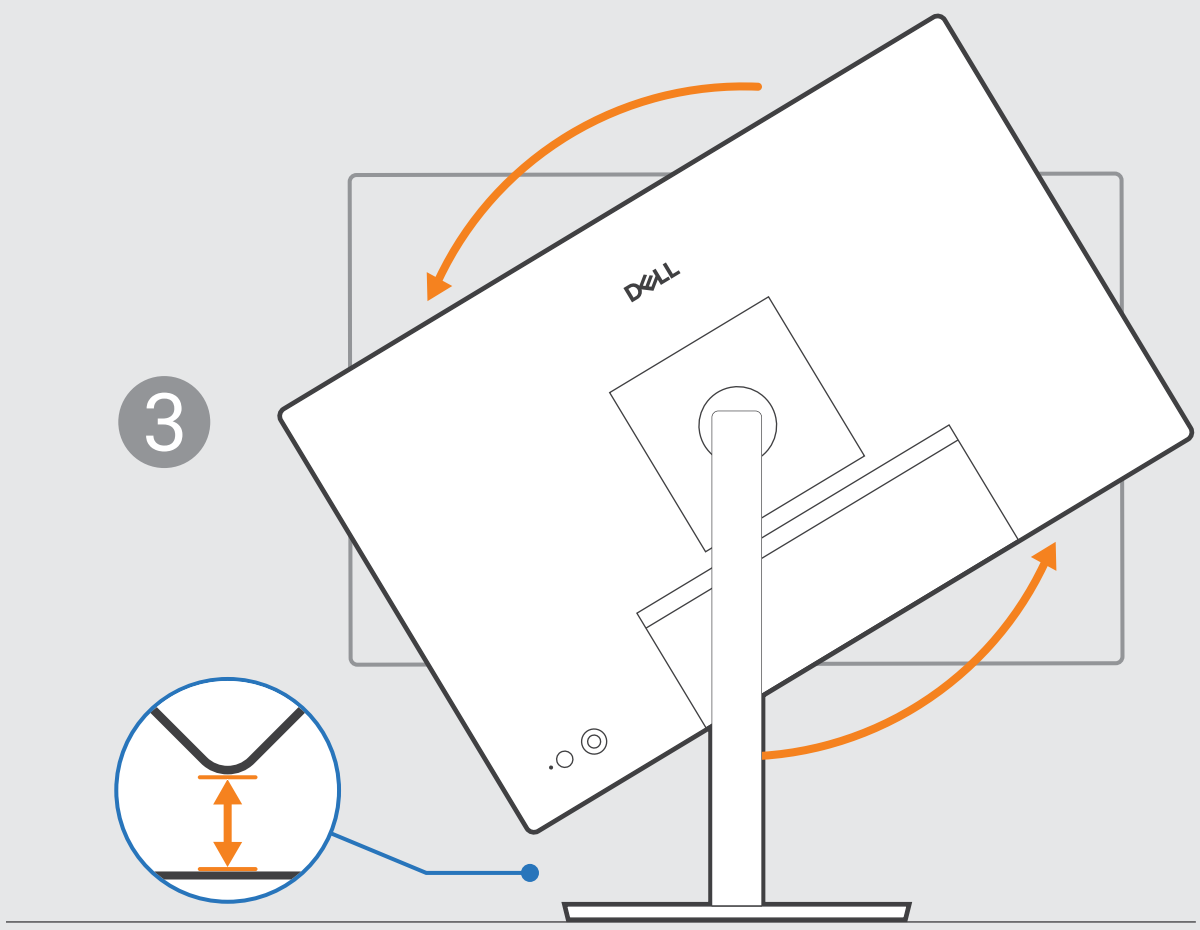
3

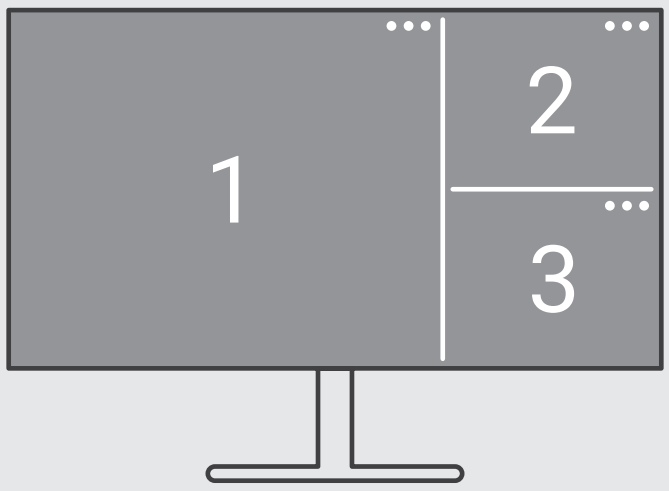

Dell Display and Peripheral Manager
Dell.com/support/ddpm

Dell.com/support/P3225QE