FORGE K200 WIRELESS KEYBOARD

QUICK START GUIDE

FR FEUILLE BAC DE TRI

Model: MS-8ZA4

English

Introductions to Function Keys

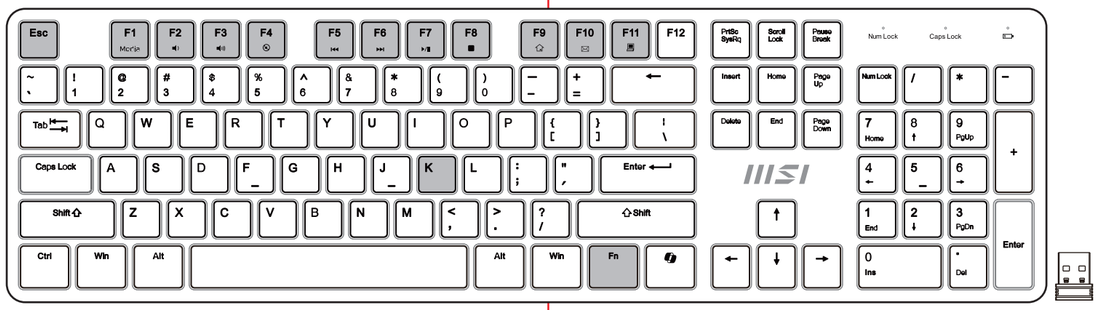

Media Functions

- Fn + F1: Media Player
- Fn + F2: Volume Down
- Fn + F3: Volume Up
- Fn + F4: Mute
- Fn + F5: Previous Track
- Fn + F6: Next Track
- Fn + F7: Play/Pause
- Fn + F8: Stop
- Fn + F9: Default Browser / Homepage
- Fn + F10: Default E-mail App
- Fn + F11: My Computer

※ For more information, please visit MSI official website.

Overview

- Sleep Mode: Activates when no action after 5 minutes; wake up by pressing any key
- Battery Low Indicator: Flashes continuously to replace batteries

To re-pair the connection

- Connect the Wireless USB Dongle to a USB port
- Turn on the keyboard by inserting batteries
- Press and hold ESC + K near the dongle within 15 seconds and repeat until paired

  Paired: Battery low indicator flashes for 8 seconds, then off

  Not paired: Battery low indicator glows for 5 seconds

※ This wireless keyboard uses AAA batteries.

※ Rated Voltage / Current: 3.0V ⎓ 2mA; Maximum Operating Temperature: 40 °C

繁體中文

功能鍵介紹

媒體功能

- Fn + F1: 媒體播放器
- Fn + F2: 音量減小
- Fn + F3: 音量增加
- Fn + F4: 靜音
- Fn + F5: 上一曲
- Fn + F6: 下一曲
- Fn + F7: 播放/暫停
- Fn + F8: 停止
- Fn + F9: 預設瀏覽器 / 首頁
- Fn + F10: 預設電子郵件應用程式
- Fn + F11: 我的電腦

概述

- 睡眠模式：在5分鐘無操作後啟動；按任意鍵可喚醒
- 電池低電量指示燈：持續閃爍表示需更換電池

重新配對連接

- 將無線 USB 接收器連接到USB端口
- 放入電池啟用鍵盤
- 15 秒內，於接收器附近按住 ESC + K 15 秒，重複直到配對成功

  - 已配對：電池低電量指示燈閃爍 8 秒後熄滅

  - 未配對：電池低電量指示燈亮起 5 秒

※ 此無線鍵盤使用 AAA 電池

※ 額定電壓 / 電流：3.0V ⎓ 2mA; 最高作業溫度：40 °C

※ 如欲獲得更多產品訊息，請至 MSI 官方網站。

FCC Compliance Statement

This device complies with Part 15 of the FCC Rules. Operation is subject to the following two conditions:
(1) this device may not cause harmful interference, and (2) this device must accept any interference received, including interference that may cause undesired operation.
This equipment has been tested and found to comply with the limits for a Class B digital device, pursuant to Part 15 of the FCC Rules. These limits are designed to provide reasonable protection against harmful interference in a residential installation.
This equipment generates, uses and can radiate radio frequency energy and, if not installed and used in accordance with the instructions, may cause harmful interference to radio communications. However, there is no guarantee that interference will not occur in a particular installation.
If this equipment does cause harmful interference to radio or television reception, which can be determined by turning the equipment off and on, the user is encouraged to try to correct the interference by one or more of the following measures:
-- Reorient or relocate the receiving antenna.
-- Increase the separation between the equipment and receiver.
-- Connect the equipment into an outlet on a circuit different from that to which the receiver is connected.
-- Consult the dealer or an experienced radio/TV technician for help.
Any changes or modification not expressly approved by the party responsible for compliance could void the user's authority to operate the device. Where shielded interface cables have been provided with the product or specified additional components or accessories elsewhere defined to be used with the installation of the product, they must be used in order to ensure compliance with FCC regulations.

CE宣告：Hereby, MSI declares that the radio equipment type MS-8ZA4 is in compliance with Directive 2014/53/EU. The full text of the EU declaration of conformity is available at the following internet address: www.msi.com

ISED Compliance Statement

This device contains licence-exempt transmitter(s)/receiver(s) that comply with Innovation, Science and Economic Development Canada's licence-exempt RSS(s). Operation is subject to the following two conditions: (1)This device may not cause interference.(2)This device must accept any interference, including interference that may cause undesired operation of the device.

L'émetteur/récepteur exempt de licence contenu dans le présent appareil est conforme aux CNR 'Innovation, Sciences et Développement économique Canada applicables aux appareils radio exempts de licence. L'exploitation est autorisée aux deux conditions suivantes :(1)L'appareil ne doit pas produire de brouillage; (2)L'appareil doit accepter tout brouillage radioélectrique subi, même si le brouillage est susceptible d'en compromettre le fonctionnement.

CAN ICES(B)/NBM(B)

This Class B digital apparatus complies with Canadian ICES-003.
Cet appareil numérique de la claseee B est conforme a la norme ICES-003 du Canada.

Caution

1. Replacement of battery with an incorrect type that can defeat a safeguard (for example, in the case of some lithium battery types);
2. Disposal of a battery into fire or a hot oven, or mechanically crushing or cutting of a battery, that can result in an explosion;
3. Leaving a battery in an extremely high temperature surrounding environment that can result in an explosion or the leakage of flammable liquid or gas;
4. A battery subjected to extremely low air pressure that may result in an explosion or the leakage of flammable liquid or gas.
5. High or low extreme temperatures that a BATTERY can be subjected to during use, storage or transportation; and
6. Low air pressure at high altitude.

Mise en garde

1.Remplacement de la batterie par un type incorrect pouvant contourner une protection (par exemple, dans le cas de certains types de batteries au lithium) ;
2.Élimination d'une batterie par incinération ou dans un four chaud, ou écrasement ou découpe mécanique d'une batterie, pouvant entraîner une explosion ;
3.Laisser une batterie dans un environnement à température extrêmement élevée, pouvant entraîner une explosion ou la fuite de liquide ou de gaz inflammable ;
4.Exposer une batterie à une pression atmosphérique extrêmement basse, pouvant entraîner une explosion ou la fuite de liquide ou de gaz inflammable.
5.Les températures extrêmes élevées ou basses auxquelles une BATTERIE peut être soumise pendant son utilisation, son stockage ou son transport ;
6.low air pressure at high altitude.

BSMI Statement

1. 置換可能影響安全防護的錯誤形式的電池(例: 在某些鋰電池類型的情形下);
2. 電池丟入火焰或烤箱中, 或將電池作可能導致爆炸的機械擠壓或切割;
3. 電池至於可能導致爆炸或可燃性異體或氣體洩漏的高溫環境中; 且
4. 電池承受可能導致爆炸或可燃性異體或氣體洩漏的極度低氣壓。

NCC警語

取得審驗證明之低功率射頻器材，非經核准，公司、商號或使用者均不得擅自變更頻率、加大功率或變更原設計之特性及功能。低功率射頻器材之使用不得影響飛航安全及干擾合法通信；經發現有干擾現象時，應立即停用，並改善至無干擾時方得繼續使用。前述合法通信，指依電信管理法規定作業之無線電通信。低功率射頻器材須忍受合法通信或工業、科學及醫療用電波輻射性電機設備之干擾。

	Wireless Keyboard	2.4GHz Dongle
FCC	I4L-MS-8ZA4	I4L-WD01
NCC	CCAH24LP6870T5	CCAH24LP7180T1
IC	3715A-MS-8ZA4	3715A-I4L-WD01

Specifications
Keyboard Input / 輸入：DC 3V / 2mA
Transceiver Input / 輸入：DC 5V / 30mA
Frequency Range： 2.40385 – 2.47985 GHz
Keyboard output power < 0 dBm
Transceiver outpower < 0 dBm

상호 : (주) 엠에스아이코리아
제품명 : 특정소출력 무선기기
(무선데이터통신시스템용 무선기기)
모델명 : MS-8ZA4
제조년월 : 2024년
제조자 및 제조국가 : MSI/중국
R-R-MSI-MS-8ZA4

상호 : (주) 엠에스아이코리아
제품명 : USB Wireless Dongle
모델명 : WD01
제조년월 : 2024 년
제조자 및 제조국가 : MSI/중국
R-R-MSI-WD01

設備名稱 Equipment name：無線鍵盤
型號 (型式) Type designation (Type)：MS-8ZA4

單元 Unit	限用物質及其化學符號 Restricted substances and its chemical symbols					
	鉛Lead (Pb)	汞Mercury (Hg)	鎘 Cadmium (Cd)	六價鉻 Hexavalent chromium (Cr^{+6})	多溴聯苯 Polybrominated biphenyls (PBB)	多溴二苯醚 Polybrominated diphenyl ethers (PBDE)
印刷電路板	O	O	O	O	O	O
上/中/下蓋	O	O	O	O	O	O
按鍵	O	O	O	O	O	O
導光柱	O	O	O	O	O	O
USB 連接線	O	O	O	O	O	O
螺絲	O	O	O	O	O	O
腳墊	O	O	O	O	O	O
外箱貼紙	O	O	O	O	O	O

備考 1. "超出 0.1 wt %" 及 "超出 0.01 wt %" 係指限用物質之百分比含量超出百分比含量基準值。
Note 1: "Exceeding 0.1 wt%" and " exceeding 0.01 wt%" indicates that the percentage content of the restricted substance exceeds the reference percentage value of presence condition.
備考 2. "O"係指該項限用物質之百分比含量未超出百分比含量基準值。
Note 2: "O" indicates that the percentage content of the restricted substance does not exceed the percentage of reference value of presence.
備考 3. "- " 係指該項限用物質為排除項目。
Note 3 : "The "-" indicates that the restricted substance corresponds to the exemption.

产品中有毒有害物质或元素的名称及含量

部件名称	有害物质					
	铅 (Pb)	汞 (Hg)	镉 (Cd)	六价铬 (Cr(VI))	多溴联苯 (PBB)	多溴二苯醚 (PBDE)
印刷电路板组件*	O	O	O	O	O	O
外壳及附件	O	O	O	O	O	O

O：表示该有毒有害物质在该部件所有均质材料中的含量均在 SJ/T11363 2006 标准 规定的限量要求以下。
×：表示该有毒有害物质至少在该部件的某一均质材料中的含量超出 SJ/T11363 2006 标准规定的限量要求。
* 印刷电路板组件: 包括印刷电路板及其零部件、电子元器件等。
表中标有" X" 的所有部件都符合欧盟 ROHS 法规。

10 在中华人民共和国境内销售的电子信息产品必须标示此标志，标志内的数字表示在正常的使用状态下的产品环保使用年限。

FORGE M200 WIRELESS MOUSE

QUICK START GUIDE

FR FEUILLE BAC DE TRI

Model: MS-8ZB4

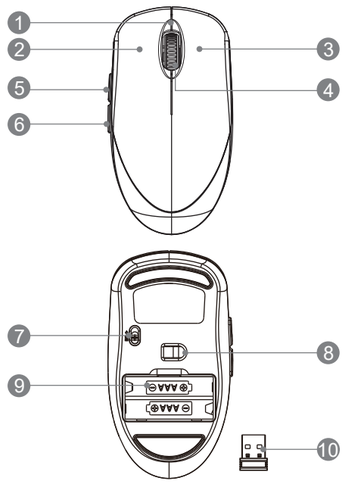

English

Introductions

Overview

1. Indicator LED
2. Left Button
3. Right Button
4. Scroll Wheel
5. Side Button 1 (Default Setting: Next Page)
6. Side Button 2 (Default Setting: Previous Page)
7. Switch On/Off
8. Optical Sensor
9. Battery Compartment (AAA Battery)
10. Wireless USB Dongle

3 DPI Level Presets

• Level 1: 1000 DPI • Level 2: 1200 DPI (Default) • Level 3: 1600 DPI

Functions

- To adjust DPI: Press and hold Left Button + Scroll Wheel + Right Button for 5 seconds
  - Indicator LED flashes once: 1000 DPI
  - Indicator LED flashes twice: 1200 DPI
  - Indicator LED flashes three times: 1600 DPI
- Sleep Mode: Activates if the mouse is idle for 8 minutes and Optical Sensor shuts off to conserve battery life; wake up by pressing any button
- When Battery Low: Indicator LED flashes slowly

Re-pairing the connection

- Connect the Wireless USB Dongle to a USB port on your PC
- Turn on the mouse with the switch at the bottom
- Press and hold Right Button + Scroll Wheel for 15 seconds while holding the mouse close to the Wireless USB dongle. Repeat this process if necessary
  - Paired: Indicator LED flashes for 8 seconds, then turns off
  - Not paired: Indicator LED glows for 5 seconds

This mouse is recommended for use with a fabric mouse pad.

※ Rated Voltage / Current: 3.0V ⎓ 6mA; Maximum Operating Temperature: 40 °C

※ For more information, please visit MSI official website.

繁體中文

功能介紹

外觀檢視

1. 指示燈
2. 左鍵
3. 右鍵
4. 滾輪
5. 側鍵 1（預設：下一頁）
6. 側鍵 2（預設：上一頁）
7. 電源開關
8. 光學感應器
9. 電池槽（AAA 電池）
10. 無線 USB 接收器

3 段 DPI 設定

• 1 段: 1000 DPI • 2 段: 1200 DPI (預設) • 3 段: 1600 DPI

概述

- 調整 DPI：按住左按鈕 + 滾輪 + 右按鈕 5 秒
  - 指示燈閃爍一次：1000 DPI
  - 指示燈閃爍兩次：1200 DPI
  - 指示燈閃爍三次：1600 DPI
- 睡眠模式：當滑鼠閒置8 分後啟動，為保留電量，光學感測器關閉；按任意按鈕則可喚醒
- 電池低電量時：指示燈慢慢閃爍

重新配對連接

- 將無線 USB 接收器連接至 PC上的 USB 端口
- 開啟滑鼠底部的電源開關
- 按住右按鈕 + 滾輪約15秒內，並將滑鼠靠近無線 USB 接收器，如必要，重複此動作直到配對成功
  - 已配對：指示燈閃爍 8 秒後熄滅
  - 未配對：指示燈常亮 5 秒

此款滑鼠建議搭配布質滑鼠墊使用

※ 額定電壓 / 電流：3.0V ⎓ 6mA; 最高作業溫度：40 °C

※ 如欲獲得更多產品訊息，請至 MSI 官方網站。

限用物質含有情況標示聲明書 RoHS Statements

設備名稱：無線滑鼠　　型號（型式）：MS-8ZB4						
單元	限用物質及其化學符號					
	鉛 (Pb)	汞 (Hg)	鎘 (Cd)	六價鉻 (Cr^{+6})	多溴聯苯 (PBB)	多溴二苯醚 (PBDE)
印刷電路及電子組件	—	O	O	O	O	O
外殼	O	O	O	O	O	O
連接線	O	O	O	O	O	O
滾輪裝置	O	O	O	O	O	O

備考 1. 〝O〞係指該項限用物質之百分比含量未超出百分比含量基準值。

備考 2. 〝—〞係指該項限用物質為排除項目。

产品中有毒有害物质或元素的名称及含量

部件名称	有害物质					
	铅 (Pb)	汞 (Hg)	镉 (Cd)	六价铬 (Cr (VI))	多溴联苯 (PBB)	多溴二苯醚 (PBDE)
印刷电路板组件*	O	O	O	O	O	O
外壳及附件	O	O	O	O	O	O

O：表示该有毒有害物质在该部件所有均质材料中的含量均在 SJ/T11363 2006 标准规定的限量要求以下。

×：表示该有毒有害物质至少在该部件的某一均质材料中的含量超出 SJ/T11363 2006 标准规定的限量要求。

* 印刷电路板组件: 包括印刷电路板及其零部件、电子元器件等。

表中标有〝X〞的所有部件都符合欧盟 ROHS 法规。

10 在中华人民共和国境内销售的电子信息产品必须标示此标志，标志内的数字表示在正常的使用状态下的产品环保使用年限。

FR Cet appareil, ses accessoires et piles se recyclent　À DÉPOSER EN MAGASIN　ou　À DÉPOSER EN DÉCHETERIE

Points de collecte sur www.quefairedemesdechets.fr
Privilégiez la réparation ou le don de votre appareil !

FCC Compliance Statement

This device complies with Part 15 of the FCC Rules. Operation is subject to the following two conditions: (1) this device may not cause harmful interference, and (2) this device must accept any interference received, including interference that may cause undesired operation.

This equipment has been tested and found to comply with the limits for a Class B digital device, pursuant to Part 15 of the FCC Rules. These limits are designed to provide reasonable protection against harmful interference in a residential installation.

This equipment generates, uses and can radiate radio frequency energy and, if not installed and used in accordance with the instructions, may cause harmful interference to radio communications. However, there is no guarantee that interference will not occur in a particular installation.

If this equipment does cause harmful interference to radio or television reception, which can be determined by turning the equipment off and on, the user is encouraged to try to correct the interference by one or more of the following measures:

-- Reorient or relocate the receiving antenna.
-- Increase the separation between the equipment and receiver.
-- Connect the equipment into an outlet on a circuit different from that to which the receiver is connected.
-- Consult the dealer or an experienced radio/TV technician for help.

Any changes or modification not expressly approved by the party responsible for compliance could void the user's authority to operate the device. Where shielded interface cables have been provided with the product or specified additional components or accessories elsewhere defined to be used with the installation of the product, they must be used in order to ensure compliance with FCC regulations.

CE宣告：Hereby, MSI declares that the radio equipment type MS-8ZB4 is in compliance with Directive 2014/53/EU. The full text of the EU declaration of conformity is availableat the following internet address: www.msi.com

BSMI Statement

1. Replacement of battery with an incorrect type that can defeat a safeguard (for example, in the case of some lithium battery types);
2. Disposal of a battery into fire or a hot oven, or mechanically crushing or cutting of a battery, that can result in an explosion;
3. Leaving a battery in an extremely high temperature surrounding environment that can result in an explosion or the leakage of flammable liquid or gas;
4. A battery subjected to extremely low air pressure that may result in an explosion or the leakage of flammable liquid or gas.

1. 置換可能影響安全防護的錯誤形式的電池(例: 在某些鋰電池類型的情形下);
2. 電池丟入火焰或烤箱中, 或將電池作可能導致爆炸的機械擠壓或切割;
3. 電池至於可能導致爆炸或可燃性異體或氣體洩漏的高溫環境中;
4. 且
4. 電池承受可能導致爆炸或可燃性異體或氣體洩漏的極度低氣壓。

ISED Compliance Statement

This device contains licence-exempt transmitter(s)/receiver(s) that comply with Innovation, Science and Economic Development Canada's licence-exempt RSS(s). Operation is subject to the following two conditions: (1)This device may not cause interference.(2)This device must accept any interference, including interference that may cause undesired operation of the device.

L'émetteur/récepteur exempt de licence contenu dans le présent appareil est conforme aux CNR d'Innovation, Sciences et Développement économique Canada applicables aux appareils radio exempts de licence. L'exploitation est autorisée aux deux conditions suivantes :(1)L'appareil ne doit pas produire de brouillage; (2)L'appareil doit accepter tout brouillage radioélectrique subi, même si le brouillage est susceptible d'en compromettre le fonctionnement.

CAN ICES-003(B)/NBM-003(B)

This Class B digital apparatus complies with Canadian ICES-003.

Cet appareil numérique de la claseee B est conforme a la norme ICES-003 du Canada.

Caution

1. Replacement of battery with an incorrect type that can defeat a safeguard (for example, in the case of some lithium battery types);
2. Disposal of a battery into fire or a hot oven, or mechanically crushing or cutting of a battery, that can result in an explosion;
3. Leaving a battery in an extremely high temperature surrounding environment that can result in an explosion or the leakage of flammable liquid or gas;
4. A battery subjected to extremely low air pressure that may result in an explosion or the leakage of flammable liquid or gas.
5. High or low extreme temperatures that a BATTERY can be subjected to during use, storage or transportation; and
6. Low air pressure at high altitude.

Mise en garde

1.Remplacement de la batterie par un type incorrect pouvant contourner une protection (par exemple, dans le cas de certains types de batteries au lithium) ;
2.Élimination d'une batterie par incinération ou dans un four chaud, ou écrasement ou découpe mécanique d'une batterie, pouvant entraîner une explosion ;
3.Laisser une batterie dans un environnement à température extrêmement élevée, pouvant entraîner une explosion ou la fuite de liquide ou de gaz inflammable ;
4.Exposer une batterie à une pression atmosphérique extrêmement basse, pouvant entraîner une explosion ou la fuite de liquide ou de gaz inflammable.
5.Les températures extrêmes élevées ou basses auxquelles une BATTERIE peut être soumise pendant son utilisation, son stockage ou son transport ;
6.low air pressure at high altitude.

NCC警語

取得審驗證明之低功率射頻器材，非經核准，公司、商號或使用者均不得擅自變更頻率、加大功率或變更原設計之特性及功能。低功率射頻器材之使用不得影響飛航安全及干擾合法通信；經發現有干擾現象時，應立即停用，並改善至無干擾時方得繼續使用。前述合法通信，指依電信管理法規定作業之無線電通信。低功率射頻器材須忍受合法通信或工業、科學及醫療用電波輻射性電機設備之干擾。

	Wireless Mouse	2.4GHz Dongle
FCC	I4L-MS-8ZB4	I4L-WD01
NCC	CCAH24LP7070T4	CCAH24LP7180T1
IC	3715A-MS8ZB4	3715A-WD01

Specifications

Mouse Input / 輸入：DC 3V / 6 mA
Transceiver Input / 輸入：DC 5V / 30mA
Frequency Range： 2.40385 – 2.47985 GHz
Mouse output power < 0 dBm
Transceiver outpower < 0 dBm

R-R-MSI-MS-8ZB4
상호 : (주) 엠에스아이코리아
제품명 : 특정소출력 무선기기 (무선데이터통신시스템용 무선기기)
모델명 : MS-8ZB4
제조년월 : 2024년
제조자 및 제조국가 : MSI/중국

R-R-MSI-WD01
상호 : (주) 엠에스아이코리아
제품명 : USB Wireless Dongle
모델명 : WD01
제조년월 : 2024년
제조자 및 제조국가 : MSI/중국

Функция пернелеріне шолу

FORGE K200 WIRELESS KEYBOARD · Жылдам бастау нұсқаулығы

Мультимедиа функциялары

- Fn + F1: Медиа ойнатқыш
- Fn + F2: Дыбыс деңгейін төмендету
- Fn + F3: Дыбыс деңгейін арттыру
- Fn + F4: Дыбысты өшіру
- Fn + F5: Алдыңғы жол
- Fn + F6: Келесі жол
- Fn + F7: Ойнату/Кідірту
- Fn + F8: Тоқтату
- Fn + F9: Әдепкі браузер / Басты бет
- Fn + F10: Әдепкі электрондық пошта қолданбасы
- Fn + F11: Менің компьютерім

Шолу

- Ұйқы режимі: 5 минут әрекет болмаса қосылады; кез келген пернені басып оятуға болады
- Батарея заряды аз индикаторы: батареяларды ауыстыру қажет болғанда үздіксіз жыпылықтайды

Қосылымды қайта жұптау

- Сымсыз USB қабылдағышты USB портына қосыңыз
- Батареяларды салып, пернетақтаны қосыңыз
- 15 секунд ішінде қабылдағыштың жанында ESC + K пернелерін басып тұрыңыз, жұптасқанша қайталаңыз
  - Жұптасты: батарея заряды аз индикаторы 8 секунд жыпылықтап, сөнеді
  - Жұптаспады: батарея заряды аз индикаторы 5 секунд жанып тұрады

※ Бұл сымсыз пернетақта AAA батареяларынан қуаттанады.

※ Номиналды кернеу / ток: 3.0V ⎓ 2mA; ең жоғары жұмыс температурасы: 40 °C

※ Қосымша ақпарат алу үшін MSI ресми сайтына кіріңіз.

Модель: MS-8ZA4 (пернетақта), MS-8ZB4 (тінтуір)

Өндіруші: MSI. Қытайда жасалған.

Импорттаушы / Қазақстан Республикасында талаптар қабылдайтын заңды тұлға: «DNS QAZAQSTAN (ДНС КАЗАХСТАН)» ЖШС, Астана қ., Сарыарқа ауданы, Сарыарқа даңғ., 12 ғим., Қазақстан Республикасы. Электрондық пошта мекенжайы: info@dns-shop.kz

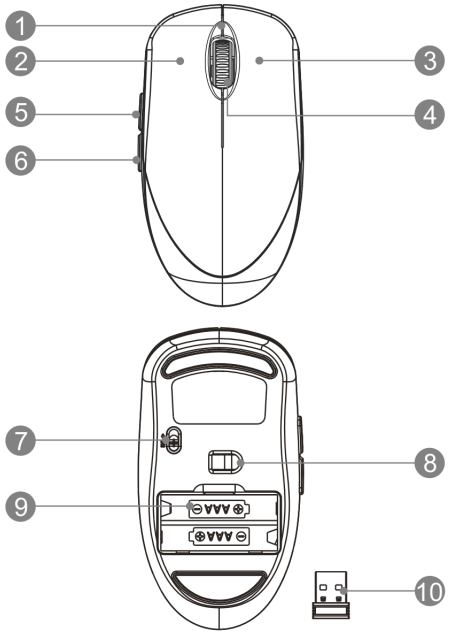

Таныстыру

FORGE M200 WIRELESS MOUSE · Жылдам бастау нұсқаулығы

Шолу

1. Жарық индикаторы
2. Сол жақ батырма
3. Оң жақ батырма
4. Айналдыру дөңгелегі
5. Бүйірлік батырма 1 (әдепкі параметр: келесі бет)
6. Бүйірлік батырма 2 (әдепкі параметр: алдыңғы бет)
7. Қосу/өшіру қосқышы
8. Оптикалық сенсор
9. Батарея бөлімі (AAA батареясы)
10. Сымсыз USB қабылдағыш

DPI-дің 3 деңгейі

• 1-деңгей: 1000 DPI • 2-деңгей: 1200 DPI (әдепкі) • 3-деңгей: 1600 DPI

Функциялар

- DPI реттеу үшін: сол жақ батырманы + айналдыру дөңгелегін + оң жақ батырманы 5 секунд басып тұрыңыз
  - Жарық индикаторы бір рет жыпылықтайды: 1000 DPI
  - Жарық индикаторы екі рет жыпылықтайды: 1200 DPI
  - Жарық индикаторы үш рет жыпылықтайды: 1600 DPI
- Ұйқы режимі: тінтуір 8 минут жұмыссыз тұрса қосылады, батарея зарядын үнемдеу үшін оптикалық сенсор өшеді; кез келген батырманы басып оятуға болады
- Батарея заряды аз болғанда: жарық индикаторы баяу жыпылықтайды

Қосылымды қайта жүптау

- Сымсыз USB қабылдағышты компьютердің USB портына қосыңыз
- Тінтуірді төменгі жағындағы қосқышпен қосыңыз
- Тінтуірді сымсыз USB қабылдағышқа жақындатып, оң жақ батырманы + айналдыру дөңгелегін 15 секунд басып тұрыңыз. Қажет болса, қайталаңыз
  - Жұптасты: жарық индикаторы 8 секунд жыпылықтап, сөнеді
  - Жұптаспады: жарық индикаторы 5 секунд жанып тұрады

Бұл тінтуірді мата тінтуір төсенішімен пайдалану ұсынылады.

※ Номиналды кернеу / тоқ: 3.0V ⎓ 6mA; ең жоғары жұмыс температурасы: 40 °C

※ Қосымша ақпарат алу үшін MSI ресми сайтына кіріңіз.