OUKITEL



WP60

User Manual

www.oukitel.com

Contents

English - 01

German - 11

Русский - 19

Français - 26

日本語 - 34

Italiano - 41

Español - 49

العربية - 57

Suomi - 64

Svenska - 72

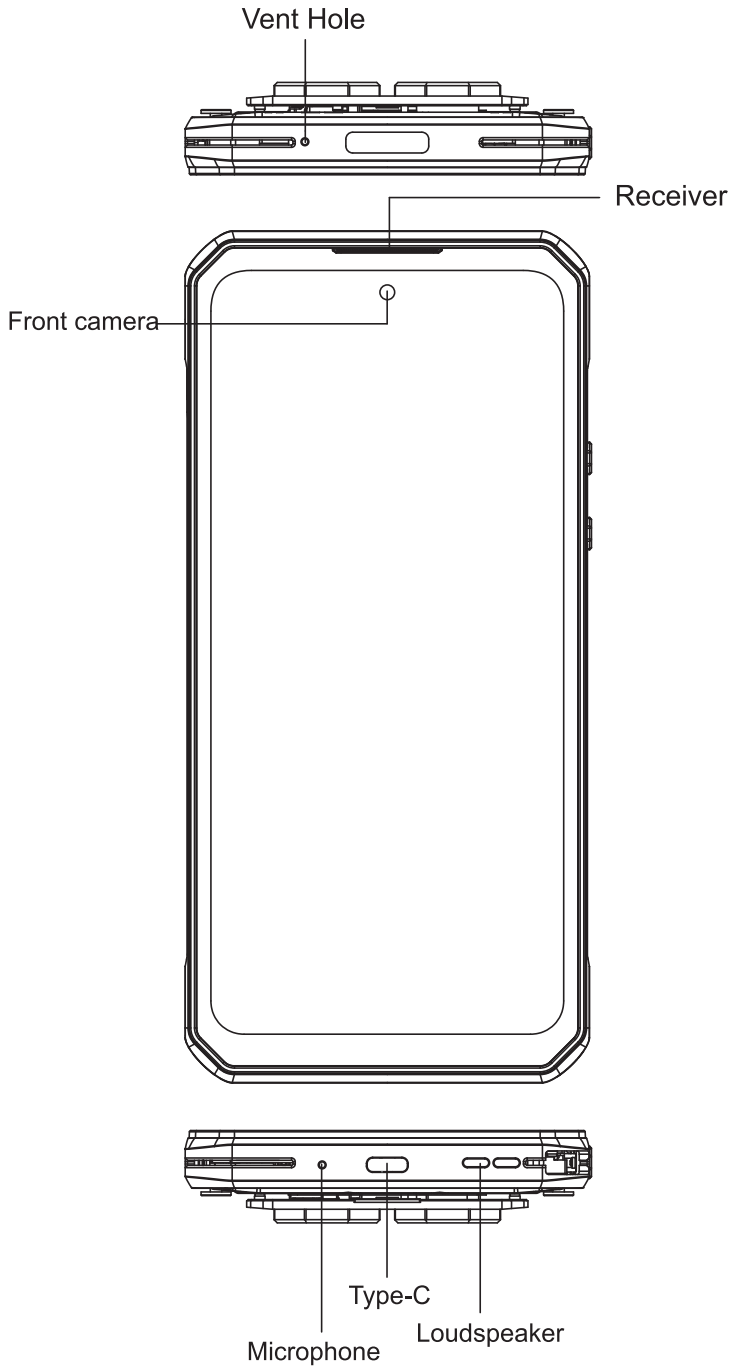
Vent Hole
Receiver
Front camera
Type-C
Loudspeaker
Microphone

Accessories



TYPE-C



Manual



Warranty Card

Battery

WP60 includes an internal battery.You can track your battery status with the icon showed on the top right of the screen.





Fast Charging

Warning

Use only OUKITEL-approved batteries specifically designed for you phone.
Incompatible batteries can cause serious iniuries or damage to your phone.
Never place batteries or phones on or in heating devices such as microwave ovens , stoves , or radiators . Batteries may explode when overheated.

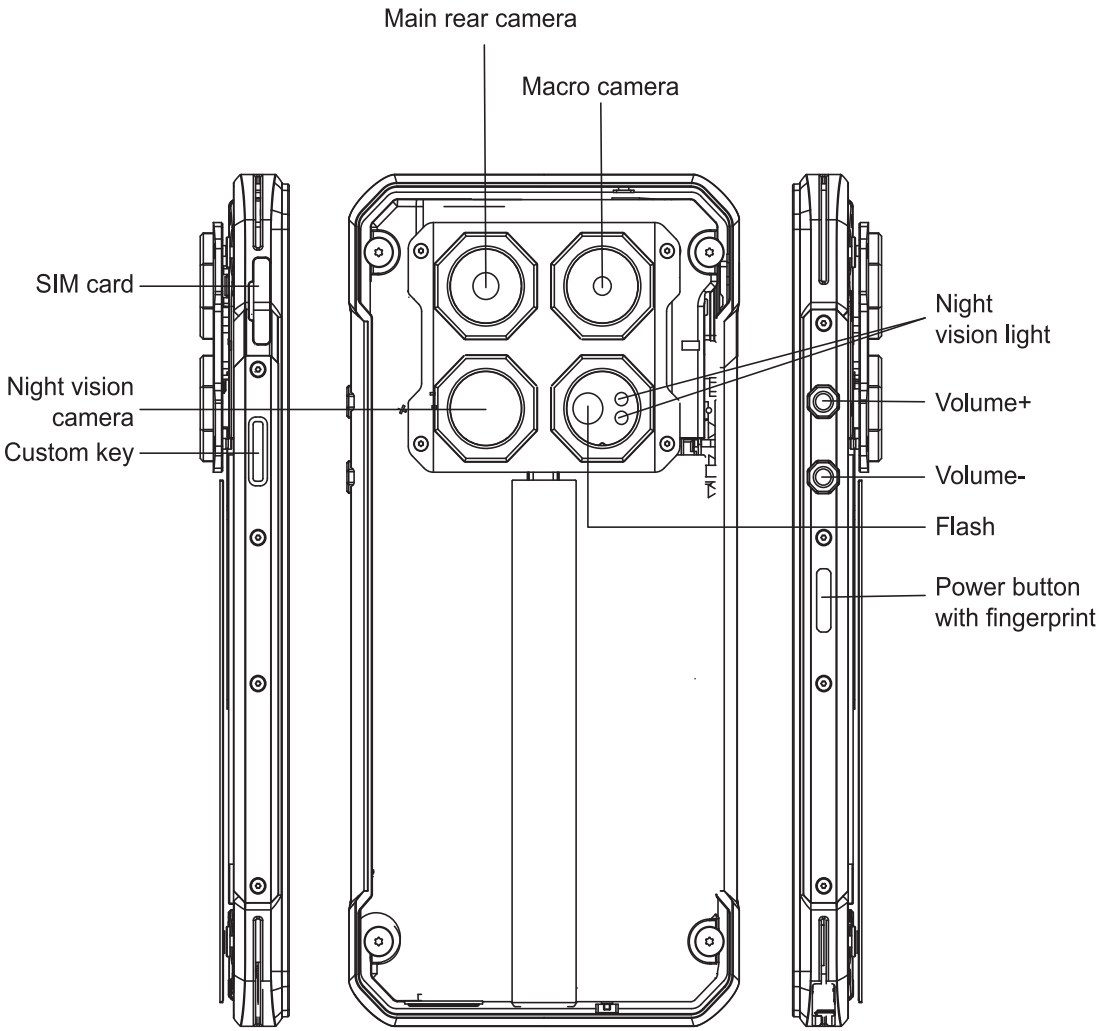
Main rear camera
Macro camera
SIM card
Night vision camera
Custom key
Night vision light
Volume+
Volume-
Flash
Power button with fingerprint

❶How to insert the card

- To make sure your device is able to make calls , insert the SIM card in the following order.
- insert and press the ejector pin into the hole in the side to pop the card tray.

①

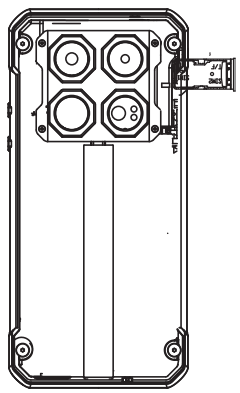

- With the device facing up , insert the cardholder into the device in the direction of the arrow.

②

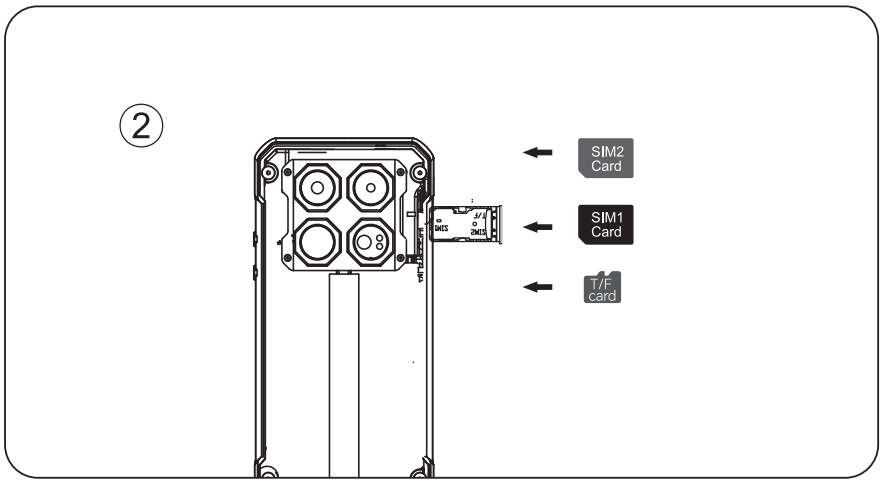

❷ How to boot

Non-removable battery
Press the power button for 3-5 seconds to boot

❸ How to send SMS , MMS

SMS

- Open the SMS app
- Select New Information
- Enter a phone number or browse your contacts
- Select Edit Information and enter your text
- Send ➤

MMs-video

- When writing a text message
- Select images, videos, or other files you want to add even you can take a new picture or video right away
- Selecting or sending ➤

❹ language switching settings

- Main menu-settings system--language and input method Language and input method--language--language adding
- Select the language you need, the system Will automatically
- jump back to the language interface
- Select the icon after the language bar and drag it to the first one

❺ SAR

- The maximum electromagnetic Specific Absorption Rate (SAR) of this product is ≤2.0W/kg
- In line with the requirements of the national standard

EN62209-1:2016; EN 62209-2:2010; EN 62479:2010;
EN 50360:2017; EN 50566:2017;

❻ Safety - In order to ensure safety during use of the product , you must strictly abide by the follow

- The pad should be at least 15cm away from any medical implant or rhythm adjuster and never put the device in your coat pocket.
- Do not expose the device and other batteries together with high temperatures or heat-generating equipment such as sunlight , heaters , microwave ovens , ovens , or water heaters. Overheating of the battery can cause an explosion
- When charging is complete or not charging , disconnect the charger from the device and unplug the charger from the outlet.
- If the device is equipped with a non-removable battery , do not replace the battery by yourself to avoid damaging the battery or the device.
- Use of an unapproved or incompatible power source, charger, or battery may cause fire, explosion, or other hazards.
- Do not disassemble or reset the battery, insert other objects, immerse in water or other liquids to avoid battery leakage, overheating, fire or explosion.
- Do not drop, crush, scratch, or puncture the battery to avoid subjecting the battery to excessive external pressure, Which may result in internal short-circuit and overheating of the battery.
- The company does not bear responsibility for accidents caused by non-standard related charging equipment.

If you want to read the full CE compliance, please check this Link: http://www. oukitel.com

❼Maintenance

- Thoroughly understand the maintenance of this device to use the device more safely and effectively, and extend the service life of the device as much as possible.
- Please follow the instructions in the manual to open the device, disassemble the accessories, and do not try other
- Please avoid dropping, knocking, or shaking your device. Rough handling of the device can cause the screen to rupture, damaging the internal circuit board and the delicate structure.
- Do not use chemical solvents or detergents to clean your device. Wipe the device case with a soft cotton cloth dampened with water and mild soap.
- Clean the lens with a clean, dry, soft cloth. (Example camera lens) and display.
- When the charger is not in use, please unplug it from the power outlet. Do not connect the battery that has been fully charged to the charger for a long time, as overcharging will shorten the battery life.