kyoceradocumentsolutions.com

Setup Guide

ECOSYS PA4000wx ECOSYS PA4000x
ECOSYS PA3500wx ECOSYS PA3500x

2024.11
3VC1F5605201



- Printer Driver & Utility Install
- Manual Download

Refer to the following URL.
https://kyocera.info/

Please scan the code on the right.

Or please check the following URL.
https://kyocera.inst-guide.com/te11f/

EN

Installation Environment

Kyocera Recommends selecting the Location for the machine as follows:

1 Room Temperature range:
50 to 90.5 °F (10 to 32.5 °C)
2 Humidity Level: 10 to 80%
3 Power: A dedicated 220-240VAC 60Hz 4.1 A outlet

Avoid the following locations when selecting a site for the machine.
Adverse environmental conditions may affect the image quality.

+ Avoid locations near a window or with exposure to direct sunlight.
+ Avoid locations with vibrations.
+ Avoid locations with rapid temperature fluctuations.
+ Avoid locations with direct exposure to hot or cold air.
+ Avoid poorly ventilated locations.

Recommended Installation Space

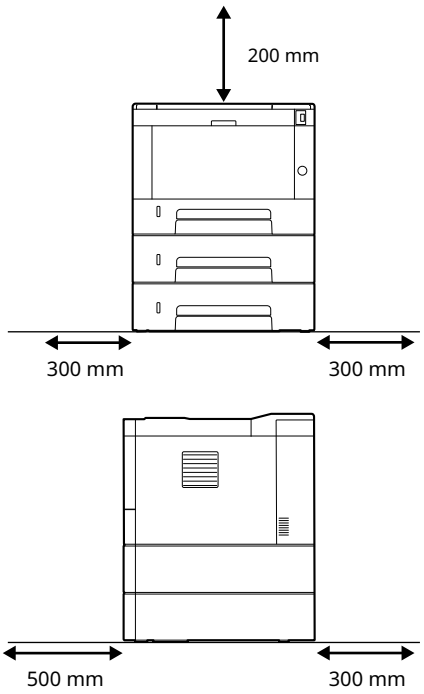

Step 1 Setting up the Machine

1 Open the Box. Remove the machine carefully from the box grasping both sides.

2 Lift the machine.

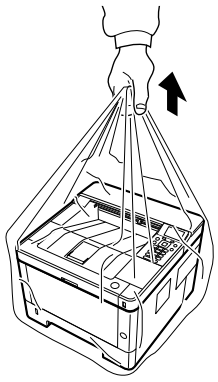

3 Check the bundled items.

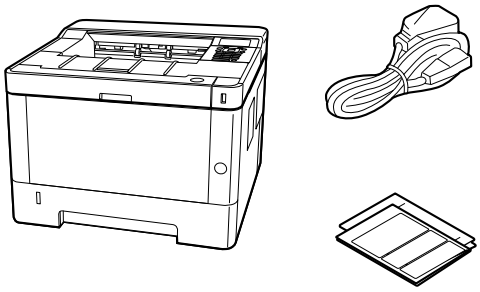

4 Remove all fixing tapes.

5 Setup toner container.

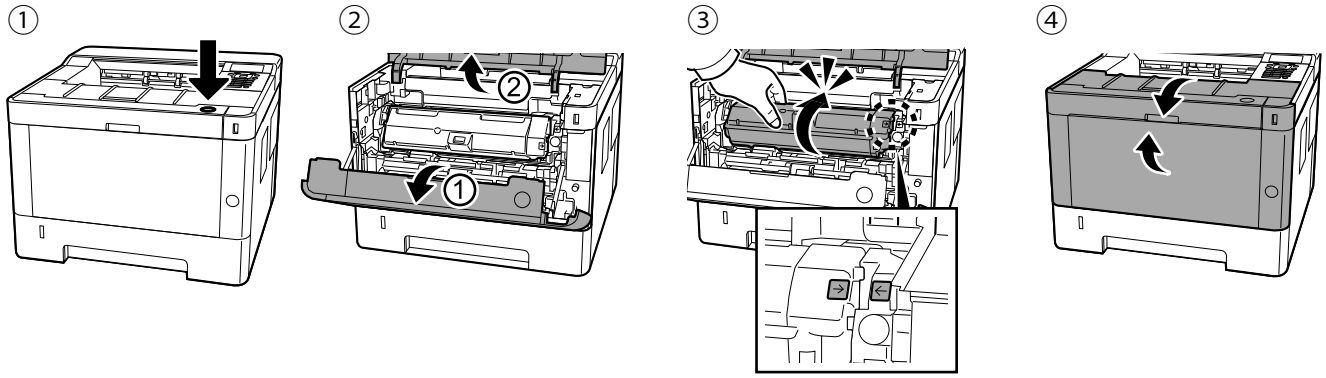

Step 2 Loading Paper

1 Pull the cassette completely out of the machine.

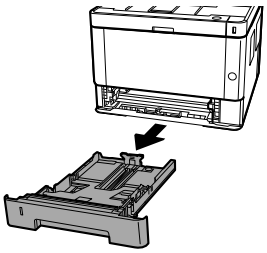

2 Adjust the paper length and width guide to the paper size required.

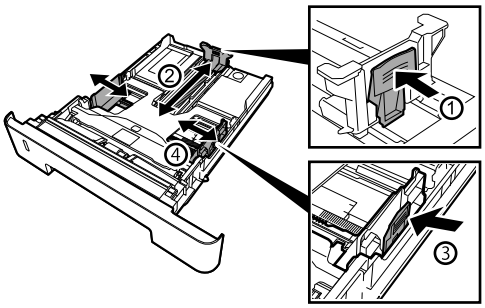

+ If the paper is loaded without adjusting the paper length guide and the paper width guides, skewed paper feeding, and a paper jam will occur.

3 Fan the paper, then tap it on a level surface.

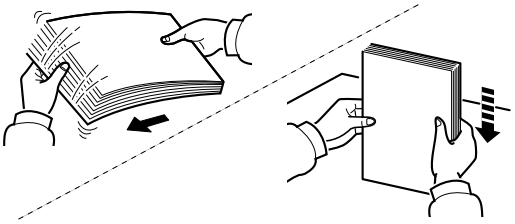

4 Load paper.

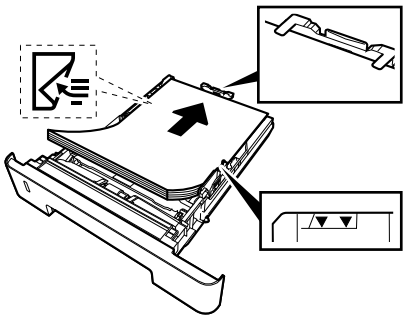

+ Set print side face-down.
+ Before loading the paper, be sure that it is not curled or folded. Paper that is curled or folded may cause paper jams.
+ Ensure that the loaded paper does not exceed the level indicator (see illustration above).

5 Gently push the cassette back in.

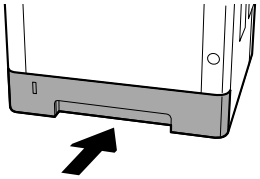

Step 3 Powering on the Machine

1 Connect the power cord to the rear of the machine and the other end to the power outlet.

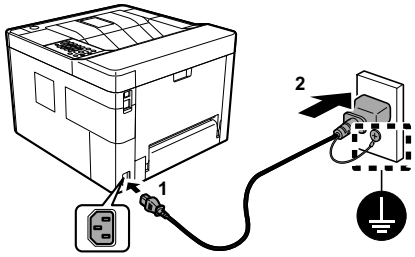

2 Connect network cables as needed.

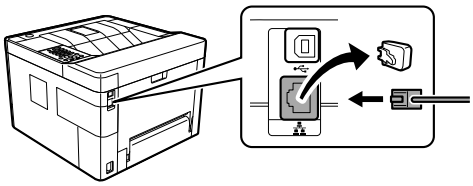

3 Turn the power switch ON at the front of the machine.

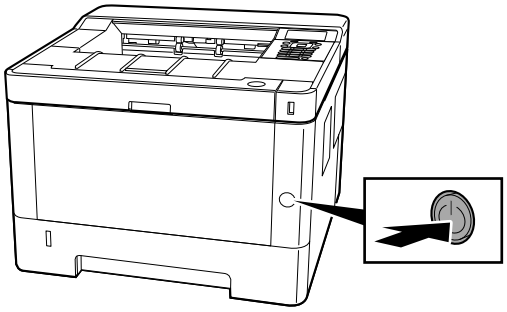

Step 4 Default Settings of the Machine

1 Select [**No (home)**] > [**OK**] key when you use the machine without login as the administrator at home.

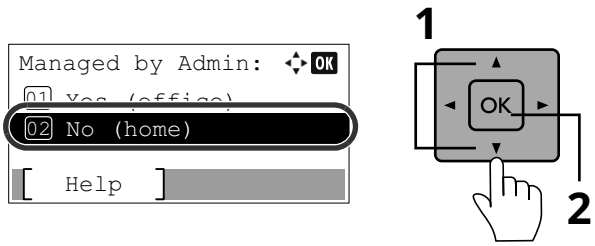

2 Select [**Yes**].

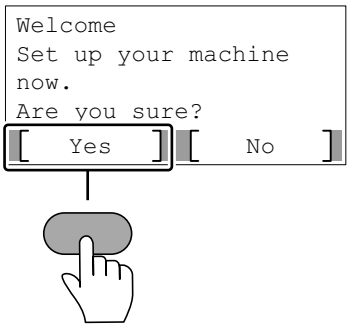

The setup screen appears.

3 The settings can be configured in a wizard-style screen.

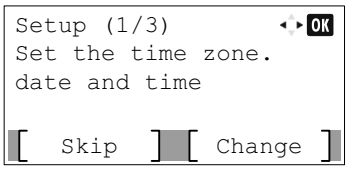

Follow the instructions on the screen.

NOTE
To set the current item, select [**Change**].
To advances to the next item without setting the current item, select [**Skip**].

4 When the following screen appears, select [**Finish**].

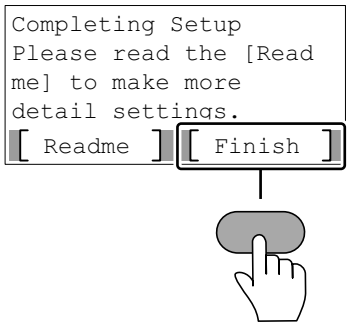

\+ It takes about 10 minutes from the time the power is turned on until the unit is ready for use.

Step 5 Printing a Status Page

1 [**Menu**] key > [▲] [▼] key > [**Report**] > [**OK**] key > [▲] [▼] key > [**Report Print**] > [**OK**] key

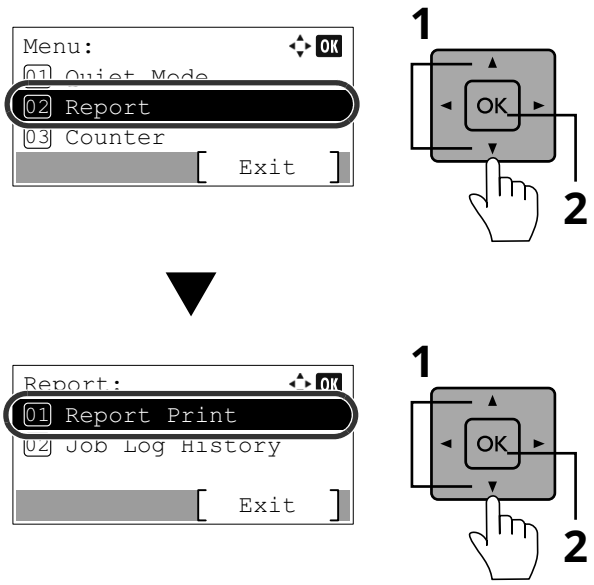

2 [▲] [▼] key > [**Status Page**] > [**OK**] key > [**Yes**]

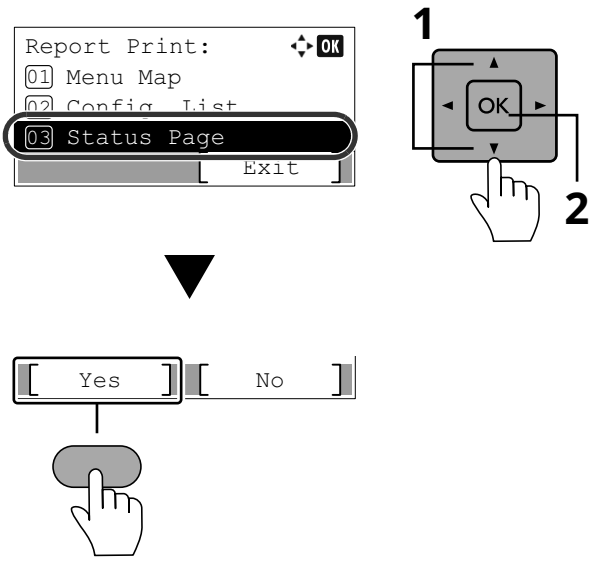

Step 6 Installing Software

Access the following URL and select your model and OS.
Download Center: https://kyocera.info/

For Windows
Download and run the Web Installer and follow the on-screen instructions to install the driver and software.

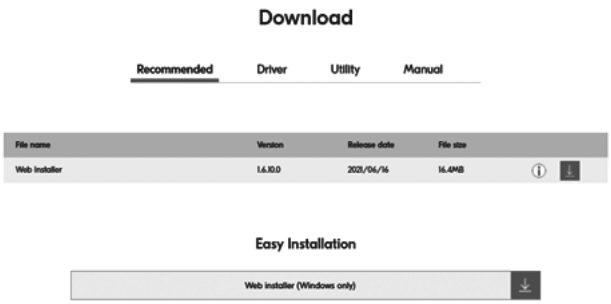

For Mac
Download and run the printer driver and follow the on-screen instructions to install.

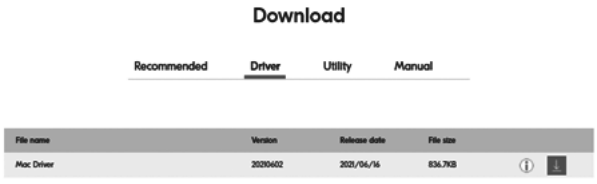

© 2024 KYOCERA Document Solutions Inc.

The Kyocera logo is a trademark of Kyocera Corporation.

3VC1F5605201