EN

Mamibot

ROBOT VACUUM CLEANER

EXVAC700-PIONEER

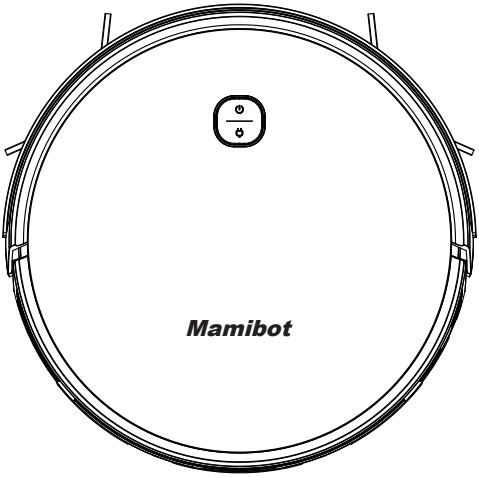

USER MANUAL

20220529 Ver.

Thanks for purchasing Mamibot gyroscope navigation robot vacuum cleaner EXVAC700-PIONEER.

We hope PIONEER will bring you a smarter and more convenient lifestyle.

If you encounter any problem not mentioned herein, please contact sales@mamibot.com.

For more details, please visit our official website: http://www.mamibot.com.

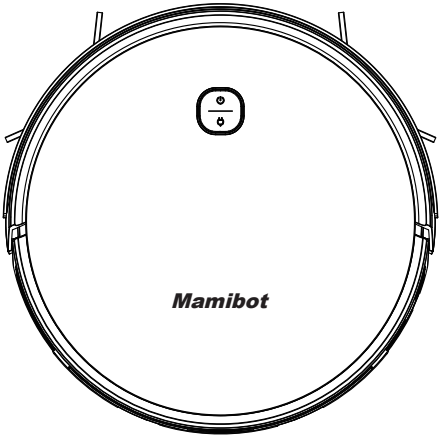

Please read all instructions before using this product, and keep it properly for future reference.

Table of Contents

Safety Instructions

1 Notes for Main Unit and Components
2 Notes for Battery
3 How to Remove the Battery

EXVAC700 Description

4 Specification
5 What's in the package
6-7 EXVAC700 Components

EXVAC700 Usage

8-10 Preparation
11 Switch On/Off / Auto Cleaning
Random Cleaning / Edge Cleaning
Manual Control
Schedule Setting or Time Setting
12 Pause / Sleep Mode
Fault State

App Connection & Water Tank

13 Wi-Fi Setup Requirements
13-17 App Connecting and Order
18 How to use Water Tank

Cleaning and Maintenance

19-20 Clean the Side Brushes
Cleaning the 2 in1 Dust Box & Water Tank
21 Clean the Roller Brush
21-22 Clean the Other Parts
23 Cleaning/Replacement Frequency

24-25 **Troubleshooting**

25 **Warranty**

26 **Hazardous Substances**

27 **Recycling & Compliance**

Safety Instructions

Please read all instructions carefully, and keep it in hands for setting up, using and maintenance. Any operation that against the following instructions may damage **EXVAC700-PIONEER** or cause injury.

Notes for Main Unit and Components

⚠ Warning

01. Do not disassemble, repair or refit EXVAC700 without authorization; otherwise it may damage EXVAC700 or pose a hazard.
02. Do not use the product in an environment with risk of fire or explosion.
03. Only the original charging station can be used; otherwise EXVA700 may be damaged or catch on fire.
04. Do not stand or sit on EXVAC700; doing so could damage EXVAC700 or cause it to fall over.
05. When the metal part of the power plug is dusty, please wipe it with a dry mopping cloth.
06. The power plug is applied to a 100-240V AC input voltage. Please plug it into the socket properly and keep away from children.
07. Do not wash or soak the main body and electronic accessories in water; otherwise EXVAC700 may be damaged by a short circuit.
08. Do not damage, load weight on, heat, pull, or bend EXVAC700.
09. During cleaning, please pay attention to the safety of toddlers and elders at home to avoid injury(Please pay special attention to toddlers).
10. This product is for home use. Please do not use it outdoors.
11. Do not allow metal and conductive materials to contact the battery; doing so may cause a short circuit.
12. Do not allow to be used as a toy. Close attention is necessary when used by or near children.

ⓘ Attentions

01. Do not touch EXVAC700 with wet hands; doing so may cause an electric shock.
02.Do not place EXVAC700 in places where it could easily fall, such as tables, chairs, high platforms in room, etc.
03. The product has a sophisticated design and should be protected from long-term exposure to sunlight.
04. Do not use EXVAC700 in humid environments, such as bath-rooms.
05. Do not place EXVAC700 near cigarette butts, lighters or other open fires.
06. Please clean EXVAC700 after charging finished.
07. Please turn off the power switch when EXVAC700 is out of service for a long time.
08. Please check carefully to see if the power cord is connected to the socket and charging station prior to use, to avoid damage to the robot.

09. Before using EXVAC700, please remove all vulnerable items on the floor, such as glass, lamps, and items such as wires and curtains that may entangle with the side brush and suction passages.
10. When the dust box is full, please empty it in time.
11. Please do not use EXVAC700 to clean the construction waste.
12. The operating temperature of the product ranges from 0℃-40℃; please do not use it in a high temperature environment.
13. Be aware that EXVAC700 just moves around on its own, please take care when walking in the area where EXVAC700 is cleaning.
14. Before EXVAC700 is scrapped, please remove the battery from the robot. When you remove the battery, please ensure that EXVAC700 is not connected to a power source. Please recycle the battery safely for environmental protection.

Notes for Battery

⚠ Danger

01. Always use a dedicated battery pack and charging station to avoid leakage,heating or explosion.
02. Do not short-circuit the battery or remove the battery; doing so may cause leakage, heating or explosion.
03. Do not transport or preserve with necklaces, hairpins, and other metal objects; doing so may lead to short circuit, resulting in leakage, heating or explosion.
04. Do not burn or heat the battery; doing so may cause leakage, heating or explosion.

ⓘ Attention

01. If abnormal overheating is discovered during charging, stop using it immediately to avoid leakage, heating or explosion.
02. To prolong the service life of the battery, please remove the battery and place it in a cool, dry environment if it is out of service for a long time; this will avoid leakage, heating or explosion.
03. Do not soak in water or let it come into contact with any liquid; otherwise it may cause leakage, heating and explosion.
04. Be sure to stop using it immediately in case of any exception (e.g.discoloration or deformation), to avoid leakage, heating and explosion.
05. Always use tape to insulate the battery's electrode when recycling or disposing of it.
06. If the battery leaks, wipe it clean with a dry cloth, recycle it in time, or discard it.
07. Put the recycled batteries in the recycling bins set up by the community, hotels, schools, large shopping malls, supermarkets, etc, or the hazardous trash can be collected by professional recycling agencies.

Discarded batteries must be removed and discarded in accordance with local laws and regulations.

⚠ **Warning**

01. When skin or clothing is exposed to the battery electrolyte, immediately wash with clean water to avoid inflammation of skin, etc.
02. Do not use the rechargeable battery on other devices. This battery is only suitable for EXVAC700.
03. If the battery's outer box is found to be deformed and expanded, or leakage of electrolytes is found, do not charge or continue to use to avoid danger.
04. Do not throw or inflict a strong impact on the battery; doing so may cause leakage,heating and explosion.
05. Do not disassemble the battery pack; doing so may cause battery explosion and electrolyte outflow, leading to fire,explosion and other dangers.
06. Battery pack should be repalced after 1 year of purchase.

How to Remove the Battery

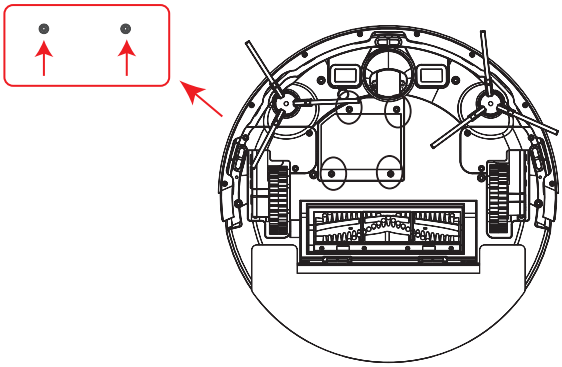

01. The battery must be removed from EXVAC700 before it is scrapped, and the battery must be put into the designated places or institutions according to the local regulations.
02. Before removing the battery, please switch off the robot.
03. Take out **four screws** on the bottom cover with a screw driver.
04. Take off the battery cover, unplug the electric wires and remove the battery pack.

EXVAC700 Description

Specification

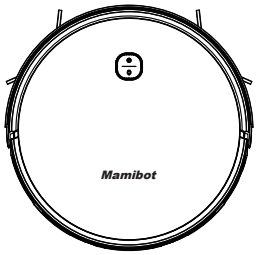

Product Model	EXVAC700
Product Name	PIONEER
Size of Main Unit	320*75 mm
Net Weight	About 2.62 KG
Input	19V⎓ 0.6A
Rated Power	16W
Battery Type	Li-ion Battery
Battery Capacity	2600mAh
Battery Voltage	14.4V
Dust Box Capacity	340 ml
Water Tank Capacity	250 ml
Working Time	＜140mins
Charging Time	About 5-6 hours

※ The data come from the lab of Mamibot Manufacturing USA Inc. It may be slightly different from the users data, please subject to the actual products. For continous products improvment, we reserve the right to any technical and design change without prior notice.

What's in the package

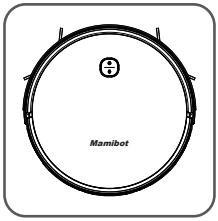

EXVAC700 x 1

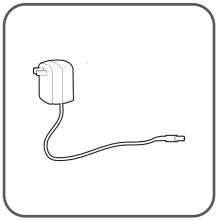

Adapter x 1

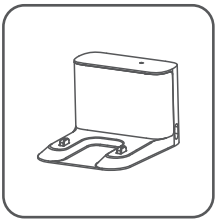

Charging Station x 1

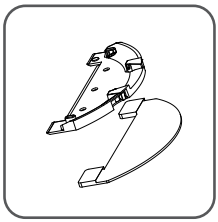

Mopping Plate x 1

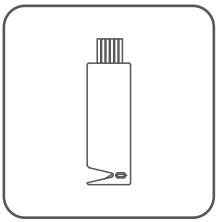

Cleaning Tool x 1

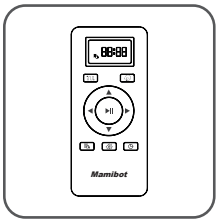

Remote x 1
AAA Battery x 2(Excluded)

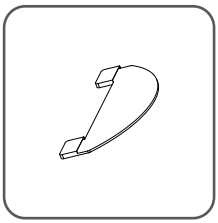

Mopping Cloth x 1

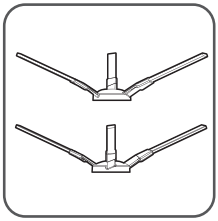

Side Brushes x 4

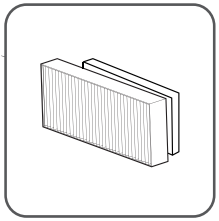

Additional HEPA x 1

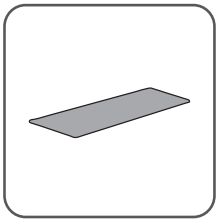

Additional Sponge x 1

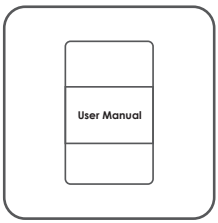

User Manual x 1

Accessories of different batches may be slightly different and they are subject to the actual received products.

EXVAC700 Components

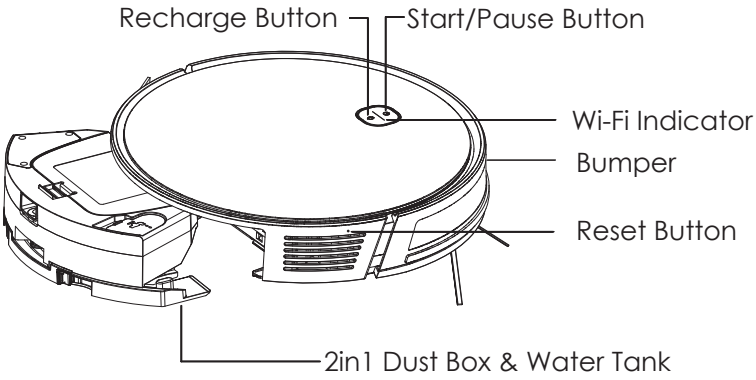

TOP VIEW

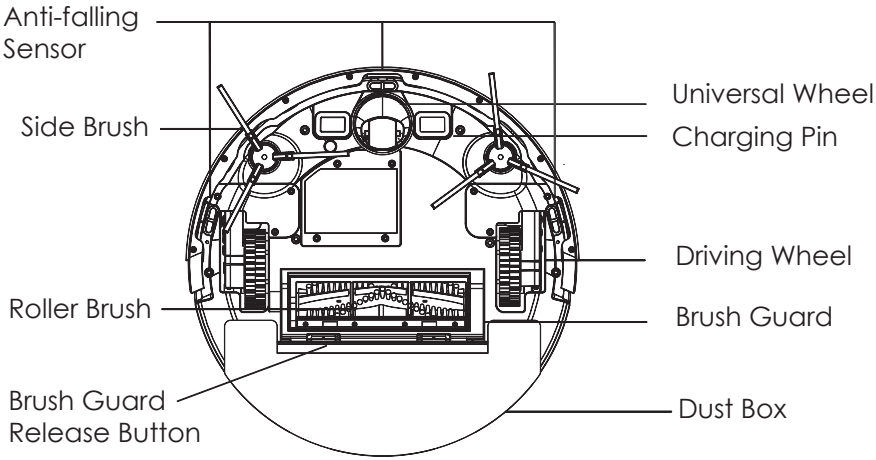

BOTTOM VIEW

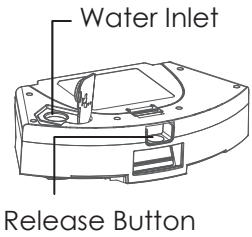

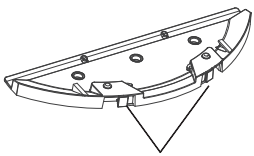

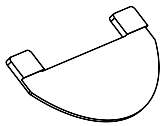

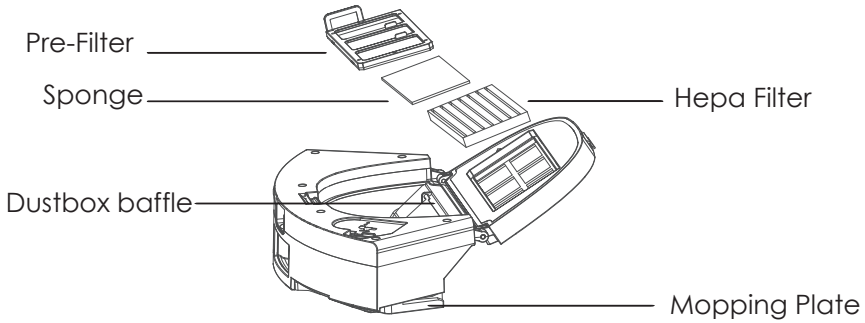

2 IN1DUST BOX & WATER TANK

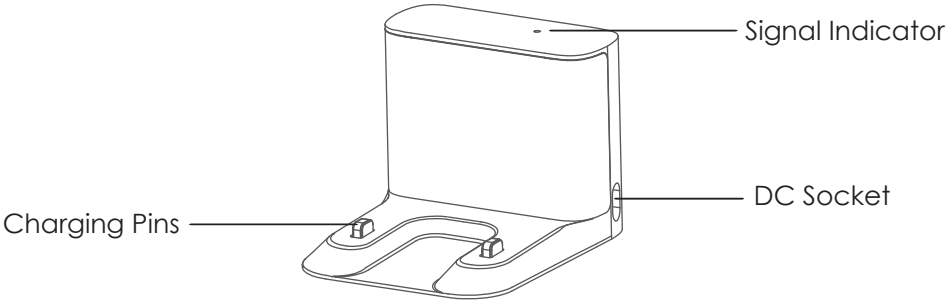

CHARGINIG STATION

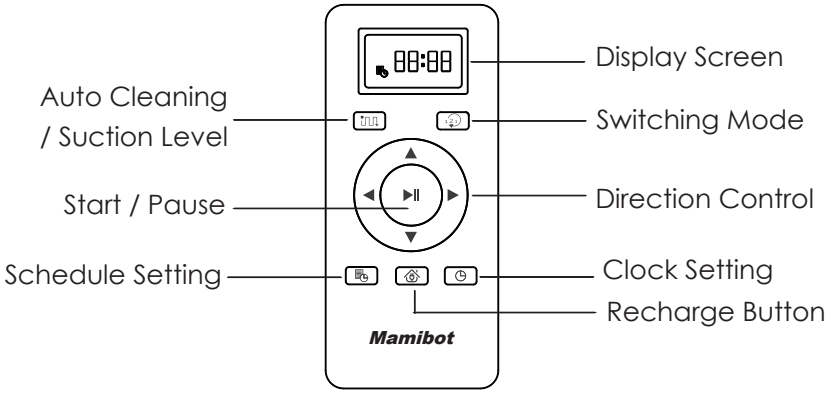

REMOTE

* Please put 2 pcs AAA battery into remote before use.

EXVAC700 Usage

Preparation

Remove The Protective Strip

Please remove the protective strip from both sides before use EXVAC700.

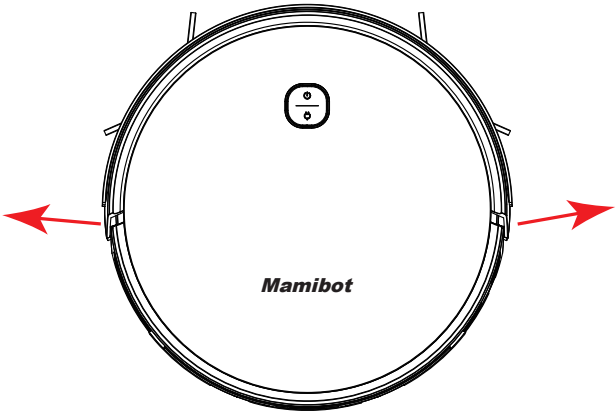

Robot Charging

1. Place the charging station on a flat ground and make sure the charging station against the wall.
2. Remove all objects within 0.5m/1.64ft of the left and right side, 1.5m/4.92ft of the front of the charging station.
3. Put the side brush on EXVAC700, then connect the power source.
4. **Charging**: Place the Robot on the charging station for charging: the recharging indicator light on the robot flashes purple (if battery is less than 20%) or blue (if battery is more than 20%) in breathing manner during charging, the indicator will be in steady blue when charging is finished.

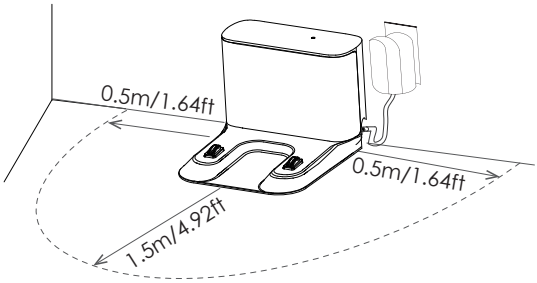

* Please check the indicator light of the charging station and be sure it is in green.

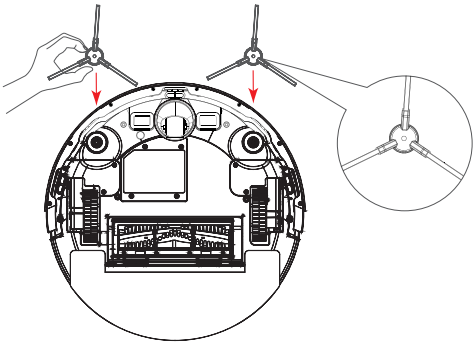

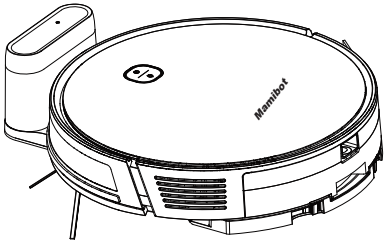

5. Auto recharge: EXVAC700 will go to find the charging station automatically for recharge when the battery power is less than 20% or when EXVAC700 finishes the cleaning work.
Press the charging button on app or press the "⏻" button on EXVAC700, EXVAC700 will go to recharge automatically.
6. If the robot can not find the charging station, it will go back to the starting point automatically or stop at somewhere that the robot is out of battery power. Please put the robot back to charging station manually.

Note:

• Please keep the charging station connected with the power source, or EXVAC700 will not be able to find the charging station.
• EXVAC700 can only be charged by the orignal charging station and adapter provided by Mamibot.
• Do not use the charging station in a highly reflective environment such as the environment exposed to direct sunlight or with mirrors nearby.
• EXVAC700 may not be able to find the charging station quickly at initial use, the efficiency of finding charging station will be improved after working several times.
• The charging time will be about 5-6 hours.
• Please turn off the robot if it will be out of service for a long time.
• Please charge EXVAC700 in time when the battery is used up.
• The battery should be repaired and replaced by the after-sales service center or local seller.

Preparation

⚠ Notes

1.Before starting EXVAC700, please clean up wires and sundries scattered on the ground, and remove easy-to-fall, fragile, valuable and potentially dangerous items. Avoid being entangled, jammed, dragged, or knocked down by the robot; Or personal or property damage may be resulted.

2.Avoid using this product in a watery area, otherwise the vacuum motor may be damaged.

3.Please set the forbidden area or fences at the stairway or similar areas.

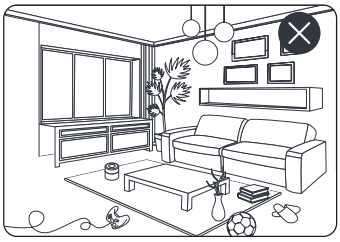
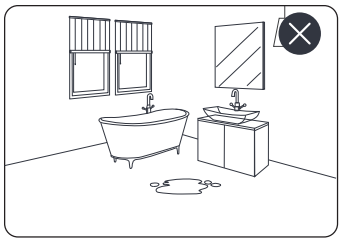
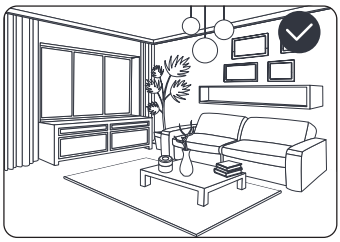
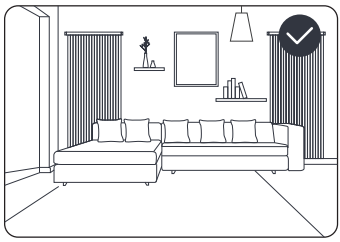
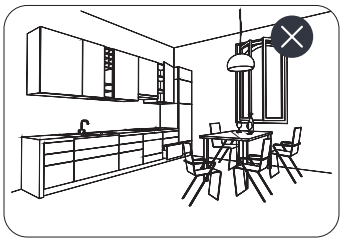
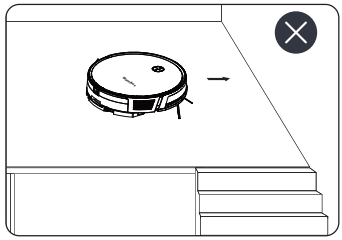
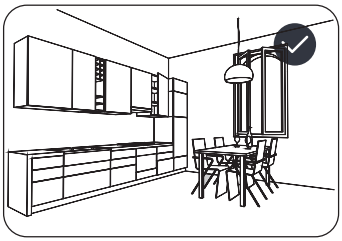
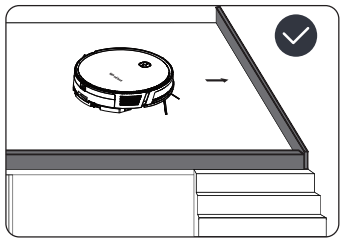

Switch On/Off

Hold and press ⏻ key for 3 seconds to switch on EXVAC700, power indicator light in dark blue and EXVAC700 enters into standby mode.
When EXVAC700 is in quiescent state, hold and press ⏻ key for 5 seconds to switch off EXVAC700.
Notes: The robot can not be switched off while charging.

Auto Cleaning

Press ⏻ key on robot or the button on remote, or smart button on APP to start auto cleaning, the robot automatically plans the cleaning path according to the map generated in " Zigzag ".

Random Cleaning

Press random button on APP or the switching mode button on remote to choose random cleaning, then start cleaning.

* It is recommended to start the random cleaning mode for single room.
* It is recommended to close the door in random cleaning mode.
* EXVAC700 will go back to the start place if it can not find the charging station or stay somewhere that it is out of battery power.

Edge Cleaning

Press wall follow button on APP or the switching mode button on remote to choose edge cleaning, then start cleaning.
* EXVAC700 will go back to the charging station after edge cleaning finished.

Manual Control

Press the manual button on APP or the manual panel on remote to control EXVAC700 manually.

Schedule Setting or Time Setting

Press the button and to enter into the schedule setting mode and time setting mode, set the schedule or local time with manual panel

, press the button  and  again to complete the setting.

Pause & Sleep Mode

While working, you can press ⏻ on robot or the button  on remote to pause the robot.
If EXVAC700 stops working more than 10 minutes, it will enter into the sleep model. Press ⏻ on robot to wake up EXVAC700, then press it again or press any other cleaning button on remote or APP to start cleaning again.

* Robot can not enter sleep mode while charging.
* If the sleep time exceeds 12 hours, EXVAC700 will power off automatically.
* Please keep the robot on charging station for next use.

Fault State

If EXVAC700 encouters a fault while working, the power indicator flashes quickly in red, users will get prompt from the robot or get message from the APP, please check the robot with the troubleshooting.

Note:
Please clean up all the objects on the ground before cleaning, otherwise EXVAC700 may drag the cables and lead to the power off of other home appliances or damage of items or cables.

APP Connection And Water Tank

Wi-Fi Setup Requirements

Before Wi-Fi setup, please make sure that EXVAC700 and your Wi-Fi network meet the following requirements.

1. The Wi-Fi Network you are using is 2.4GHz router or a dual-band router. EXVAC700 does not support 5GHz frequency band.
2. The Wi-Fi network you are using supports 802.11b/g/n and IPv4 protocol.
3. Please make sure that there is no illegal character in your SSID, or the Wi-Fi may not be recognized.
4. Please don't use a virtual Private Network(VPN) for connection.
5. Please make sure that your password is correct when entering.
6. Please make sure EXVAC700 is fully charged or on the charging station, and EXVAC700 is switched on.
7. Please make sure that you hear the voice of prompt for connection, and the Wi-Fi status light flashes in blue.
8. Please make sure that your EXVAC700, Router and Smartphone are as close as possible.

* **Wi-Fi Indicator light:**
Flashes in blue slowly: EXVAC700 is waiting for connecting.
Flashes in blue quickly: EXVAC700 is in connecting.
Keeps steady(blue color): EXVAC700 is connected.
Goes off: EXVAC700 is unconfigured or is switched off.

APP Connecting and Order

1. APP downloading
Scan the below QR code (Fig. 1) or (Fig. 2) to download the APP of "Smart Mamibot" or "Smart Life" from App Store (IOS devices) or Google Play (Android devices).

(Fig. 1)

Smart Mamibot

(Fig. 2)

Smart Life

2. Log in/Register "Smart Mamibot" or "Smart Life" ID.
Enter the APP, log in with your **"Smart Mamibot" or "Smart Life"** ID

directly, or follow the instructions and creat a new user ID according to the Fig. 3 to Fig. 7 (we take smart mamibot as an example to demonstrate), then log in and enter APP interface.

3. Connect EXVAC700 to the App.

Tap the " ⊕ " icon or "Add Device" and enter the interface as Fig.8 to add EXVAC700 to your Smart Mamibot ID: click the "smart home appliances", then click the "Robot Vacuum (Wi-Fi) " as Fig. 9, enter into the connection interface as Fig.10, use 2.4Ghz to connect the wifi as Fig.10, input the wifi or personal hotspot password, next enter into the

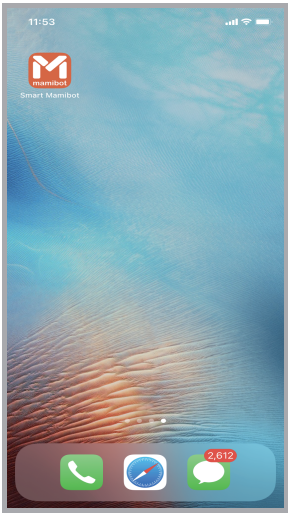

Fig.3

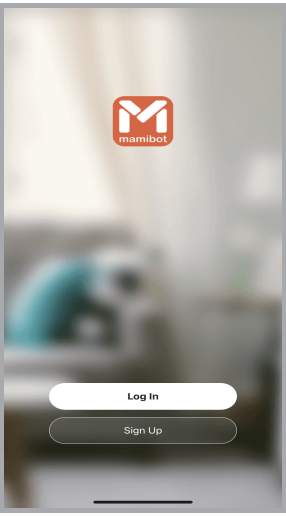

Fig.4

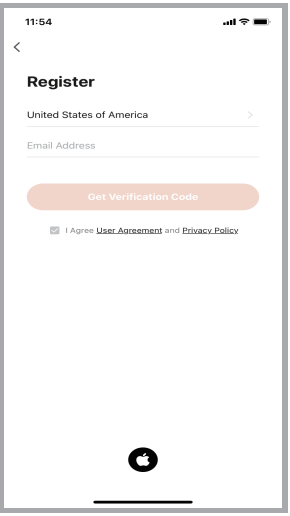

Fig.5

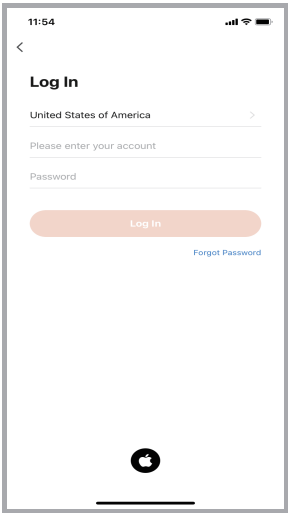

Fig.6

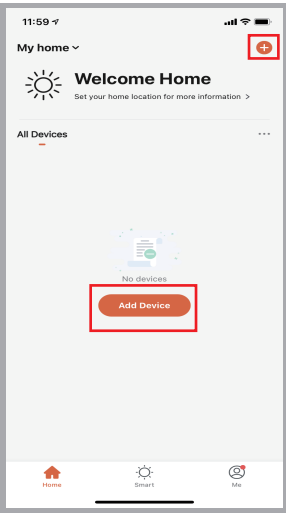

Fig.7

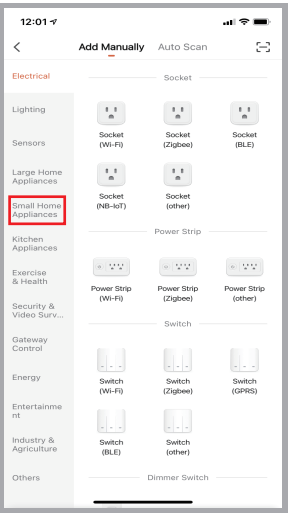

Fig.8

Fig.6 Fig.7 Fig.8

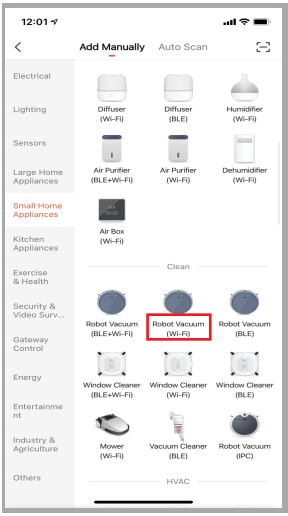

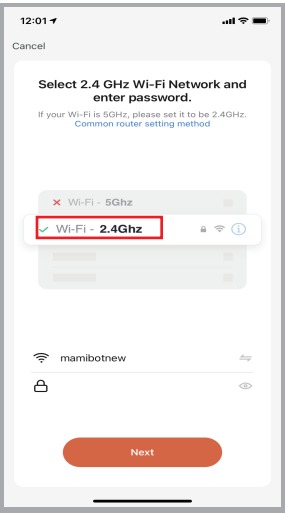

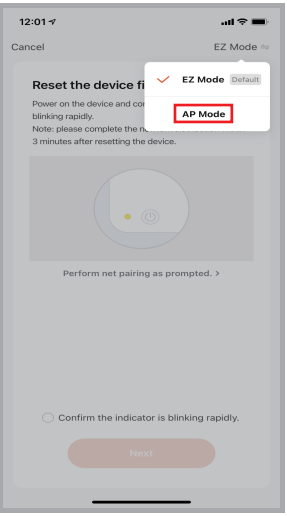

Fig.9 Fig.10 Fig.11

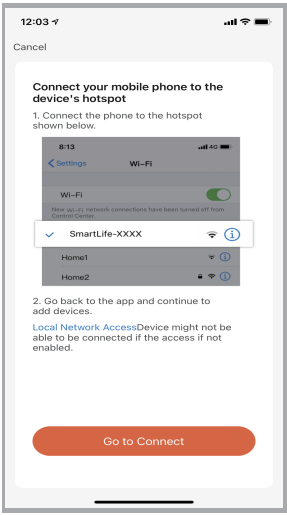

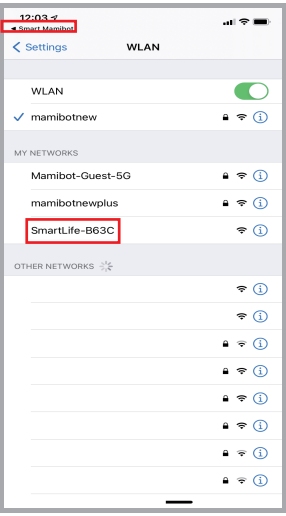

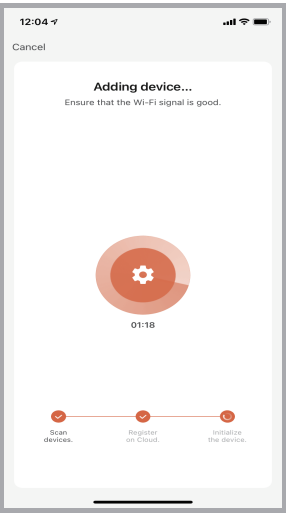

Fig.12 Fig.13 Fig.14

interface of Fig.11, choose the " AP Mode " and press the **recharge button** ⏻ on the robot for 3 seconds until the WIFI indicator light flashes in blue quickly, then go to next step as Fig.12 (users can also switch on the bluetooth, and connect the robot with BLT mode that is the similar operation).

Connecting to the hotspot "SmartLife XXXX", then go back to the APP

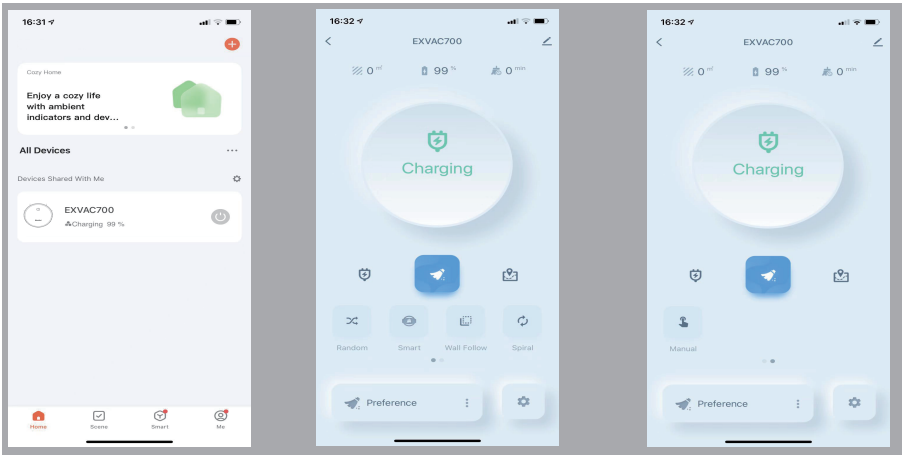

Fig.15 Fig.16 Fig.17

connection interface as Fig.13 and Fig.14, after connection done, tap the main interface "Mamibot EXVAC700" as Figt.15, then enter into Fig.16 and Fig.17.

* **Reset Wi-Fi:** If your mobile phone fails to connect to the robot due to reasons such as change of router settings, forgetting of password or some other reasons, please enter the Wi-Fi configuration mode on your mobile phone according to the network connection instructions.

If the robot is in waiting for connection state for more than 2 minutes, the Wi-Fi function will automatically close. To reconnect the robot to your mobile phone, hold and press the start button on robot to reset the Wi-Fi setting.

3. Control the EXVAC700 via APP.

A)

● On APP, users can check the working status, the cleaning time, the cleaned area, the battery status, etc (Fig.16).
● Users can start the smart cleaning mode, random cleaning mode, edge cleaning mode or spiral cleaning mode (Fig.16).
● Users can check the current cleaning map (Fig.20).
● Users can control the robot manually via manual button (Fig.17).
● Users can set the vacuum suction with quiet, standard, power and Max four levels, set the water level when robot works with mopping mode (Fig.18).
● More functions are shown in the "**more**" menu, such as Schedule Setting, Find Robot and Cleaning Records, etc (Fig.19).

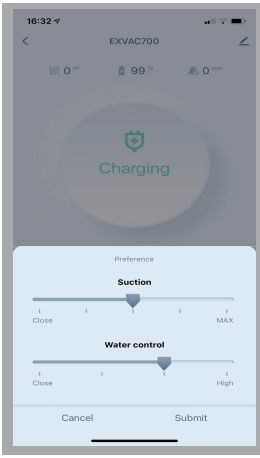

Fig. 18

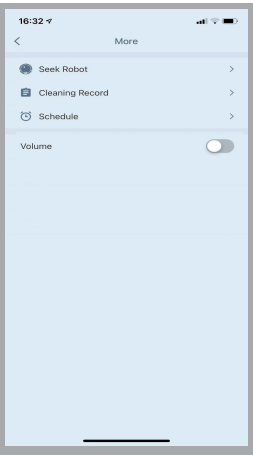

Fig. 19

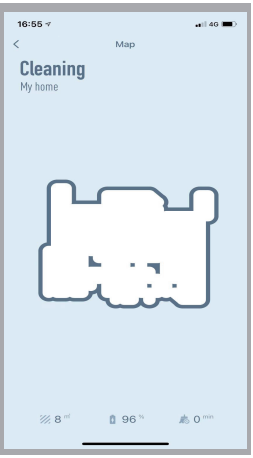

Fig. 20

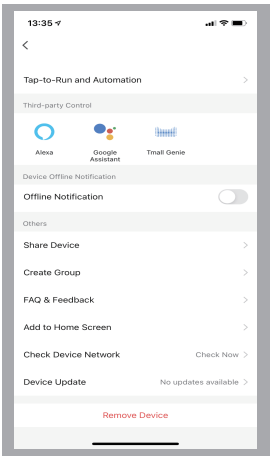

Fig. 21

B). Click " ✎ " on the main interface and enter into the interface Fig.21, users can get to know the guides of connecting EXVAC700 to the third-party, such as Alexa, Google home, etc, to create group, to check device network or update the firmware of the robot or remove the device.

*The operation guides or interfaces may be different from the final product, please subject to the actual products.
* In order to improve the product, we reserve the right to upgrade the APP or the products without prior notice or obligation.
* Please keep the main power switch on so that EXVAC700 can do the cleaning work on schedule.
* Please make sure the battery is higher than 20%, if the battery is less han 20%, EXVAC700 will go to recharge automatically.

How to use Water Tank

1). Open the sealing cap of the water tank, fill it up with clean water then cover it tightly.

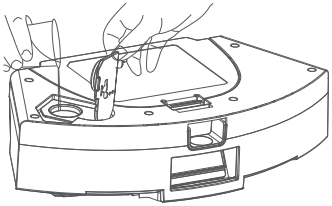

2). Attach the microfiber mop to the mopping plate, put the mopping plate on the water tank tigtly.

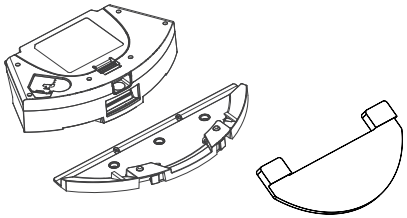

3). Put the 2in1 dust box & water tank on EXVAC700, start your robot.

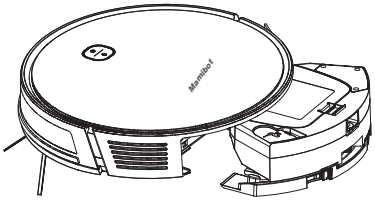

* Attention
- Do not add dirty water or corrision/flammable liquid into water tank.
- Do not spill water on EXVAC700.
- If the water goes into EXVAC700, please cut off the power source as soon as possible, then switch off the robot, contact the local distributor for help.

Cleaning and Maintenance

Clean the Side Brushes

• The side brush can be bent or damaged after being used for a period time. Pull off the side brush and clean it with the cleaning tool or soft mop, or replace it with new side brush.
• The side brush can be reshaped with hot water if deformed: please put the side brushes into hot water for about 10 mintues, then take them out (Please take care of yourself to avoid being scalded by hot water).

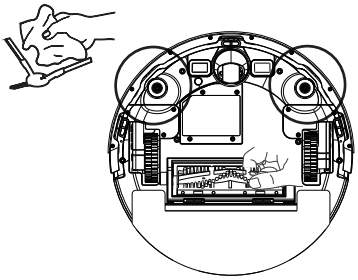

Clean the 2 in1 Dust Box & Water Tank

1). Press the dust box release button to pull the dust box out.

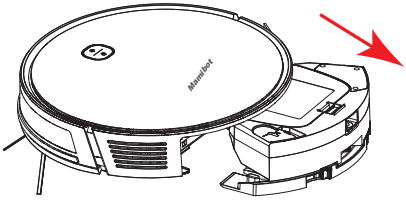

2). Empty the water tank, then open the dust box and empty the debris.

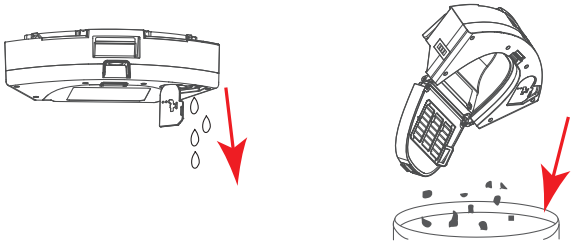

3).
• Remove the mopping cloth from the mopping plate.
• Remove the pre-filter by pulling the hooks on the pre-filter, take out the sponge and Hepa.

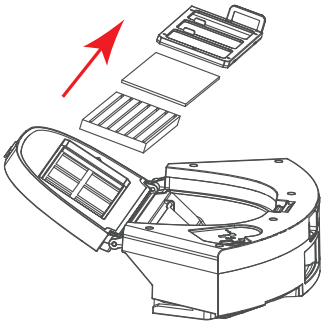

4).
• Clean the HEPA only with the cleaning tools, do not wash the HEPA with water.
• Clean the dust box, pre-filter and sponge with the cleaning tool and clean water.
• Clean the mopping cloth with clean water.

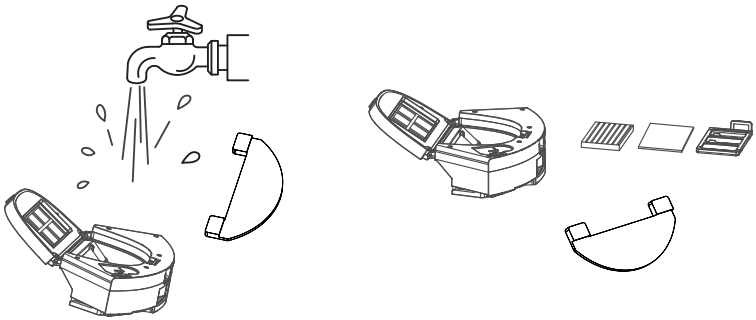

5).
• Dry the dust box, Hepa, pre-filter, sponge and mopping cloth, do not exposure the HEPA in the sunlight.
• Put the sponge, pre-filter, HEPA back together into the dust box, then put the dust box back into the main unit.

* Before installing the filters, ensure that the pre-filter, sponge and HEPA filter are dry.

Clean the Roller Brush

1). Release the brush guard and pull out the roller brush.
2). Clean the roller brush with cleaning tool.

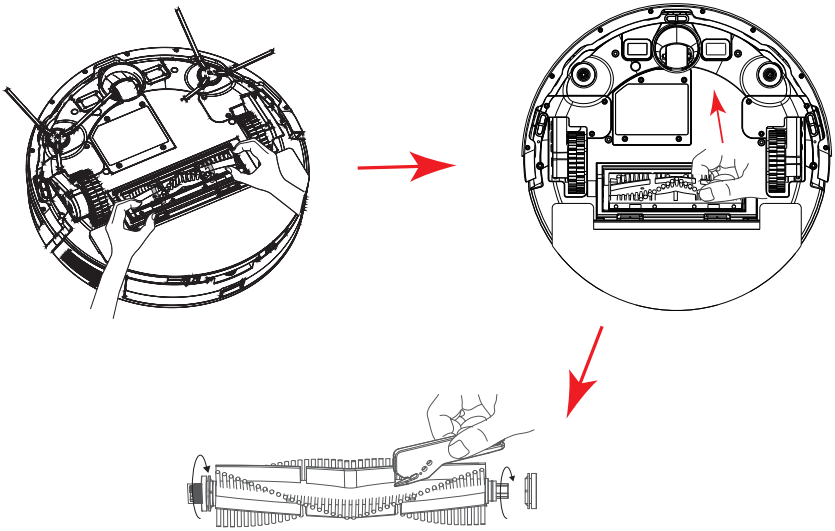

Clean the Other Parts

• Clean the charging pins on EXVAC700 and charging station with dry and soft mopping cloth.
• Clean the Anti-falling sensors with dry and soft mopping cloth.
• Clean the bumper with dry and soft mopping cloth.
• Pull out the Universal wheel and clean the hair or debris wrapped or entangled with the wheel, then reinstall it after cleaning finished.
• Turn over the side wheels manually, clean them with dry and soft mopping cloth.

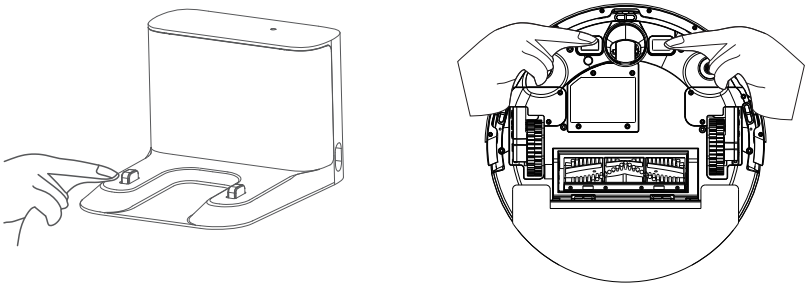

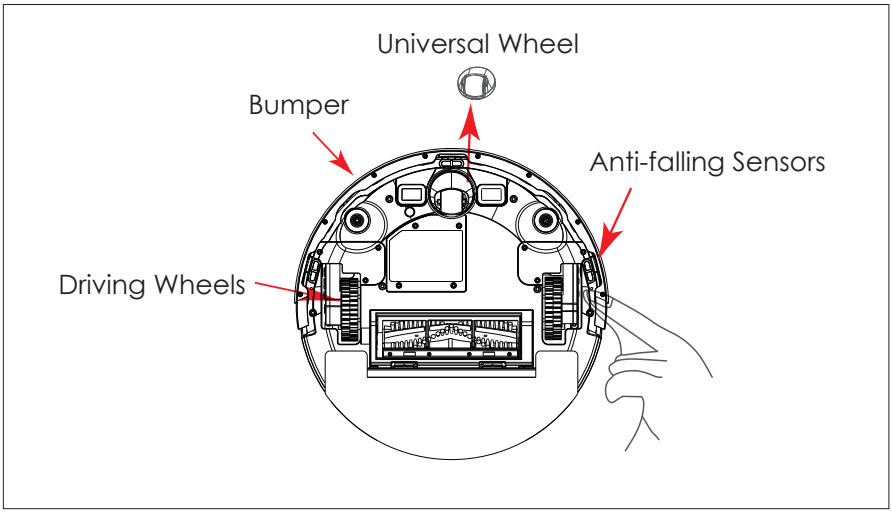

* Charging pins, anti-falling sensors, bumper, driving wheels, etc, contain sensitive electronic components, please do not use wet cloth for maintenance.

Cleaning / Replacement Frequency Recommended

Part	Cleaning / Replacement Frequency Recommended
Side Brushes	Clean every month; Replacment every 3-6 months.
Roller Brush	Clean every month; Replacment every 3-6 months.
Dust Box & Water Tank	Clean after each use.
HEPA	Clean every 2-3 times use; Replacement every 3-6 months.
Pre-filter	Clean every 2-3 times use; Replacement every 3-6 months.
Sponge	Clean every 2-3 times use; Replacement every 3-6 months.
Mopping Cloth	Clean after each use; Replacement 6-12 months.
Universal Wheel	Clean every month
Anti-falling sensors	Clean every month
Bumper	Clean every month
Charging Pins	Clean every month

Note:
Above frequency is only for your reference. The final cleaning/replacment frequency should subject to your exact use frequency.

Troubleshooting

Problems	Solutions
EXVAC700 can not be charged	• Make sure the charging cord connects with power source and charging station correctly and the indicator light is on. • Clean the charging pins on both the charging station and EXVAC700 with dry and soft cloth, then charge again.
EXVAC700 can not be activated.	• Make sure the main power switch is turned on. • Make sure EXVAC700 is fully charged.
EXVAC700 Stops working suddenly.	• Check the battery status. • Make sure the cleaning mode is not in Spiral Cleaning . • Check the working conditions and make sure EXVAC700 is not trapped by obstacles. • Press Reset Button to reset EXVAC700
EXVAC700 does not work as scheduled.	• Make sure the main power switch is turned on. • Make sure EXVAC700 is fully charged. • Make sure EXVAC700 is not stuck at some places.
EXVAC700 goes back to recharge before finishing cleaning.	• EXVAC700 will go back to recharge if the battery is lower than 20%, make sure it is fully charged. • Reset EXVAC700 to reset button.
The working path and map of EXVAC 700 is abnormal.	• Remove the objects, such as cables, shoes from the floor. • Clean the anti-falling sensors and bumper with soft cloth. • Keep the wheels dry, the path of EXVAC700 will be abnormal if the wheels are wet. • Upgrade the latest version of firmware through APP setting. • Reset EXVAC700 to reset button.
EXVAC700 step back when working.	• Clean the Infrared sensors and the bumper with soft cloth.
Suction power is weak than before.	• Clean and empty the dust box. • Clean the pre-filter, sponge and HEPA and dry them. • Clean the roller brush. • Clean the suction inlet.
EXVAC700 can not connect to users' Wi-Fi network.	• 5G router network is not avaiable for EXVAC700. Make sure the router network supports 2.4GHz. • Keep the router, EXVAC700 and smartphone be closer to each other, proceed with connection as per manuals & APP instructions.

Problems	Solutions
EXVAC700 can not connect to Alexa or google home.	• Make sure users have installed Alexa or google home APP. • Make sure users have followed the guide of connection.
EXVAC700 repeat clean some areas.	• Make sure the floor is dry. • It is normal that EXVAC700 repeat clean some areas some time due to the gyroscope navigation technology.
There is abonormal noise during cleaning.	• Check the roller brush, side brush, universal wheel/driving wheels, make sure all of them work well without entangled.
EXVAC700 missed some areas during cleaning.	• Please check the bumper and anti-falling sensors, clean them, and also make sure the bumper can rebound normally.
EXVAC700 can not find the charging station sometimes.	• Please clean up the objects in the rooms. • Please do not move the robot manually during cleaning. • Check the Wi-Fi signal, make sure the robot is under the coverage of Wi-Fi signal. • Please put the robot back to the charging station manually.
Notice: • EXVAC700 is only for indoor cleaning, it works well on the hard floor, wooden floor, marble floor or short carpet floor. Please also keep regular cleaning for EXVAC700. • Please contact the local distributor or after-sales service center if the problem still can not be solved after taking these measures.	

Attention:

All the referred trade marks in the manual: Alexa, google home, google play, Apple, APP store, Tuya, Smart Life, etc, the trademarks belong to its registered company in the correspond countries or areas.

Warranty

• The EXVAC700 has a 1 year limited warranty against original defects in workmanship or material.
• The warranty only applies to the authorized distributors of Mamibot.
• Improper usage or not in accordance with the user manual will void the warranty.
• The application of force majeure will be invalid.
• Normal reductions, such as battery aging, hepa aging are not guaranteed.

* Please keep and provide your proof of purchase, S/N when make a claim.

Hazardous Substances

Component	Content of Hazardous Substances					
	Plastic Shell	Circuit module of the Robot	Battery	Metal Parts	Power cord (Metal Parts)	Electronic Components
Cadmium(Cd)	O	X	O	X	X	O
Lead(Pb)	O	X	O	X	X	O
Mercury(Hg)	O	O	O	O	O	O
Hexavalent Chromium (CrVI)	O	O	O	O	O	O
Polybrominated Biphenyls(PBB)	O	O	O	O	O	O
Polybrominated Diphenyl Ethers (PBDE)	O	O	O	O	O	O
Bis(2-ethylhexyl) Phthalate(DEHP)	O	O	O	O	O	O
Butyl Benzyl Phthalate (BBP)	O	O	O	O	O	O
Dibutyl Phthalate (DBP)	O	O	O	O	O	O
Diisobutyl Phthalate (DIBP)	O	O	O	O	O	O

The time of the components for environment protection concern is 10 years. The time is valid under the use conditions of this manual.

O: It indicates that the content of the hazardous substances in all homogeneous materials of the compoents is in compliance with the council RoHS 2 Directive (EU) 2015/863 and (EU) 2017/2102 amending Annex II to Directive 2011/65/EU.

X: It indicates that the content of the hazardous substances in all homogeneous materials of the compoents is the exempt item according to the council RoHS 2 Directive (EU) 2015/863 and (EU) 2017/2102 amending Annex II to Directive 2011/65/EU.

Recycling & Compliance



The symbol on the product or on its packaging indicates that this product may not be treated as household waste. Instead it should be taken to the appropriate collection point for the recycling of electrical and electronic equipment. By ensuring this product is disposed of correctly, you will help prevent potential negative consequences for the environment and human health, which could otherwise be caused by inappropriate waste handling of this product. For more detailed information about recycling of this product, please contact your local council, your household waste disposal service or the shop where you purchased the product.

CE

The product is in compliance with Directive 2014/53/EU as below:
EN60335-1, EN60335-2, EN55014-1, EN55014-2
EN300 328, EN301 489-1, EN301 489-17..

We reserve the right to changes in text, design, and technical specifications which are subject to change without prior notice.

Manufacturer:

Mamibot Manufacturing (Shanghai) Co.,Ltd.
North of 21st Floor, No.1, Lane 1040 Caoyang Rd, Shanghai, 200063. P.R.C.

Supervised by

Mamibot Manufacturing USA Inc.
One Commerce Center, 1201 Orange St, Wilmington, DE 19899 USA
Tel: 001 302-428-9888 sales@mamibot.com www.mamibot.com