STEEL LEGEND 360 LCD SERIES

AIO LIQUID COOLER

Steel Legend 360 LCD / Steel Legend Dark 360 LCD

User Manual

Version 2.0
Published March 2026
Copyright©2026 ASRock INC. All rights reserved.

Copyright Notice

No part of this documentation may be reproduced, transcribed, transmitted, or translated in any language, in any form or by any means, except duplication of documentation by the purchaser for backup purpose, without written consent of ASRock Inc.

Products and corporate names appearing in this documentation may or may not be registered trademarks or copyrights of their respective companies, and are used only for identification or explanation and to the owners' benefit, without intent to infringe.

Disclaimer

Specifications and information contained in this documentation are furnished for informational use only and subject to change without notice, and should not be constructed as a commitment by ASRock. ASRock assumes no responsibility for any errors or omissions that may appear in this documentation.

To the extent permitted by law, with respect to the contents of this documentation, ASRock does not provide warranty of any kind, either expressed or implied, including but not limited to the implied warranties or conditions of merchantability or fitness for a particular purpose. In no event shall ASRock, its directors, officers, employees, or agents be liable for any indirect, special, incidental, or consequential damages (including damages for loss of profits, loss of business, loss of data, interruption of business and the like), even if ASRock has been advised of the possibility of such damages arising from any defect or error in the documentation or product.

Contact Information

If you need to contact ASRock or want to know more about ASRock, you're welcome to visit ASRock's website at http://www.asrock.com; or you may contact your dealer for further information. For technical questions, please submit a support request form at https://event.asrock.com/tsd.asp

ASRock Incorporation

e-mail: info@asrock.com.tw

ASRock EUROPE B.V.

e-mail: sales@asrock.nl

ASRock America, Inc.

e-mail: sales@asrockamerica.com

1. Product Overview

A Steel Legend 360 LCD Series

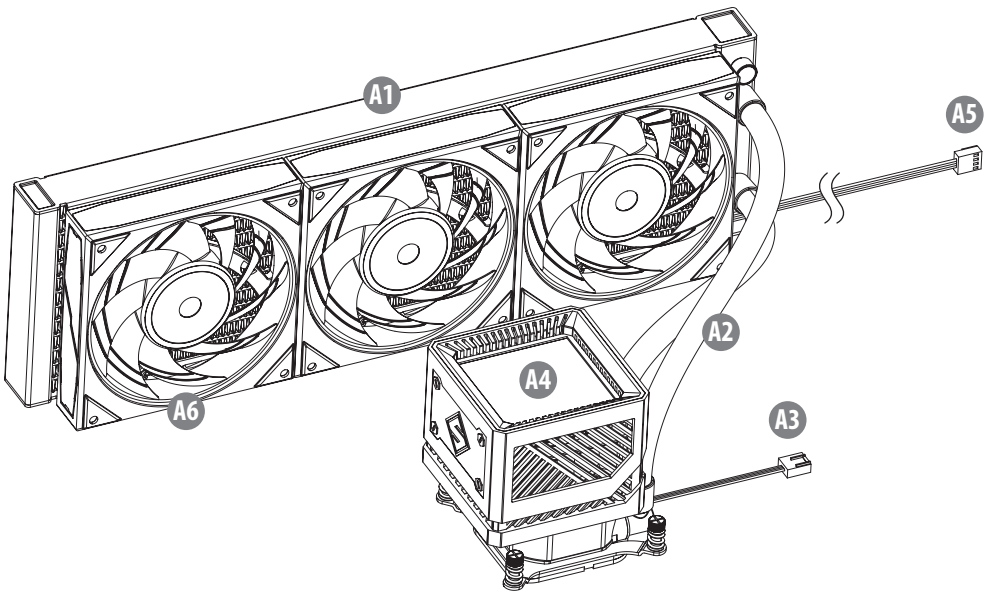

A1 Radiator
A2 Tubes
A3 Pump PWM 4-Pin Connector
A4 LCD Top Cover
A5 Fan PWM 4-Pin Connector
A6 Pre-Installed Fan

2. Package Contents

B **Intel Backplate*1**

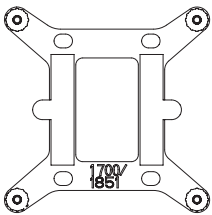

C **Intel Standoff*4**



D **AMD Bracket*2**

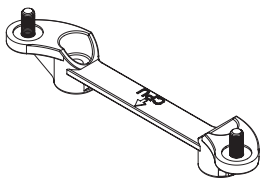

E **#6-32*6mm Screw*12 (Case Screw)**



F **Type-C Cable*1**

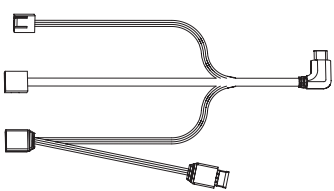

G **Thermal Paste*1**

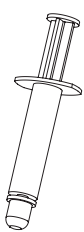

H **Tube Clip*3**



I **Spatula*1**



Intel
LGA1851 / 1700

3. Intel - LGA1851 / 1700

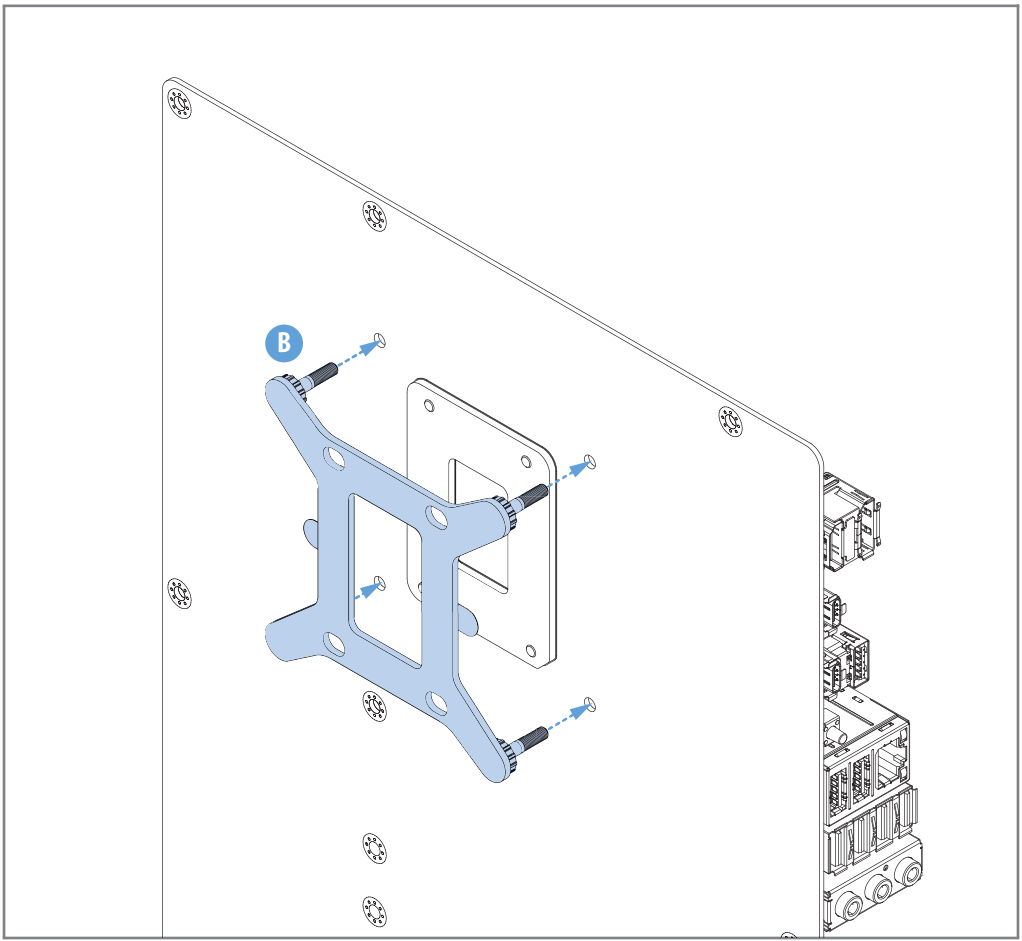

4. Intel - LGA1851 / 1700

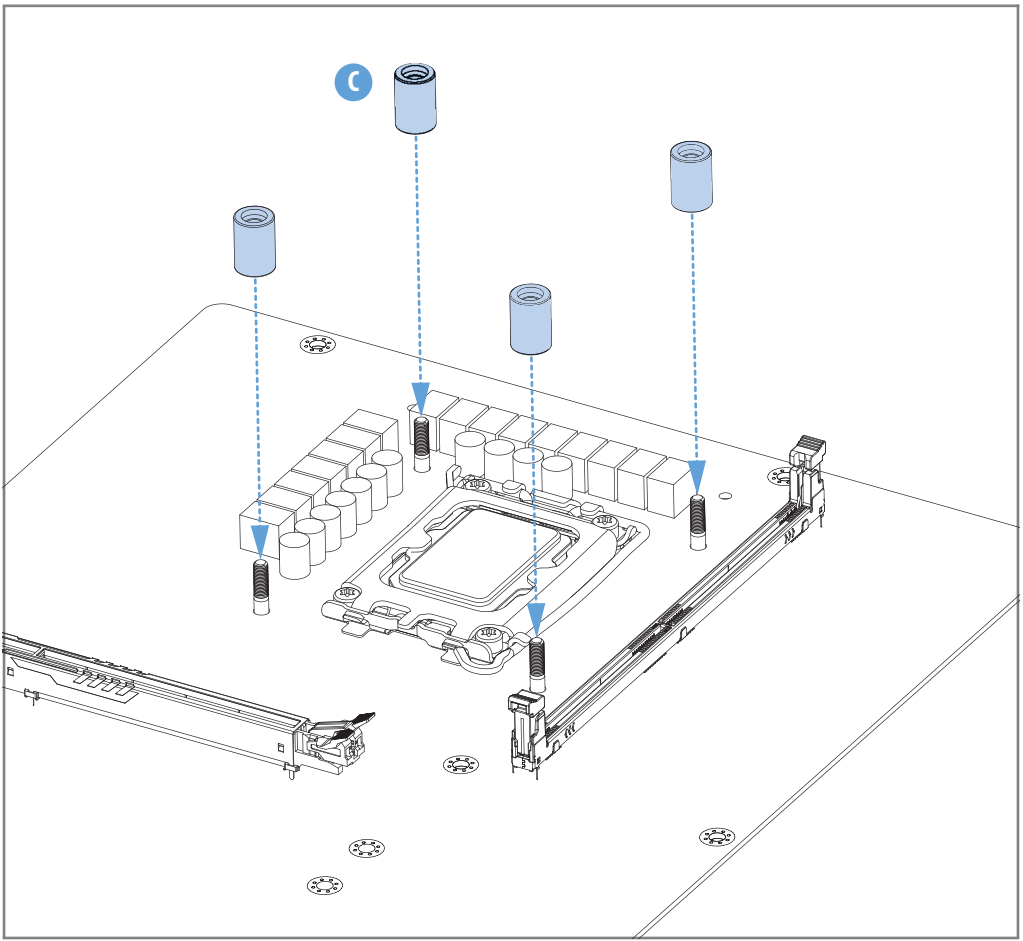

5. Intel - LGA1851 / 1700

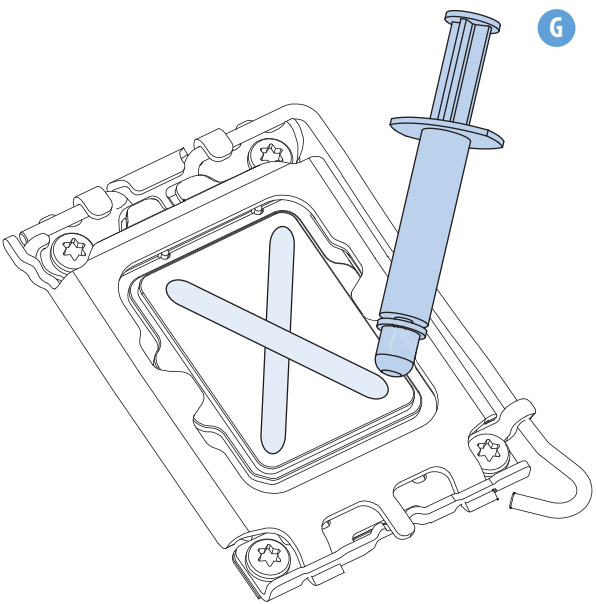

6. Intel - LGA1851 / 1700

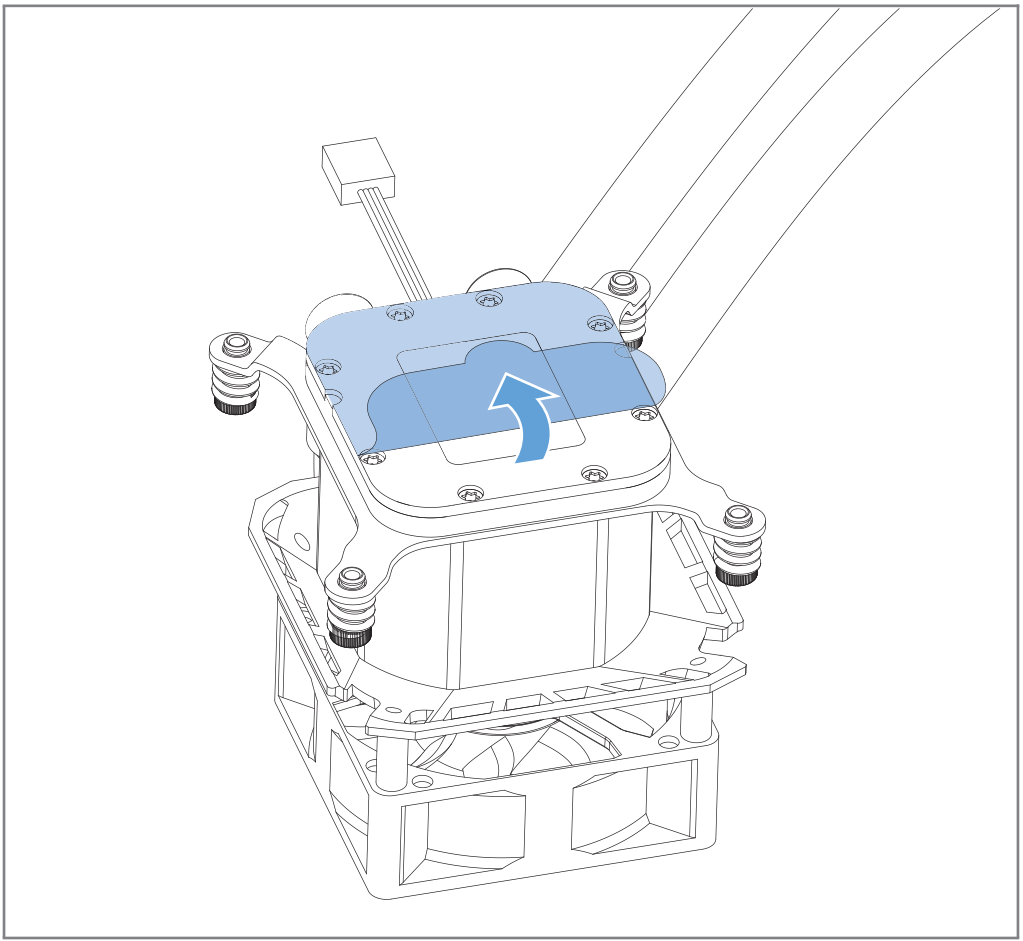

7. Intel - LGA1851 / 1700

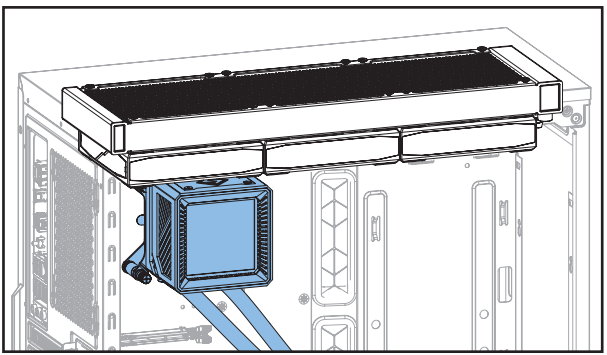

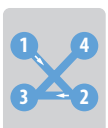

It is recommended to install the water block with the tubes facing downward.

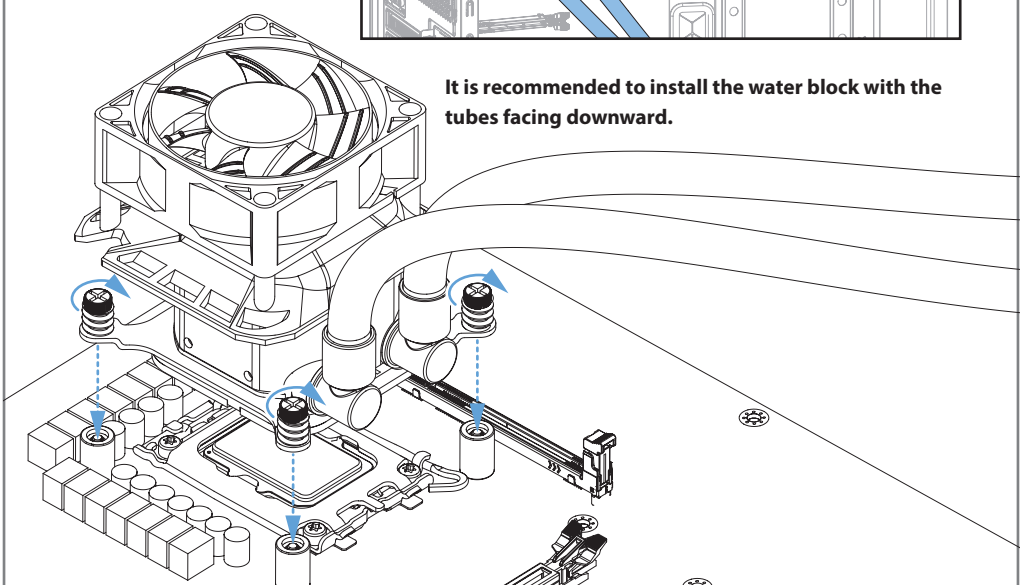

8. Intel - LGA1851 / 1700

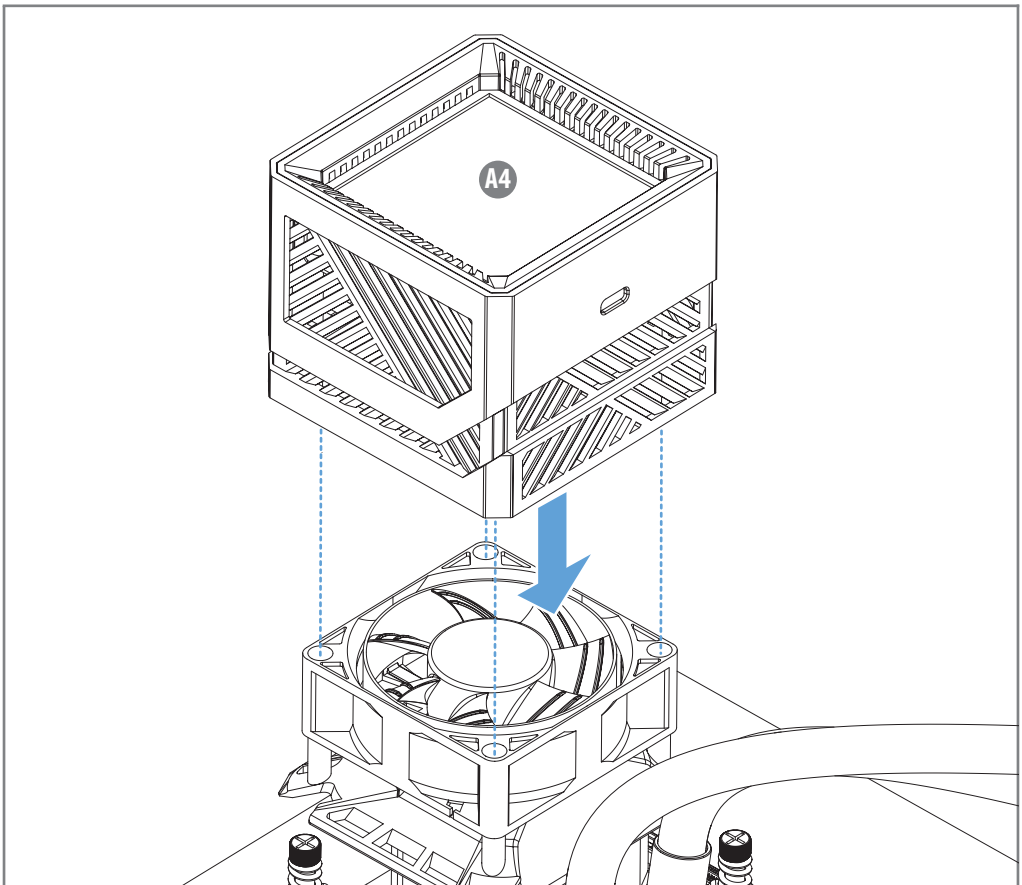

Proceed to page 16 to continue the installation.

AMD
AM5 / AM4

9. AMD - AM5 / AM4

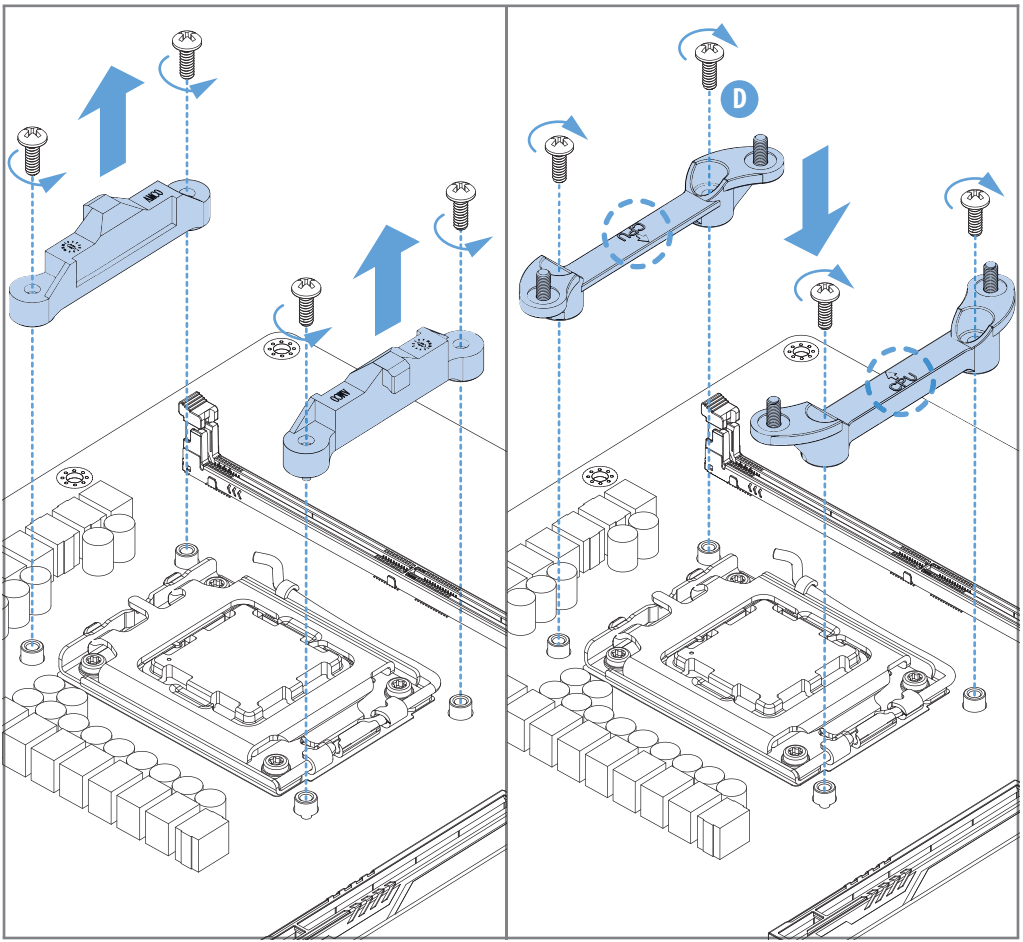

10. AMD - AM5 / AM4

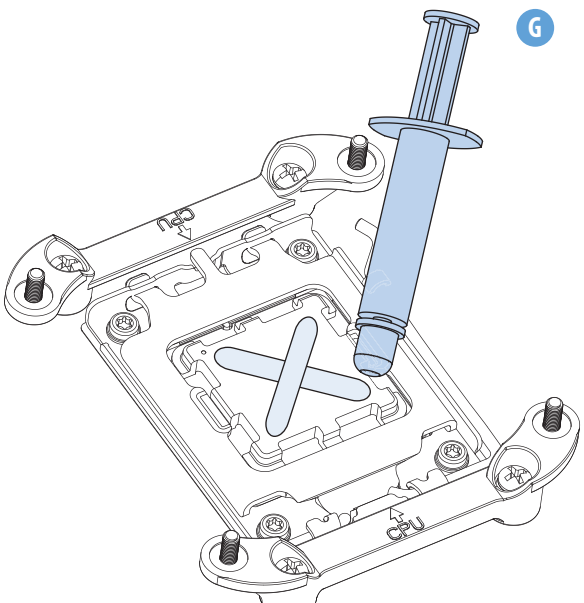

11. AMD - AM5 / AM4

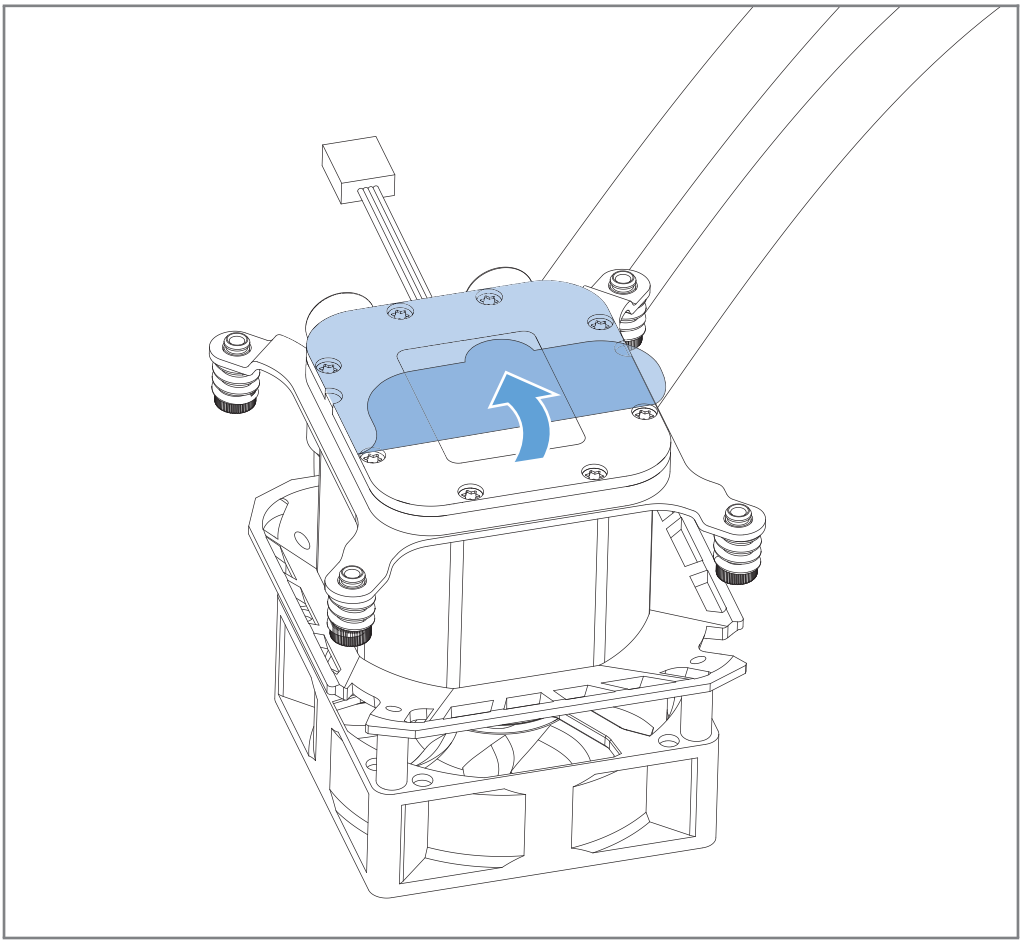

12. AMD - AM5 / AM4

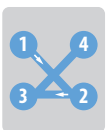

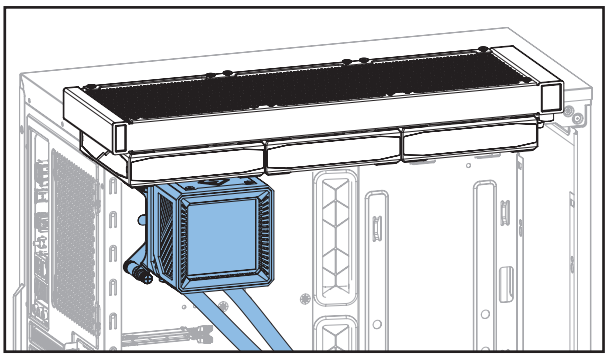

It is recommended to install the water block with the tubes facing downward.

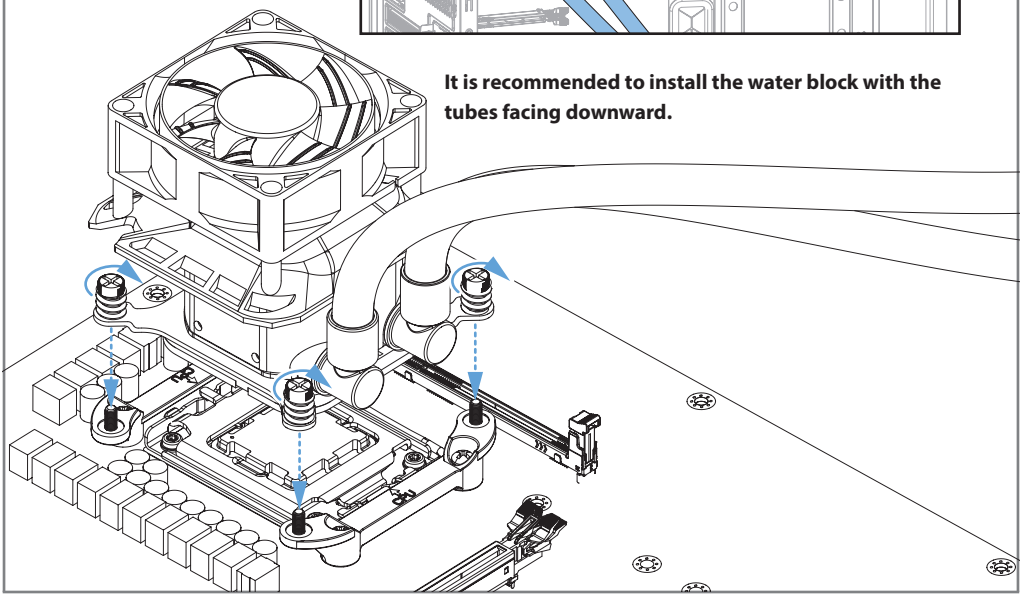

13. AMD - AM5 / AM4

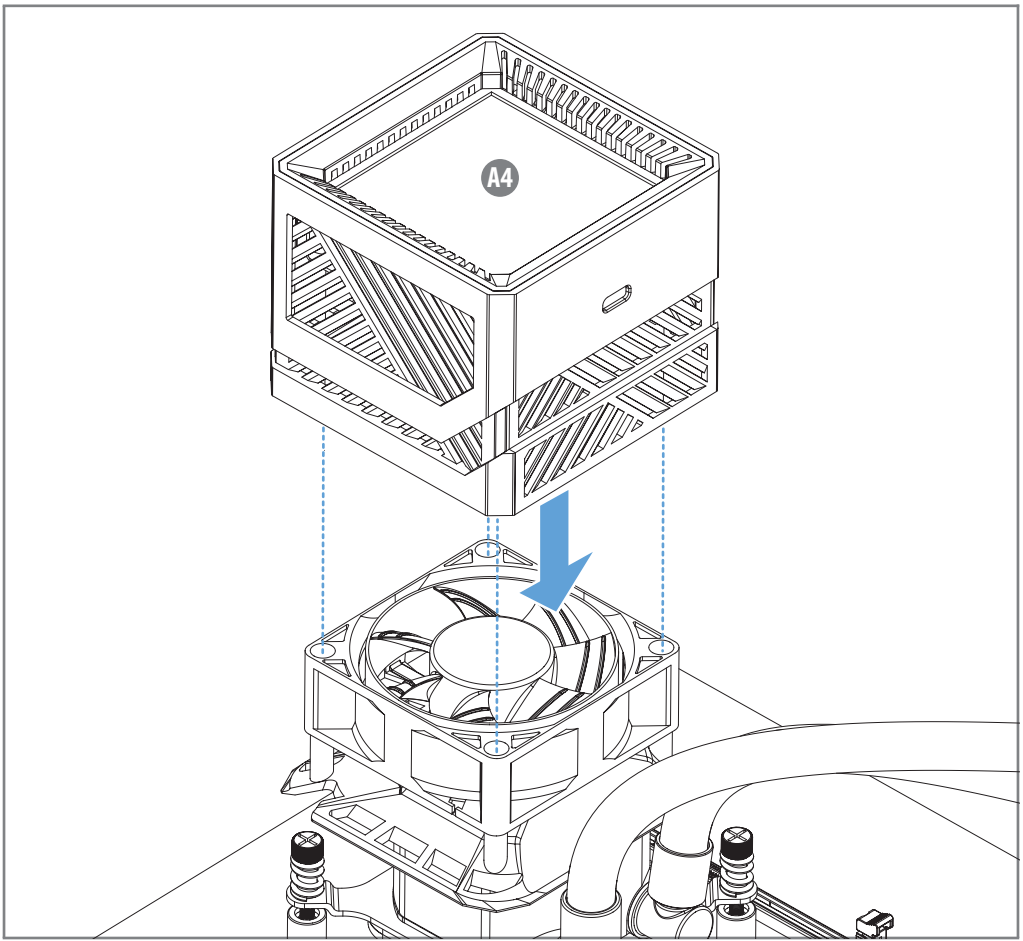

14. Cable Connection - Water Block

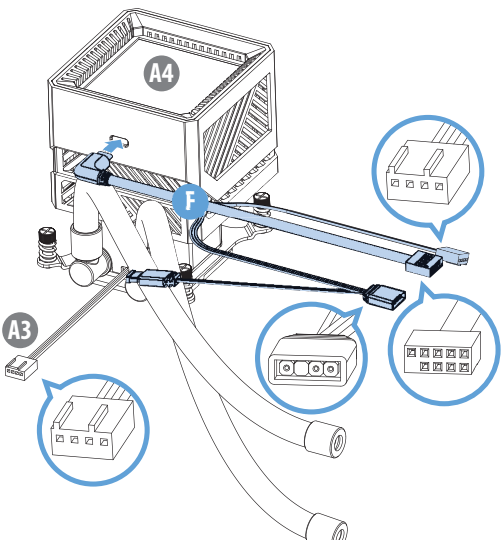

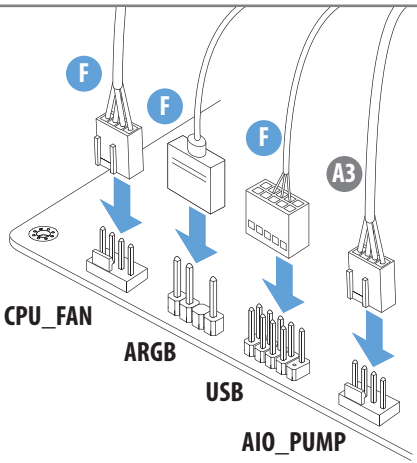

AIO pump header naming may vary by motherboard. Refer to the motherboard manual for the correct header location.

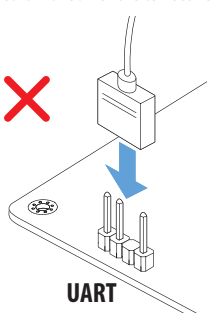

Please ensure to refer to the corresponding motherboard ARGB header location. Do not connect to the 3-pin UART header, which may appear similar.

15. Cable Connection - Radiator Fan

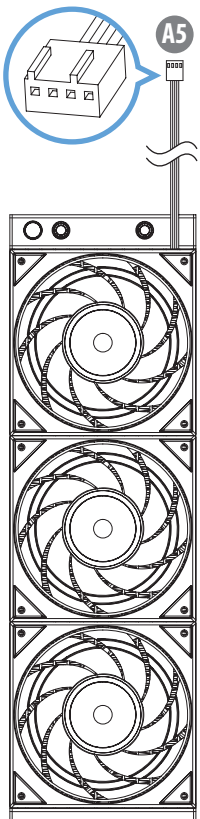

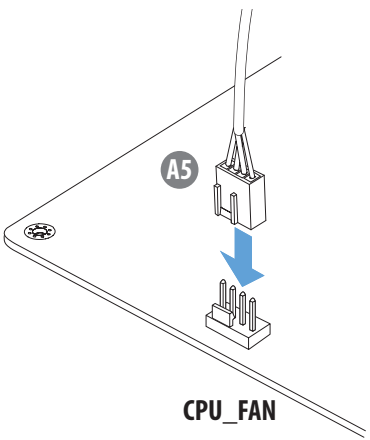

16. Intel & AMD

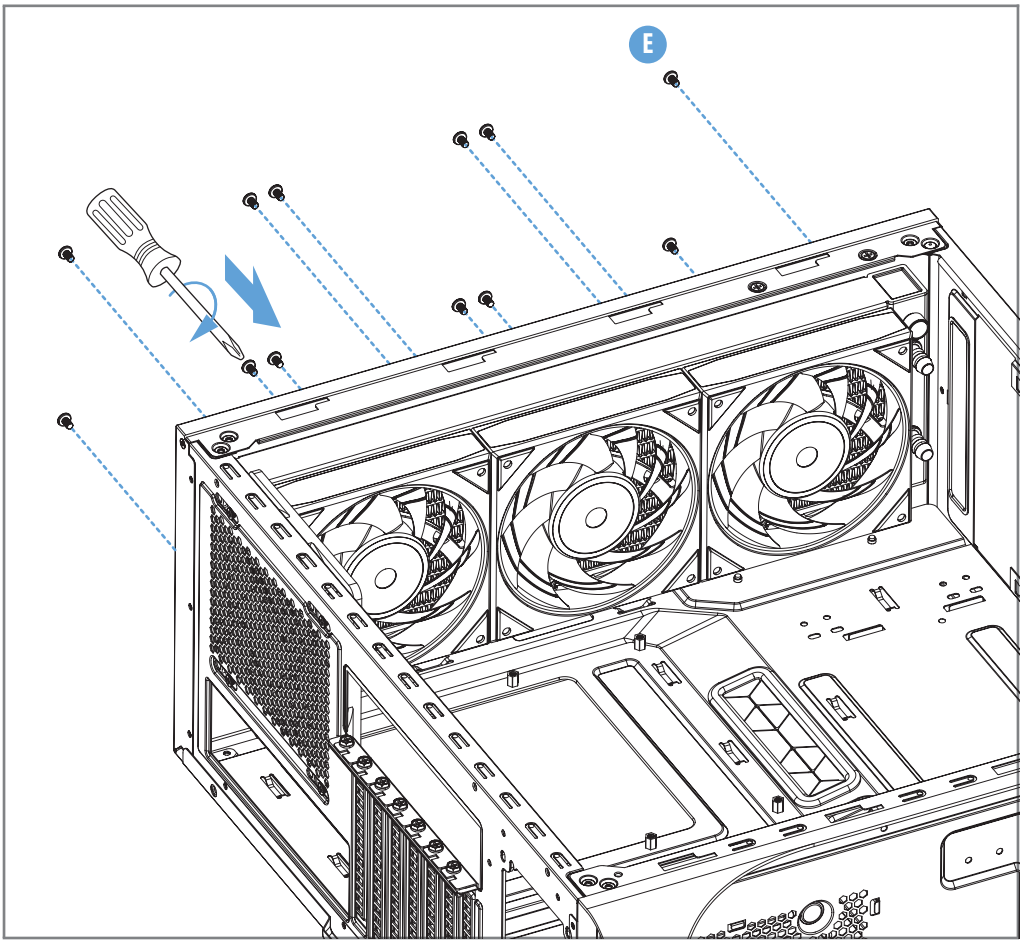

17. AIO Radiator Mounting Orientations

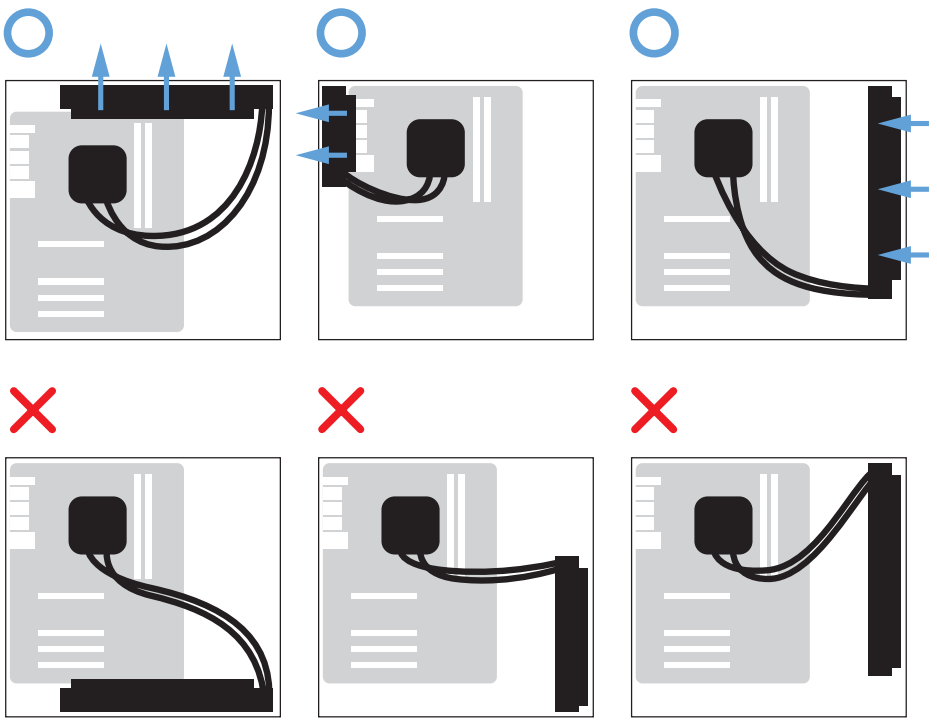

- **Depending on the chassis layout, install the AIO cooler based on available space and the recommended positioning guidelines.**
- **Set pump speed to 100% for 30–60 minutes during initial setup. This helps remove air bubbles from the water block to ensure quiet cooling.**

18. Intel & AMD

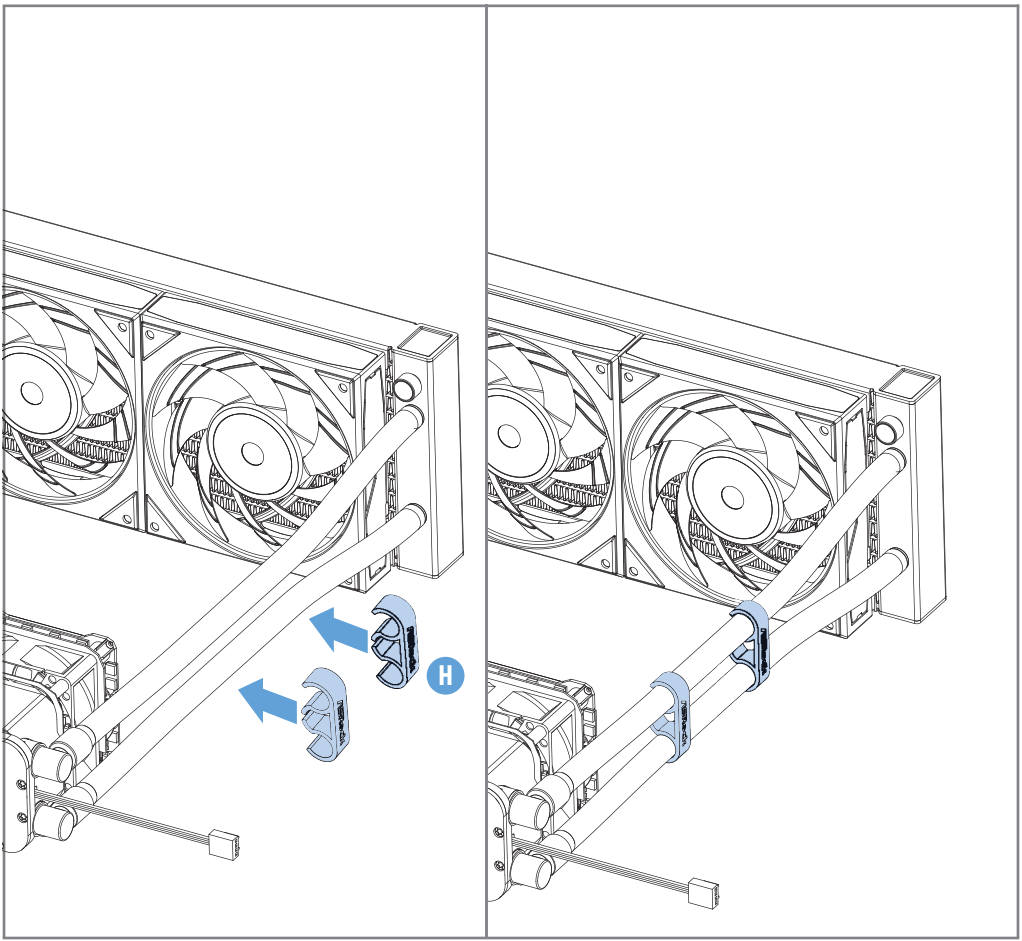

Download control software

Steuerungssoftware herunterladen / Téléchargement du logiciel de contrôle / Scarica il software di controllo / Scarica il software di controllo / Download do software de controle / Pobierz oprogramowanie sterujące / 制御ソフトウェアをダウンロード / 제어 소프트웨어 다운로드 / 下載控制軟體 / 下载控制软件

To download and install the control software, please visit the product support page at https://www.asrock.com/.

Um die Steuerungssoftware herunterzuladen und zu installieren, besuchen Sie bitte die Produkt-Support-Seite unter : https://www.asrock.com/.

Zur Herunterladung und Installation der Steuersoftware besuchen Sie bitte die Produktunterstützungsseite unter https://www.asrock.com/.

Per scaricare e installare il software di controllo, visitare la pagina di supporto del prodotto all'indirizzo https://www.asrock.com/.

Para descargar e instalar el software de control, visite la página de soporte del producto en https://www.asrock.com/.

Para efetuar o download e instalar o software de controle, acesse a página de suporte do produto em https://www.asrock.com/.

Aby pobrać i zainstalować oprogramowanie sterujące, odwiedź stronę wsparcia produktu pod adresem https://www.asrock.com/.

制御ソフトウェアをダウンロードしてインストールするには、https://www.asrock.com/ の製品サポートページにアクセスしてください。

제어 소프트웨어를 다운로드하여 설치하려면 제품 지원 웹페이지 https://www.asrock.com/ 을 방문하십시오 .

若要下載並安裝控制軟體，請造訪產品支援頁面 : https://www.asrock.com/。

如需下载并安装控制软件，请访问产品支持页面 : https://www.asrock.com/。

Warranty

Garantie / Garantie / Garanzia / Garanzia / Garantia / Gwarancja / 保証 / 보증 / 保固 / 保修

- This product is covered by a limited manufacturer's warranty provided by ASRock.
- ASRock reserves the right to interpret the terms and conditions of this warranty.
- For detailed warranty terms and service information, please visit: https://www.asrock.com/support.

- Für dieses Produkt gilt eine eingeschränkte Herstellergarantie von ASRock.
- ASRock behält sich das Recht vor, die Garantiebedingungen selbst auszulegen.
- Ausführliche Informationen zu Garantiebedingungen und Service finden Sie unter: https://www.asrock.com/support.

- Dieses Produkt ist durch eine eingeschränkte Herstellergarantie abgedeckt, die von ASRock bereitgestellt wird.
- ASRock behält sich das Recht vor, die Bedingungen dieser Garantie zu interpretieren.
- Weitere Informationen zu den Garantiebedingungen und Serviceleistungen finden Sie hier: https://www.asrock.com/support.

- Il prodotto è coperto da una garanzia limitata del produttore fornita da ASRock.
- ASRock si riserva il diritto di interpretare i termini e le condizioni di questa garanzia.
- Per informazioni dettagliate sui termini della garanzia e sul servizio, visitare il seguente indirizzo: https://www.asrock.com/support.

- Este producto está cubierto por una garantía limitada del fabricante proporcionada por ASRock.
- ASRock se reserva el derecho de interpretar los términos y condiciones de esta garantía.
- Para obtener información detallada sobre los términos de garantía y el servicio, visite: https://www.asrock.com/support.

- Este produto está coberto por uma garantia limitada do fabricante fornecida pela ASRock.
- A ASRock se reserva o direito de interpretar os termos e condições desta garantia.
- Para obter informações detalhadas sobre os termos de garantia e serviços, visite: https://www.asrock.com/support.

- Ten produkt jest objęty ograniczoną gwarancją producenta oferowaną przez ASRock.
- ASRock zastrzega sobie prawo do interpretacji warunków i zasad gwarancji.
- Aby uzyskać szczegółowe informacje o gwarancji i serwisie, odwiedź witrynę: https://www.asrock.com/support.

- 本製品は、ASRock が提供する限定的なメーカー保証の対象となります。
- ASRock は、本保証の条項および条件を解釈する権利を留保します。
- 保証の詳細な条件およびサービス情報については、 https://www.asrock.com/support をご覧ください。

- 이 제품에는 ASRock 에서 제공하는 제조업체의 제한적 보증이 적용됩니다 .
- ASRock 은 이 보증의 약관을 해석할 수 있는 권리를 보유합니다 .
- 자세한 보증 조건 및 서비스 정보는 웹사이트 https://www.asrock.com/support. 를 참조하십시오 .

- 本產品享有華擎提供的有限製造商保固。
- 華擎保留對保固條款與細則的解釋權。
- 如需保固條款與服務的詳細資訊，請造訪 : https://www.asrock.com/support.

- 本产品享有由 ASRock 提供的有限制造商保修。
- ASRock 保有对本保修条款与条件的最终解释权。
- 如需详细了解保修条款和服务信息，请访问 : https://www.asrock.com/support.

Regulatory Notices

FCC Compliance Statement



This device complies with part 15 of the FCC Rules. Operation is subject to the following two conditions:
(1) This device may not cause harmful interference, and
(2) This device must accept any interference received, including interference that may cause undesired operation.
This equipment has been tested and found to comply with the limits for a Class B digital device, pursuant to part 15 of the FCC Rules. These limits are designed to provide reasonable protection against harmful interference in a residential installation. This equipment generates, uses and can radiate radio frequency energy and, if not installed and used in accordance with the instructions, may cause harmful interference to radio communications. However, there is no guarantee that interference will not occur in a particular installation. If this equipment does cause harmful interference to radio or television reception, which can be determined by turning the equipment off and on, the user is encouraged to try to correct the interference by one or more of the following measures:

- Reorient or relocate the receiving antenna.
- Increase the separation between the equipment and receiver.
- Connect the equipment into an outlet on a circuit different from that to which the receiver is connected.
- Consult the dealer or an experienced radio/TV technician for help.

CE Conformity

ASRock INC. hereby declares that this device is in compliance with the essential requirements and other relevant provisions of related Directives. Full text of EU declaration of conformity is available at: http://www.asrock.com

ASRock follows the green design concept to design and manufacture our products, and makes sure that each stage of the product life cycle of ASRock product is in line with global environmental regulations. In addition, ASRock disclose the relevant information based on regulation requirements.

Please refer to https://www.asrock.com/general/about.asp?cat=Responsibility for information disclosure based on regulation requirements ASRock is complied with.

UKCA Conformity

ASRock INC. hereby declares that this device is in compliance with the essential requirements and other relevant provisions of related UKCA Directives. Full text of UKCA declaration of conformity is available at: http://www.asrock.com

Proper Disposal



DO NOT throw the motherboard in municipal waste. This product has been designed to enable proper reuse of parts and recycling. This symbol of the crossed out wheeled bin indicates that the product (electrical and electronic equipment) should not be placed in municipal waste. Check local regulations for disposal of electronic products.

China RoHS

电子信息产品污染控制标示

依据中国发布的「电子电气产品中限用物质的限量要求」及 SJ/T 11364-2024《电器电子产品有害物质限制使用标识要求》，电子信息产品应进行标示，藉以向消费者揭露产品中含有 的有毒有害物质或元素不致发生外泄或突变从而对环境造成污染或对人身、财产造成 严重损害的期限。依上述规定，您可于本产品之印刷电路板上看见图一之标示。图一 中之数字为产品之环保使用期限。由此可知此主板之环保使用期限为 10 年。



图一

产品中有害物质的名称及含有信息表

部件名称	有害物质或元素									
	铅 (Pb)	镉 (Cd)	汞 (Hg)	六价铬 (Cr(VI))	多溴联苯 (PBB)	多溴二苯醚 (PBDE)	邻苯二甲酸二 (2- 乙基) 己酯 (DEHP)	邻苯二甲酸丁基苄酯 (BBP)	邻苯二甲酸二正丁酯 (DBP)	邻苯二甲酸二异丁酯 (DIBP)
印刷电路板及电子组件	X	O	O	O	O	O	O	O	O	O
外部信号连接头及线材	X	O	O	O	O	O	O	O	O	O

以上表格依据 SJ/T 11364-2024 的规定编制。

注 1: O: 表示该有害物质在该部件所有均质材料中的含量均满足电器电子产品有害物质限制使用国家标准要求。

X: 表示该有害物质至少在该部件的某一均质材料中的含量不满足电器电子产品有害物质限制使用国家标准要求。

注 2: 以上未列出的部件 , 表明其有害物质含量均满足电器电子产品有害物质限制使用国家标准要求。

备注：此产品所标示之环保使用年限，系指在一般正常使用状况下。