TRYX

User Manual
Manuel d'utilisation
Manuale utente
Manual de usuario
Manual do utilizador
Benutzerhandbuch
Användarmanual
Gebruikershandleiding
Käyttöohje
Felhasználói kézikönyv
Instrukcja obsługi
Brukermanual
Brugervejledning
دليل المستخدم
사용 설명서
取扱説明書
说明书

PANORAMA

Package contents

Lieferumfang / Contenu de l'emballage / Contenuto della confezione / Contenido del paquete / Conteúdo da embalagem / Förpackningens innehåll / Inhoud van de verpakking / Pakkauksen sisältö / Csomag tartalma / Zawartość opakowania / Pakkeinnhold / Pakkeindhold / محتويات العبوة / 問梱物一覧 / 패키지 구성품 / 包装内容物 / 包裝內容物

For PANORAMA ARGB / Für PANORAMA ARGB / Pour PANORAMA ARGB / Per PANORAMA ARGB / Para PANORAMA ARGB / Para PANORAMA ARGB / För PANORAMA ARGB / Voor PANORAMA ARGB / PANORAMA ARGB:lle / PANORAMA ARGB-hez / Dla PANORAMA ARGB / For PANORAMA ARGB / Til PANORAMA ARGB / ARGB باناورما / PANORAMA ARGB 用 / 仅用于展域 ARGB / 僅適用於PANORAMA ARGB

For Intel 1851/1700

For Intel 1200/115X
For AMD

For Intel Core Ultra

For previous Intel CPUs & AMD

1 STEP

INTEL

2 STEP

1 STEP

AMD

2 STEP

3 STEP

4 STEP

5 STEP

FOR PANORAMA ARGB

Für PANORAMA ARGB / Pour PANORAMA ARGB / Per PANORAMA ARGB / Para PANORAMA ARGB / Para PANORAMA ARGB / För PANORAMA ARGB / Voor PANORAMA ARGB / PANORAMA ARGB:lle / PANORAMA ARGB-hez / Dla PANORAMA ARGB / For PANORAMA ARGB / Til PANORAMA ARGB / ARGB باناورما / PANORAMA ARGB 用 / 仅用于展域 ARGB / 僅適用於PANORAMA ARGB

TRYX Contact Information

TRYX Kontaktinformationen / Informations de contact TRYX / Informazioni di contatto TRYX / Información de contacto / Informações de contacto / TRYX Kontaktinformation / TRYX Contactinformatie / TRYX Yhteystiedot / TRYX Kapcsolat információk / Informacje kontaktowe TRYX / TRYX Kontaktinformasjon / TRYX Kontaktinformation / معلومات الاتصال بتراكس / TRYXお問い合わせ窓口 / TRYX 연락처 정보 / TRYX 聯絡方式 / TRYX 联系方式

Shanghai TRYX Technology Co., Ltd.
Unit 3A03, Building 1, Lane 1588, Shenchang Road, Minhang District, Shanghai city, China, 201107

https://www.tryx.com
info@tryx.com
csr@tryx.com

PRODUCT NAME	P/N
PANORAMA 360mm ARGB	L-P360A-AS3M-G1K L-P360A-AS3M-G1W
PANORAMA 240mm ARGB	L-P240A-AS2M-G1K L-P240A-AS2M-G1W
PANORAMA 360mm	L-P360N-DS3M-G1K L-P360N-DS3M-G1W
PANORAMA 240mm	L-P240N-DS2M-G1K L-P240N-DS2M-G1W

Download KANALI
下载KANALI

Support and FAQ
技术支持

PACKAGE CONTENTS

A 1 x AIO Cooler

B *2/3 ROTA PRO 120/140 FAN
OR
*2/3 ROTA ARGB 120/140 FAN
(Pre-installed)

C 1 x Intel Backplate

D 2 x AMD Adapter Brackets

E 1 x Fan Cable

F 1 x Thermal Grease

G 4 x AM4,Intel 1700 Thumbscrew Caps

H 4 x AM5,Intel 115X/1200 Thumbscrew Caps

I 8/12 x 30mm UNC 6-32 Fan Screws

J 8/12 x 8mm UNC 6-32 Radiator Screws

K 4 x LGA 115X/1200/1700 Standoff Screws

Only for ARGB Version

L 1 x ARGB Control Box

M 1 x Fan and ARGB Cable

N 1 x M/B Sync Cable

O 1 x USB Cable

INTEL

STEP 1

C K

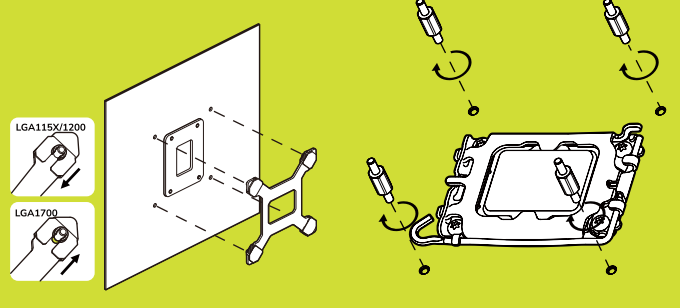

STEP 2

G For Intel 1700

H For Intel 115X/1200

K

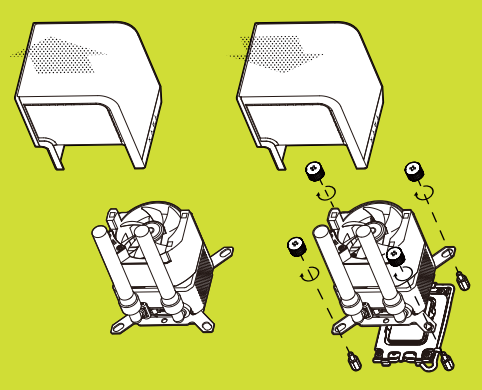

AMD

STEP 1

D X2

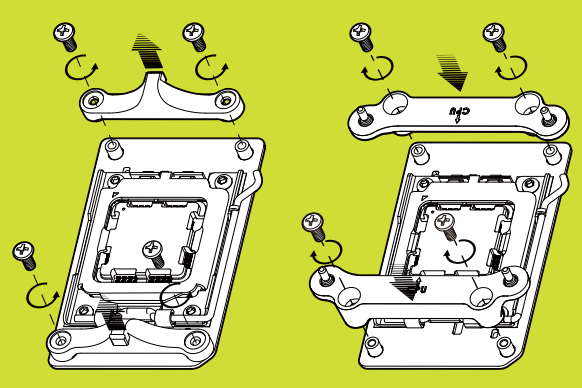

STEP 2

G For AMD AM4

H For AMD AM5

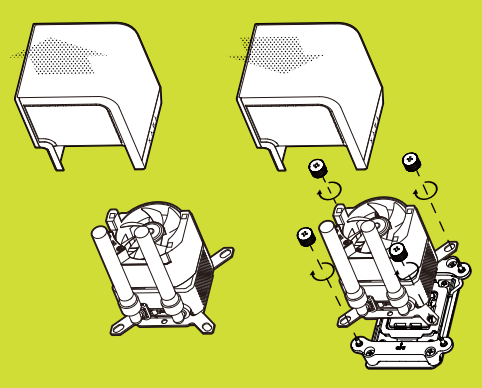

STEP 3

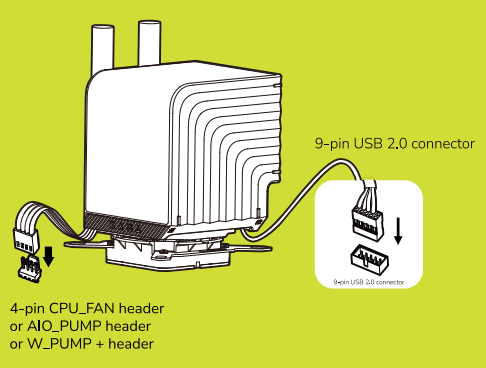

STEP 4

J

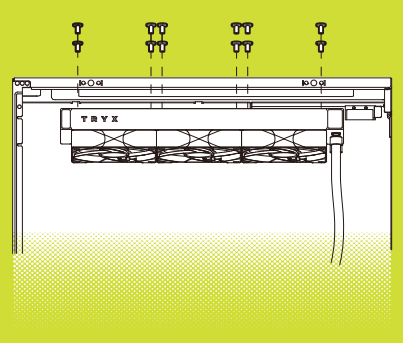

STEP 5

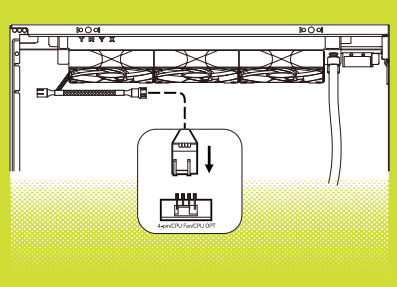

Only For ARGB Verison / 仅ARGB版本

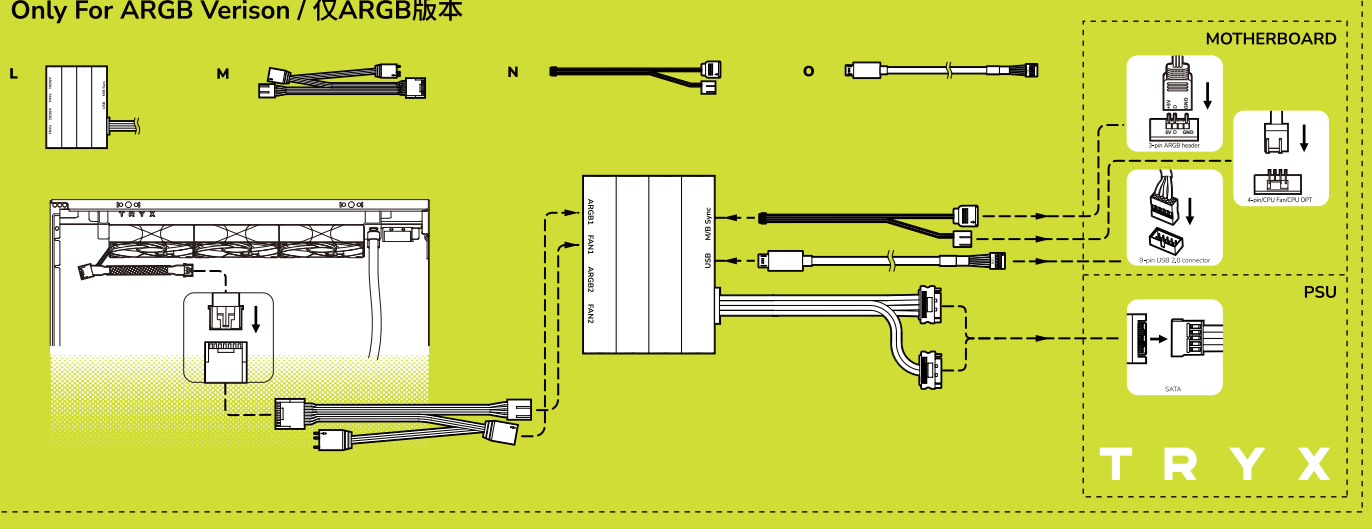

All products marked with this symbol are subject to the provisions of Directive 2012/19/EU on Waste Electrical and Electronic Equipment (WEEE) and must not be disposed of with unsorted household waste. Please check with your local authorities for proper disposal methods of electronic products.

FR Cet appareil et ses accessoires se recyclent
À DÉPOSER EN MAGASIN ou À DÉPOSER EN DÉCHÈTERIE
Points de collecte sur www.quefairedemesdechets.fr
Privilégiez la réparation ou le don de votre appareil !

MODEL NUMBER	PART NUMBER
PANORAMA 360mm ARGB	L-P360A-AS3M-G0K L-P360A-AS3M-G0W
PANORAMA 280mm ARGB	L-P280A-AS2M-G0K L-P280A-AS2M-G0W
PANORAMA 240mm ARGB	L-P240A-AS2M-G0K L-P240A-AS2M-G0W
PANORAMA 360mm	L-P360N-DS3M-G0K L-P360N-DS3M-G0W
PANORAMA 280mm	L-P280N-DS2M-G0K L-P280N-DS2M-G0W
PANORAMA 240mm	L-P240N-DS2M-G0K L-P240N-DS2M-G0W

Download KANALI
下载KANALI

Support and FAQ
技术支持

Safety Information

Keep the cooler and all components away from other liquids to avoid accidental spills that could cause electrical shorts.

Ensure that the liquid cooler and all related components are kept out of reach of children and pets. Small parts can be a choking hazard.

Warranty Duration

Liquid Cooler: 6-year limited warranty
Display Module: 2-year limited warraty

For detailed warranty regulations applicable in your country/region, please visit our official website at https://www.tryxzone.com. Warranty terms may vary by region.

TRYX Contact Information
Shanghai TRYX Technology Co., Ltd.

Unit 3A03, Building 1, Lane 1588, Shenchang Road, Minhang District, Shanghai city, China, 201107

https://www.tryxzone.com
info@tryxzone.com

User Manual
PANORAMA