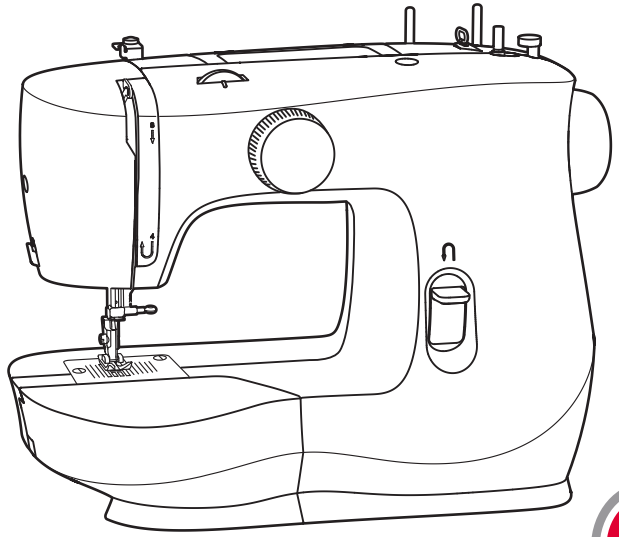

SINGER®

M2100 / M2105 Instruction Manual

This household sewing machine is designed to comply with IEC/EN 60335-2-28 and UL1594.

IMPORTANT SAFETY INSTRUCTIONS

When using an electrical appliance, basic safety precautions should always be followed, including the following:

Read all instructions before using this household sewing machine. Keep the instructions at a suitable place close to the machine. Make sure to hand them over if the machine is given to a third party.

DANGER - To reduce the risk of electric shock:

- A sewing machine should never be left unattended when plugged in. The electrical socket, to which the machine is plugged in should be easily accessible. Always unplug this sewing machine from the electric outlet immediately after using and before cleaning, removing covers, lubricating or when making any other user servicing adjustments mentioned in the instruction manual.

WARNING - To reduce the risk of burns, fire, electric shock, or injury to person:

- Do not allow to be used as a toy. Close attention is necessary when this sewing machine is used by or near children.
- Use this sewing machine only for its intended use as described in this manual. Use only

attachments recommended by the manufacturer as contained in this manual.

- Never operate this sewing machine if it has a damaged cord or plug, if it is not working properly, if it has been dropped or damaged, or dropped into water. Return the sewing machine to the nearest authorized dealer or service center for examination, repair, electrical or mechanical adjustment.
- Never operate the sewing machine with any air openings blocked. Keep ventilation openings of the sewing machine and foot control free from the accumulation of lint, dust, and loose cloth.
- Keep fingers away from all moving parts.Special care is required around the sewing machine needle.
- Always use the proper needle plate. The wrong plate can cause the needle to break.
- Do not use bent needles.
- Do not pull or push fabric while stitching. It may deflect the needle causing it to break.
- Wear safety glasses.
- Switch the sewing machine off (“0”) when making any adjustment in the needle area, such as threading needle, changing needle, threading bobbin, or changing presser foot, etc.
- Never drop or insert any object into any opening.
- Do not use outdoors.
- Do not operate where aerosol (spray) products are being used or where oxygen is being administrated.
- To disconnect, turn all controls to the off (“0”) position, then remove plug from outlet.
- Do not unplug by pulling on cord. To unplug, grasp the plug, not the cord.
- The foot control is used to operate the machine. Never place other objects on the foot control.

- Do not use the machine if it is wet.
- If the LED lamp is damaged or broken, it must be replaced by the manufacturer or its service agent or a similarly qualified person, in order to avoid a hazard.
- If the cord connected with the foot control is damaged, it must be replaced by the manufacturer or its service agent or a similarly qualified person, in order to avoid a hazard.
- This sewing machine is provided with double insulation. Use only identical replacement parts. See instructions for Servicing of Double-Insulated Appliances.

SAVE THESE INSTRUCTIONS

FOR CENELEC COUNTRIES ONLY:

This appliance can be used by children aged from 8 years and above and persons with reduced physical, sensory or mental capabilities or lack of experience and knowledge if they have been given supervision or instruction concerning use of the appliance in a safe way and understand the hazards involved. Children shall not play with the appliance. Cleaning and user maintenance shall not be made by children without supervision.

The noise level under normal operating conditions is less than 75dB(A).

The machine must only be used with foot control of type FC-2902D, (220-240V) manufactured by Zhejiang Founder Motor Corporation, LTD. (Vietnam) / 4C-326G (230V) / 4C-336G (240V) manufactured by Wakaho Electric Ind. Co., Ltd. (Vietnam).

FOR NON CENELEC COUNTRIES:

This sewing machine is not intended for use by persons (including children) with reduced physical, sensory or mental capabilities, or lack of experience and knowledge, unless they have been given supervision or instruction concerning use of the sewing machine by a person responsible for their safety. Children should be supervised to ensure that they do not play with the sewing machine.

The noise level under normal operating conditions is less than 75dB(A).

The machine must only be used with foot control of type KD-1902, FC-1902 (110-120V) / KD-2902, FC-2902A, FC-2902C, FC-2902D, (220-240V) manufactured by Zhejiang Founder Motor Corporation, LTD. (Vietnam) / 4C-316B (110-125V) / 4C-316C (127V) /4C-326C (220V) / 4C-326G (230V) / 4C-336G (240V) manufactured by Wakaho Electric Ind. Co., Ltd. (Vietnam).

SERVICING OF DOUBLE INSULATED PRODUCTS

In a double-insulated product, two systems of insulation are provided instead of grounding. No ground means is provided on a double-insulated product, nor should a means for grounding be added to the product. Servicing of a double-insulated product requires extreme care and knowledge of the system and should be done only by qualified service personnel. Replacement parts for a double-insulated product must be identical to those parts in the product. A double-insulated product is marked with the words ‘DOUBLE INSULATION’ or ‘DOUBLE INSULATED’.

☐ List of contents

Machine Basics

Principal Parts of the Machine 1
Connecting Machine to Power Source 3
Two Step Presser Foot Lifter 4
Accessories 5

Threading the Machine

Winding the Bobbin 6
Inserting the Bobbin 7
Threading the Upper Thread 8
Raising the Bobbin Thread 9
Thread Tension 10

Sewing

How to Choose Your Pattern 11
Sewing Straight Stitch 12
Reverse Sewing 13
Removing the Work 13
Cutting the Thread 13
Blind Hem 14
Buttonholes 15
Sewing on Buttons 16
Zippers and Piping 17
Free Motion Darning, Stippling 18

General Information

Installing the Removable Extension Table 19
Changing the Presser Foot 20
Needle/ Fabric/ Thread Chart 21
Darning Plate 22

Maintenance and Troubleshooting

Inserting the Needle 23
Maintenance 24
Troubleshooting Guide 25

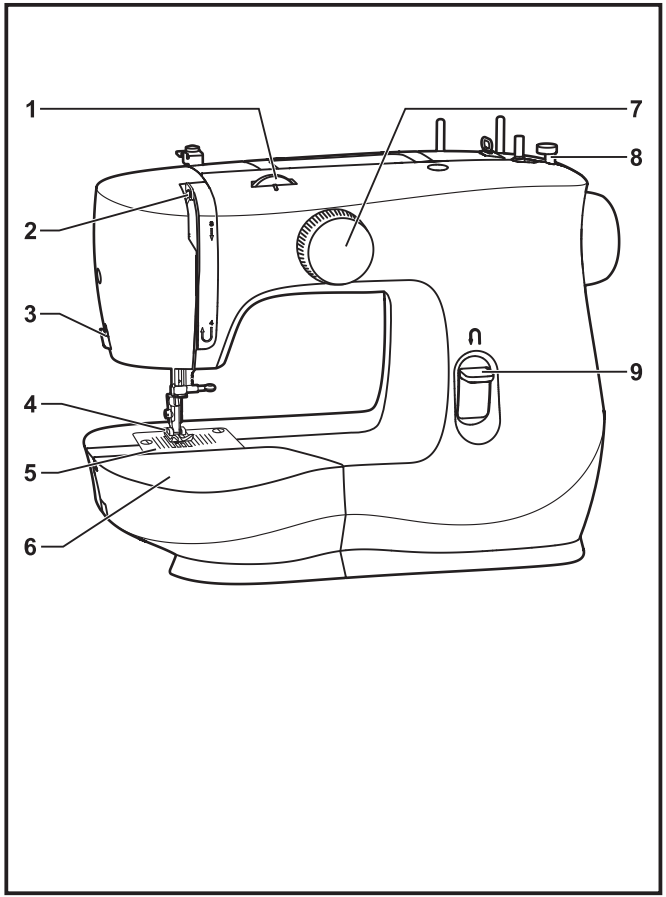

☐ Principal Parts of the Machine

1. Thread tension dial
2. Thread take-up lever
3. Thread cutter
4. Presser foot
5. Needle plate
6. Removable extension table/ accessory storage
7. Pattern selector dial
8. Bobbin winding stopper
9. Reverse sewing lever

Unpacking

- Place the box on a steady, flat surface. Lift your machine out of the box and remove the outer packaging.
- Remove all other packing material and the plastic bag.

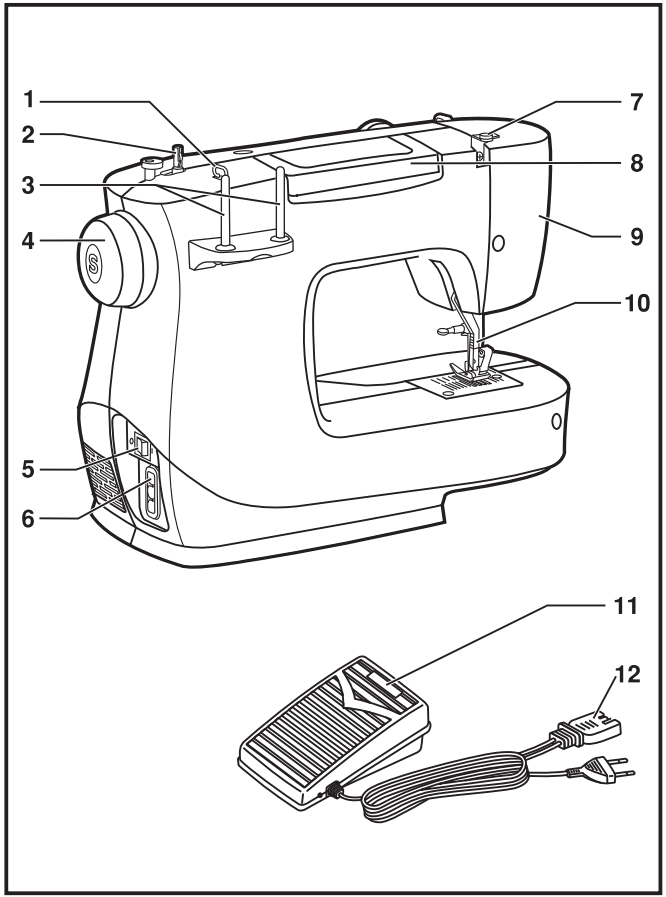

☐ Principal Parts of the Machine

1. Thread guide
2. Bobbin winder spindle
3. Spool pin
4. Handwheel
5. Power and light switch
6. Main plug socket
7. Bobbin thread guide
8. Handle
9. Face plate
10. Presser foot lifter
11. Foot speed control
12. Power cord

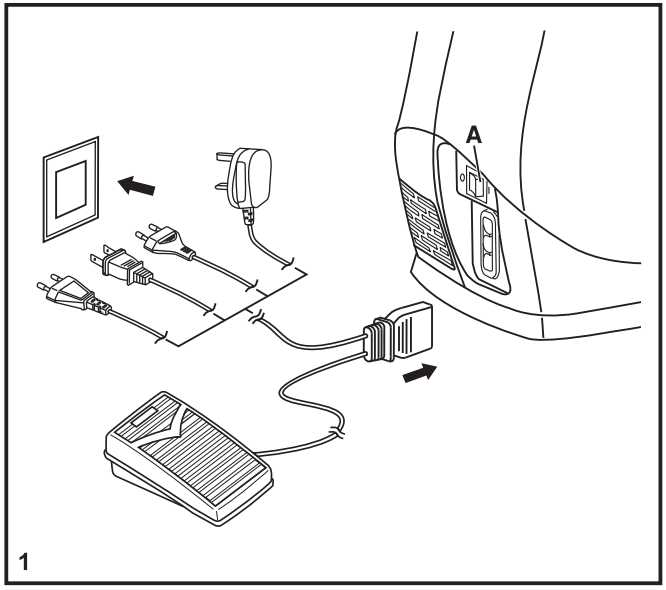

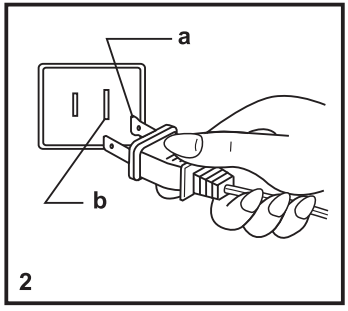

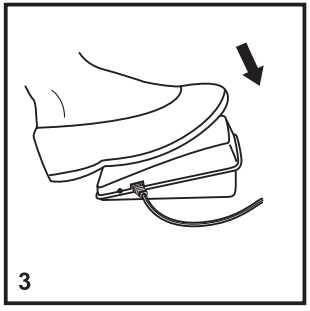

☐ Connecting Machine to Power Source

Connect the machine to a power source as illustrated. (1)
This appliance is equipped with a polarized plug which must be used with the appropriate polarized outlet. (2)

Attention:
Unplug power cord when machine is not in use.

Foot control
The foot control pedal regulates the sewing speed. (3)

Attention:
Consult a qualified electrician if in doubt of how to connect machine to power source.

Sewing light
Press main switch (A) to " I " for power and light.

IMPORTANT NOTICE
For appliance with a polarized plug (one blade is wider than the other). To reduce the risk of electric shock, this plug is intended to fit in a polarized outlet only one way. If it does not fit fully in the outlet, reverse the plug. If it still does not fit, contact a qualified electrician to install the proper outlet. Do not modify the plug in any way.

a. Polarized attachment plug
b. Conductor intended to be grounded

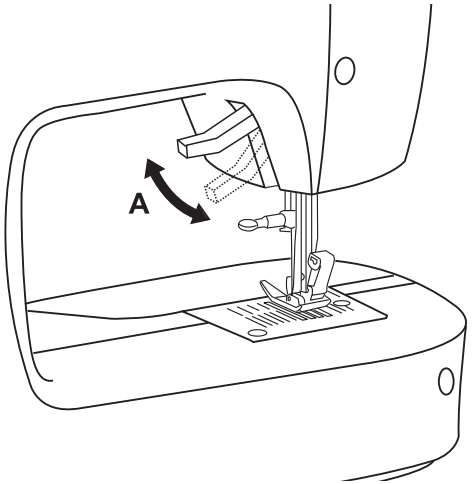

☐ Two Step Presser Foot Lifter

When sewing several layers or thick fabrics, the presser foot can be raised to a higher position for easy positioning of the work. (A)

Attention:
Your SINGER® machine is adjusted to provide the best stitch result at normal room temperature. Extreme hot and cold temperatures can affect the sewn result.

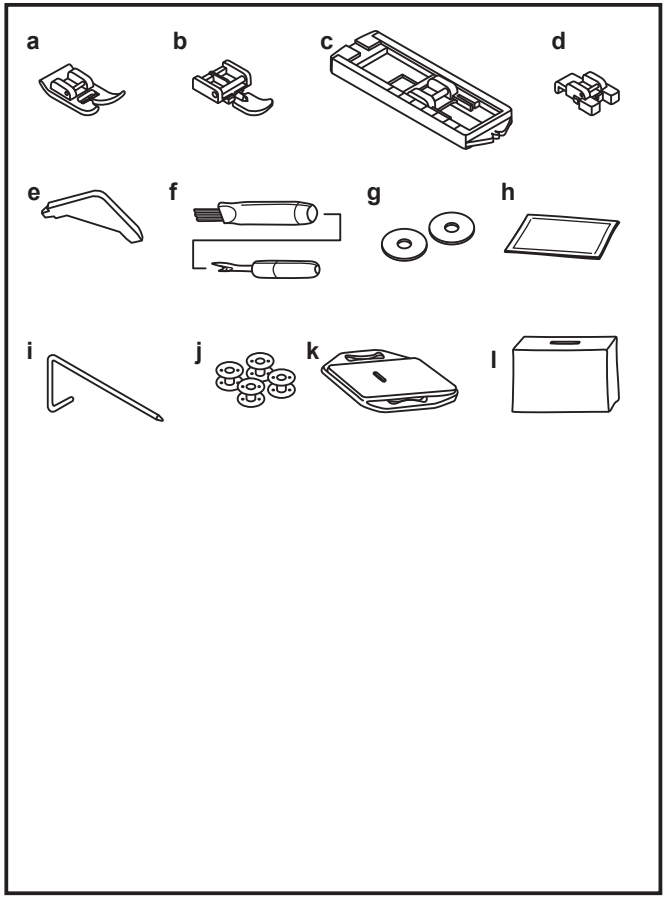

☐ Accessories

Standard accessories

a. All purpose foot
b. Zipper foot
c. Buttonhole foot
d. Button sewing foot
e. L-screwdriver
f. Seam ripper/ brush
g. Spool pin felt (2x)
h. Pack of needles (3x)
i. Edge/ quilting guide
j. SINGER® Class 15 bobbins (4x)
k. Darning plate
l. Soft cover

Optional Accessories:

For information about additional presser feet, attachments and accessories that may be available for your machine, visit www.singer.com.

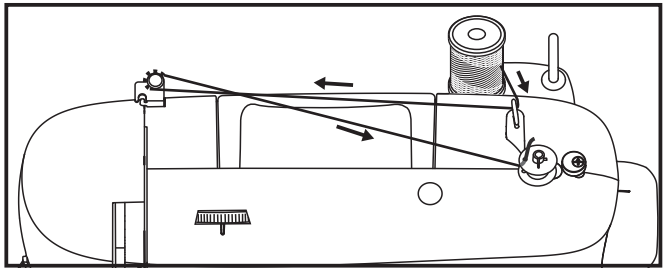

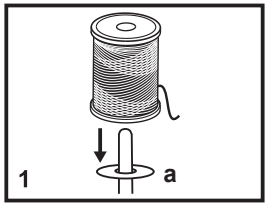

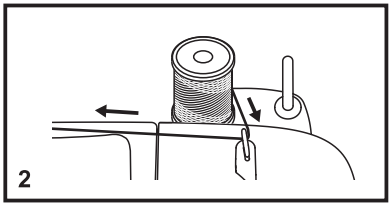

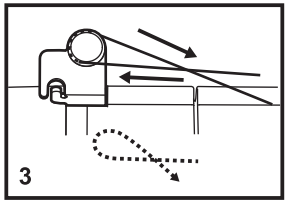

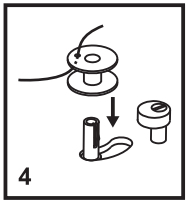

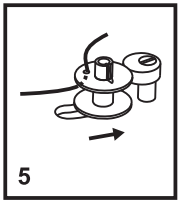

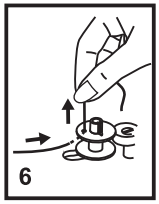

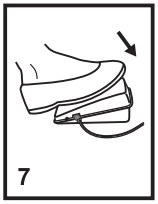

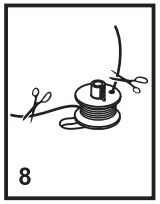



☐ Winding the Bobbin

- Place the thread and spool pin felt (a) onto the spool pin. (1)
- Draw the thread from the spool through the upper thread guide. (2)
- Wind the thread clockwise around bobbin winder tension discs. (3)
- Thread bobbin as illustrated and place on spindle. (4)
- Push bobbin spindle to right. (5)
- Hold thread end. (6)
- Step on foot control pedal. (7)
- Release the pedal after a few turns. Release the thread and cut as close as possible to the spool. Press the pedal again. Once the spool is full, it rotates slowly. Release the pedal and cut thread. (8)
- Push bobbin spindle to left (9) and remove.

Please Note:
When the bobbin winder spindle is in “bobbin winding” position, the machine will not sew and the hand wheel will not turn. To start sewing, push the bobbin winder spindle to the left (sewing position).

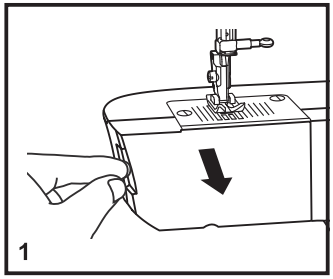

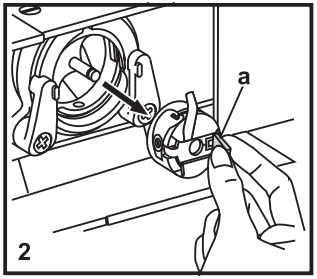

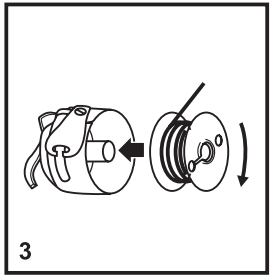

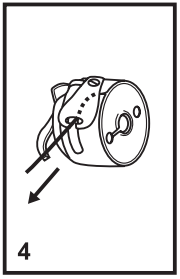



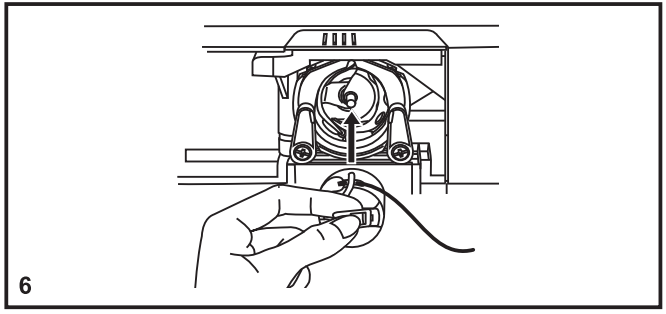

☐ Inserting the Bobbin

When inserting or removing the bobbin, the needle must be fully raised.

- Open the hinged cover. (1)
- Pull the bobbin case tab (a) and remove the bobbin case. (2)
- Hold the bobbin case with one hand. Insert the bobbin so that the thread runs in a clockwise direction (arrow). (3)
- Pull the thread through the slit and under the finger. Leave a 6 inch tail of thread. (4)
- Hold the bobbin case by the hinged latch. (5)
- Insert it into the shuttle. (6)

Attention:
Turn power switch to off (“O”) before inserting or removing the bobbin.

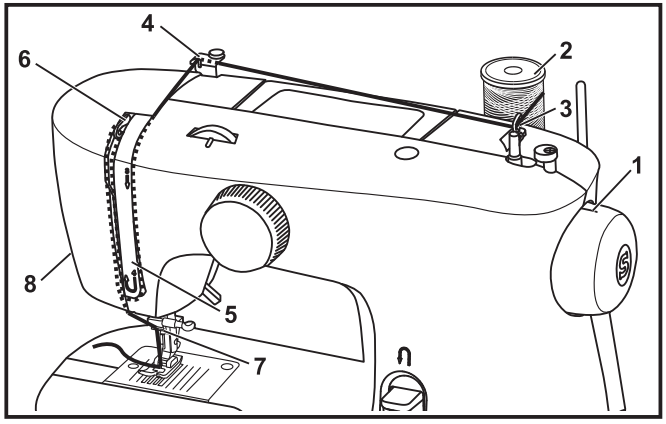

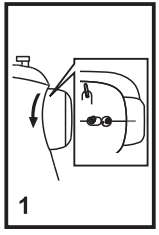

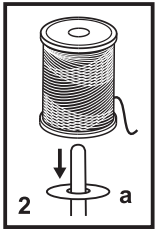

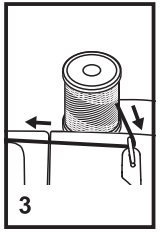

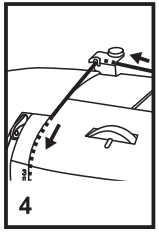

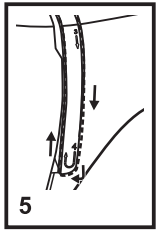

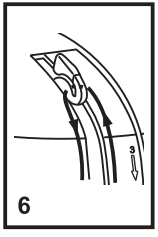

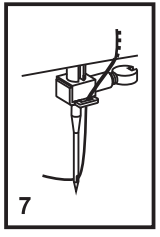

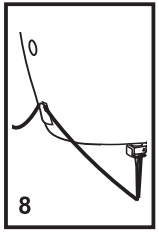

☐ Threading the Upper Thread

This is a simple operation but it is important to carry out correctly as by not doing so several sewing problems could result.

- Raise the needle to its highest position by turning the handwheel towards you (counterclockwise) so that the mark on the handwheel points directly up. Raise the presser foot to release the tension discs. (1)
- Place the thread and spool pin felt (a) onto the spool pin. (2)

  Note: For safety, it is strongly suggested you turn off the power before threading.
- Draw the thread from the spool through the upper thread guide. (3)
- Guide the thread around the thread guide as illustrated. (4)
- Thread tension module by leading thread down right channel and up left channel. (5) During this process it is helpful to hold the thread between the spool and thread guide.
- At the top of this movement pass thread from right to left through the slotted eye of the take-up lever and then downwards again. (6)
- Now pass thread behind the thin wire needle clamp guide (7) and then down to the needle which should be threaded from front to back.
- Pull about 6-8 inches of thread to the rear beyond the needle eye. Trim thread to length with built in thread cutter. (8)

☐ Raising the Bobbin Thread

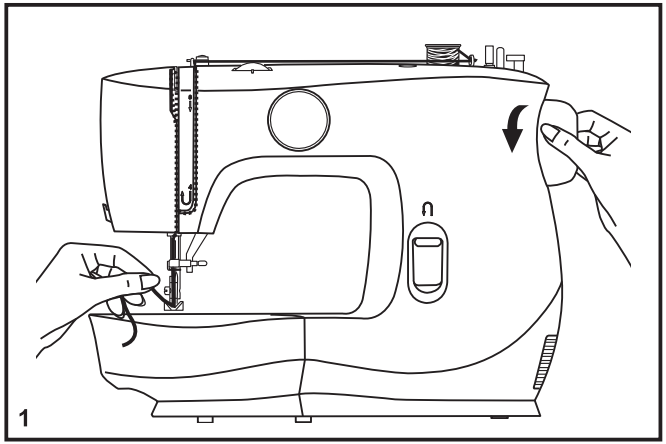

Hold the upper thread with the left hand. (1)

Turn the handwheel towards you (counterclockwise) lowering, then raising needle.

Note:
If it is difficult to raise the bobbin thread, check to make sure the thread is not trapped by the hinged cover or the Removable Extension Table.

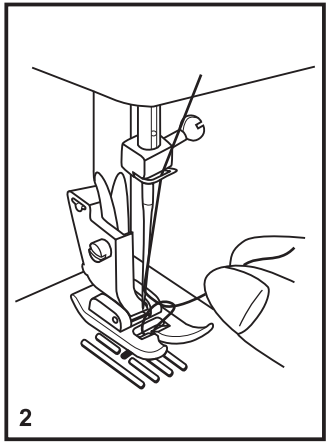

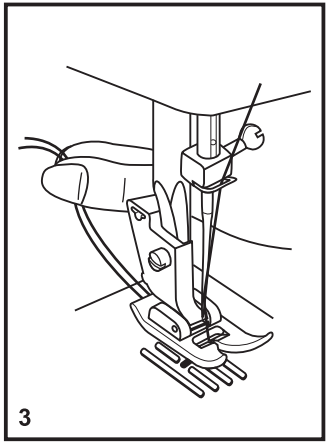

Gently pull on the upper thread to bring the bobbin thread up through the needle plate hole. (2)

Lay both threads to the back under the presser foot. (3)

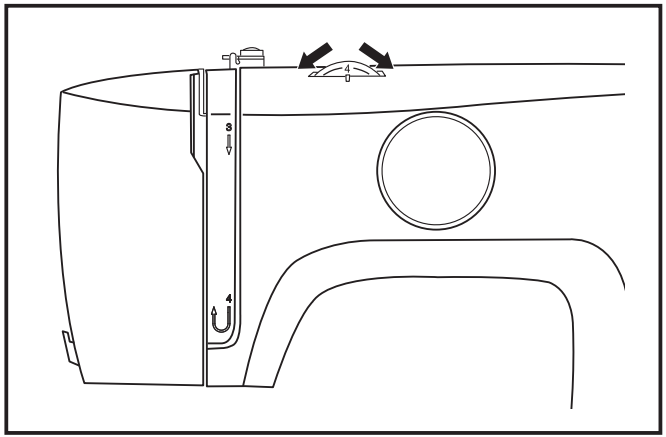

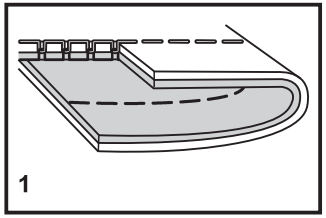

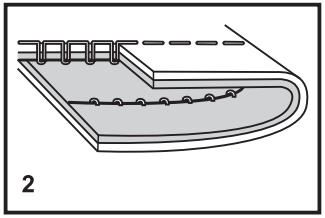

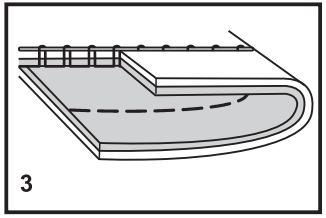

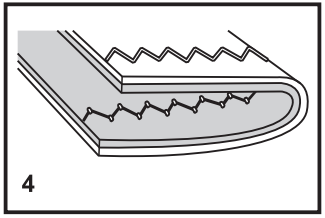

☐ Thread Tension

Upper thread tension

Basic thread tension setting: “4”.

To increase the tension, turn the dial to the next number up.

To reduce the tension, turn the dial to the next number down.

1. Normal thread tension for straight stitch sewing.
2. Thread tension too loose for straight stitch sewing. Turn dial to higher number.
3. Thread tension too tight for straight stitch sewing. Turn dial to lower number.
4. Normal thread tension for zig zag and decorative sewing. Correct thread tension is when a small amount of the upper thread appears on the bottom side of fabric.

Lower thread tension

The bobbin tension has been set correctly at the factory, so you do not need to adjust it.

Please note:

- Proper setting of tension is important to good sewing.
- There is no single tension setting appropriate for all stitch functions, thread or fabric.
- A balanced tension (identical stitches both top and bottom) is usually only desirable for straight stitch construction sewing.
- 90% of all sewing will be between ”3” and ”5”.
- For zig zag and decorative sewing stitch functions, thread tension should generally be less than for straight stitch sewing.
- For all decorative sewing you will always obtain a nicer stitch and less fabric puckering when the upper thread appears on the bottom side of your fabric.

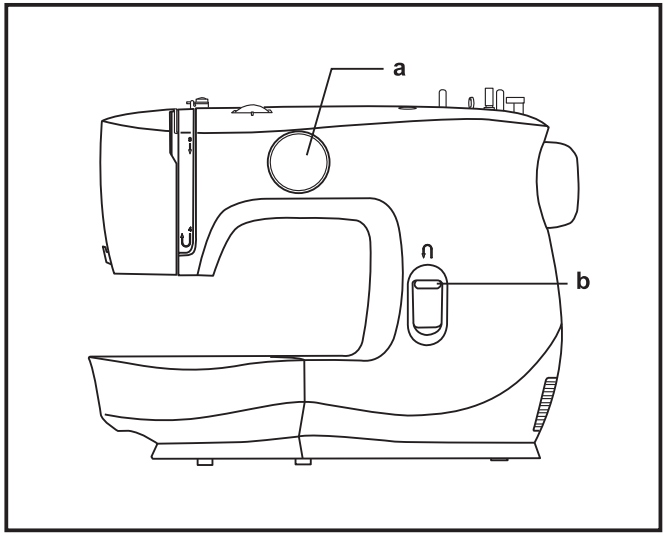

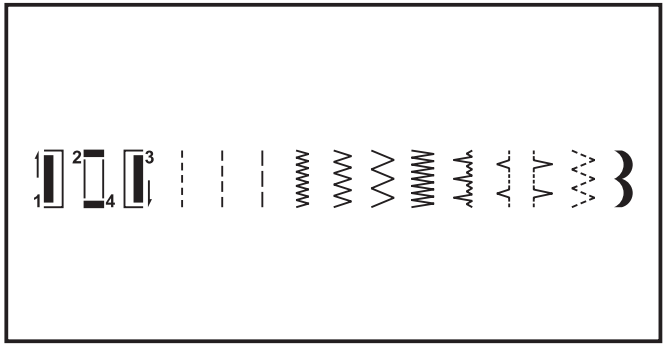

☐ How to Choose Your Pattern

To select a stitch, simply turn the pattern selector dial. The pattern selector dial may be turned in either direction.

For straight stitch, select pattern " " with the pattern selector dial.

For zigzag stitch, select pattern " " with the pattern selector dial.

a. Pattern Selector Dial
b. Reverse Sewing Lever

☐ Sewing Straight Stitch

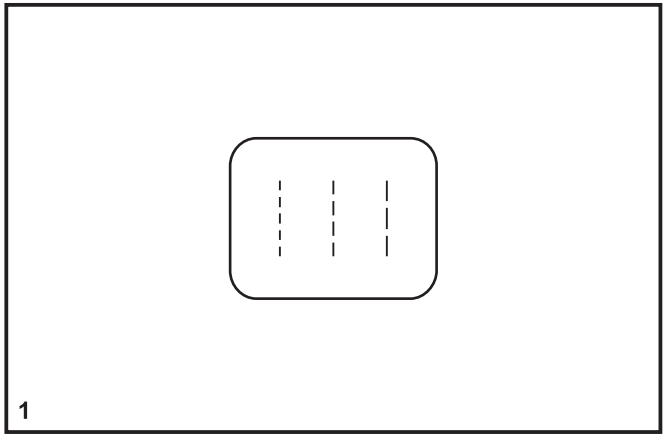

1

To begin sewing, set the machine for straight stitch. (1)

Place the fabric under the presser foot with the fabric edge lined up with the desired seam guide line on the needle plate. (2)

Lower the presser foot lifter, and then step on the foot control to start sewing. (3)

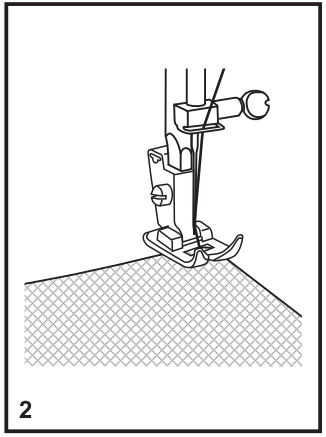

2

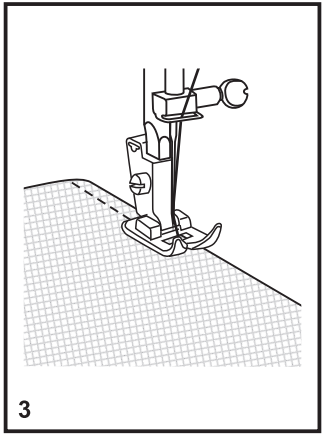

3

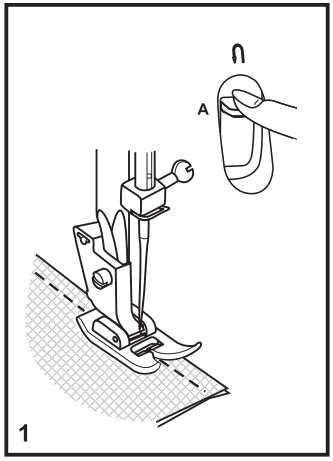

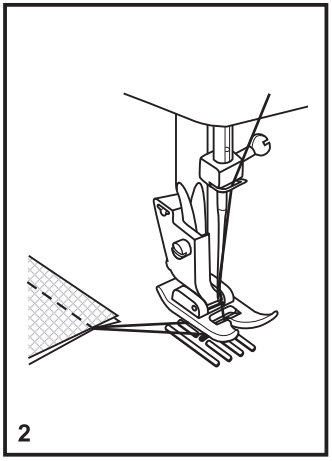

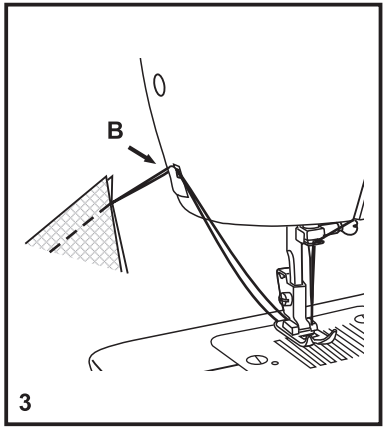

☐ Reverse Sewing

To secure the beginning and the end of a seam, press down the reverse sewing lever (A). Sew a few reverse stitches. Release the lever and the machine will sew forward again. (1)

☐ Removing the Work

Turn the handwheel toward you (counterclockwise) to bring the thread take up lever to its highest position and the needle begins to descend, raise the presser foot and remove work behind the needle and presser foot. (2)

☐ Cutting the Thread

Pull the threads under and behind the presser foot. Guide the threads to the side of the face plate and into thread cutter (B). Pull threads down to cut. (3)

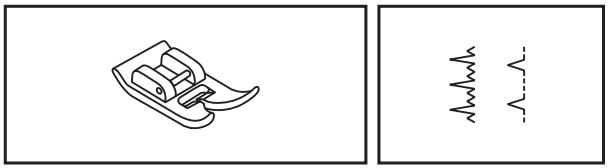

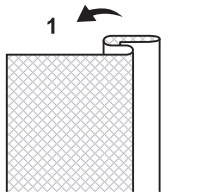

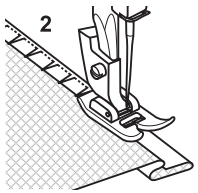

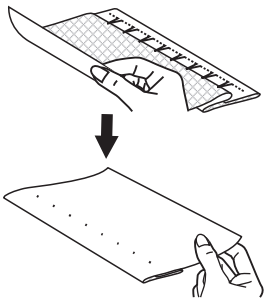

☐ Blind Hem

For hems on curtains, trousers, skirts, etc.

Blind hem for stretch fabrics.

Blind hem for firm fabrics.

Note:
It takes practice to sew blind hems. Always make a sewing test first.

Blind Hem:

Turn up the hem to the desired width and press. Fold back (as shown in Fig. 1) against the right side of the fabric with the top edge of the hem extending about 7 mm. (1/4") to the right side of the folded fabric.

Start to sew slowly on the fold, making sure the needle touches slightly the folded top to catch one or two fabric threads. (2)

Unfold the fabric when hemming is completed and press.

Note:
To make blind hem sewing even easier, use a blind hem foot, available from your SINGER® retailer.

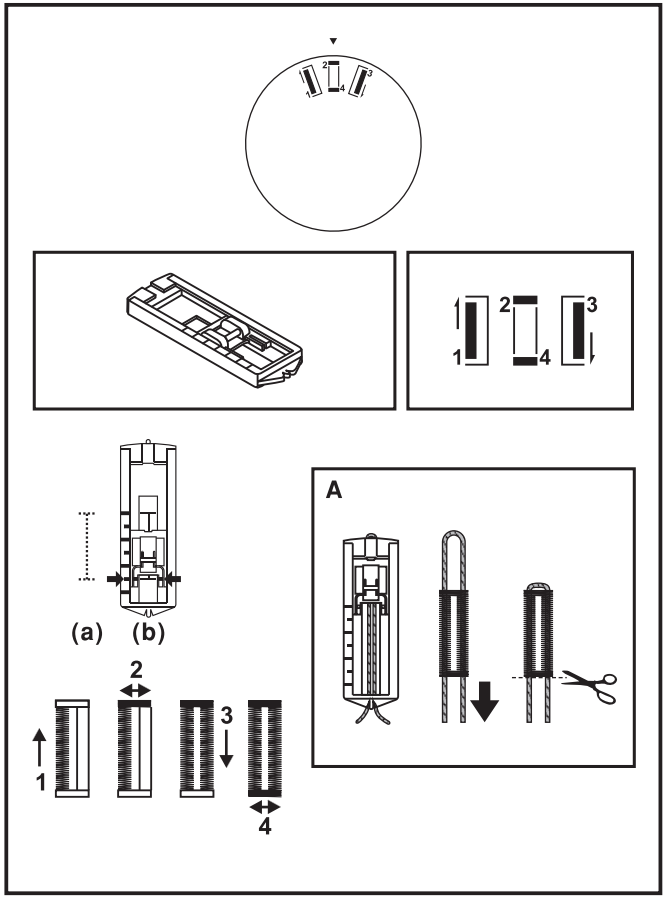

☐ Buttonholes

Prepare

1. Take off the all purpose foot and attach the buttonhole foot.
2. Measure diameter and thickness of button and add 0.3 cm (1/8”) for bar tacks to obtain correct buttonhole length; mark buttonhole length on fabric (a).
3. Place fabric under the foot, so that marking on the buttonhole foot aligns with starting marking on fabric. Lower the foot, so that the buttonhole center line marked on the fabric aligns with the center of the buttonhole foot (b).

Note:
Density varies according to the fabric.
Always test sew a buttonhole on the fabric you are using to sew the buttonhole.

Follow the 4-step sequence changing from one step to another with the Pattern Selector Dial. When moving from step to step through the buttonhole process, be sure that the needle is raised before turning the Pattern Selector Dial to the next step. Take care not to sew too many stitches in steps 2 and 4. Use seam ripper and cut buttonhole open from both ends towards the middle.

Tips:

- Slightly reducing upper thread tension will produce better results.
- Use a stabilizer for fine or stretchy fabrics.
- It is advisable to use heavy thread or cord for stretch or knit fabrics. The zig-zag should sew over the heavy thread or cord. (A)

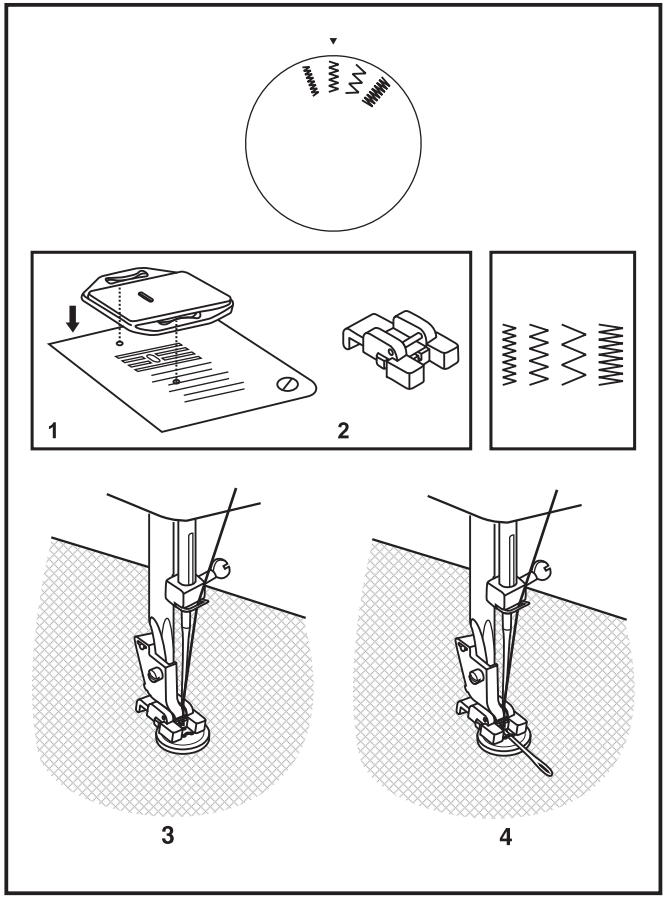

☐ Sewing on Buttons

Install the darning plate. (1)

Change the all purpose foot to the button sewing foot. (2)

Position the work under the foot.

Place the button in the desired position and lower the foot.

Set the Pattern Selector Dial for the second zig-zag pattern (as shown), which should correspond to the distance between the two holes of the button. Turn the handwheel toward you to check if the needle goes into the right and left hole of the button without hitting the button. Slowly sew on the button with about 10 stitches. (3)

Bring the thread tails to the back of the work, then tie off manually.

If a shank is required, place a darning needle on top of the button and sew. (4)

For buttons with 4 holes, sew through the front two holes first, push the work forward and then sew through the back two holes.

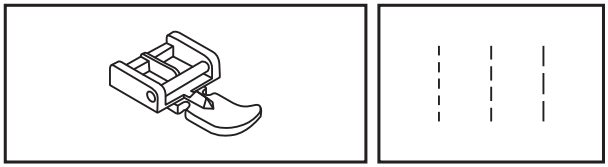

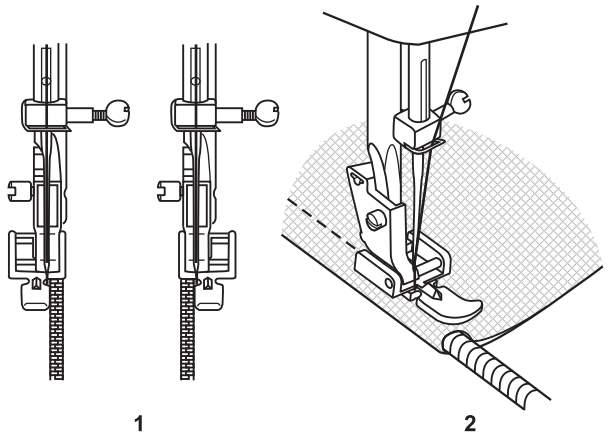

☐ Zippers and Piping

Set the machine as illustrated.

Change to zipper foot.

The zipper foot can be attached right or left, depending on which side of the foot you are going to sew. (1)

To sew past the zipper tab, lower the needle into the fabric, raise the presser foot and push the zipper tab behind the presser foot. Lower the foot and continue to sew.

It is also possible to sew a length of cord into a bias strip to form a "welt" or piping. (2)

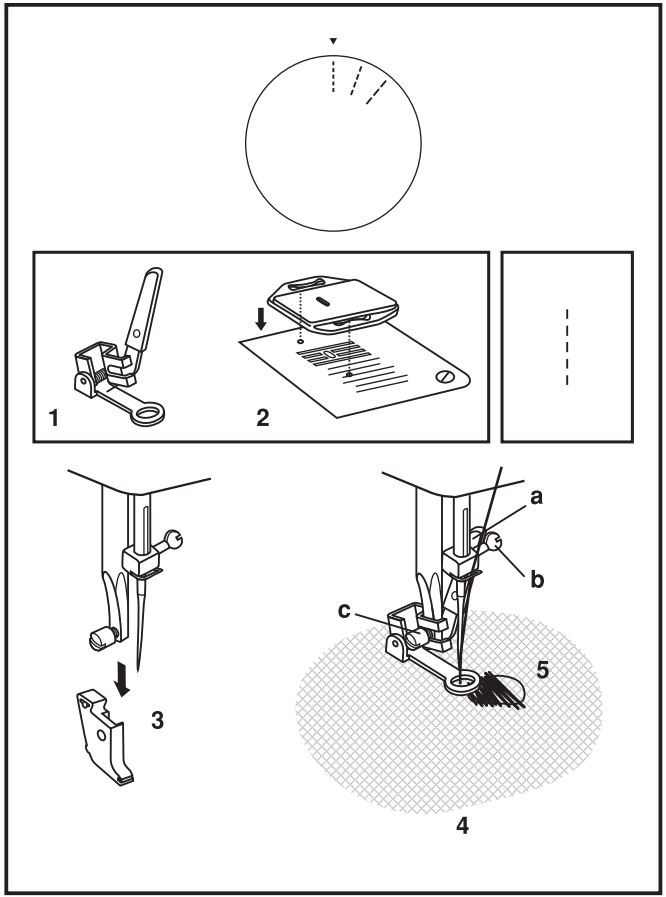

☐ Free Motion Darning, Stippling

* The darning/ embroidery foot is an optional accessory not included with your machine. (1)

Darning:

Install the darning plate. (2)

Remove the presser foot shank. (3)

Attach the darning/ embroidery foot to the presser foot bar. The lever (a) should be behind the needle clamp screw (b). Press the darning/ embroidery foot on firmly from behind with your index finger and tighten the screw (c). (4)

For darning, first sew around the edge of the hole (to secure the threads). (5)

First row: Always work from left to right. Turn work by 90 degrees and sew over previous stitching. A darning hoop is recommended for easier sewing and better results.

Note:
Free motion darning is accomplished without the sewing machine internal feed system. Movement of the fabric is controlled by the operator. It is necessary to coordinate sewing speed and movement of fabric.

Stippling:

Set the machine for straight stitch. Using the optional darning/ embroidery foot will help guide you as you sew, in a meandering fashion to create small curving lines to hold layers of fabric and batting together.

☐ Installing the Removable Extension Table

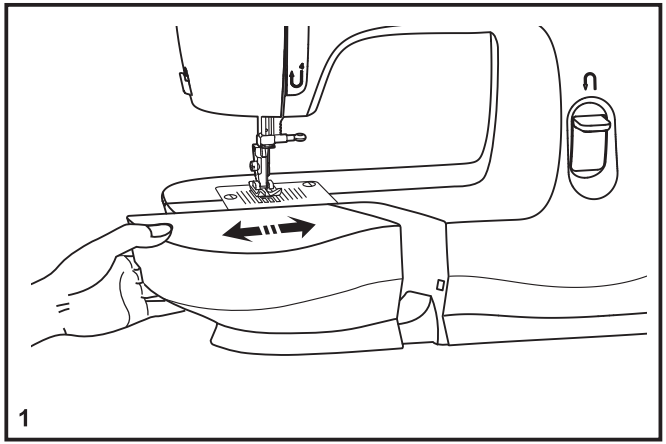

1

Hold the removable extension table horizontally, and push it in the direction of the arrow. (1)

To remove the extension table, pull it toward the left.

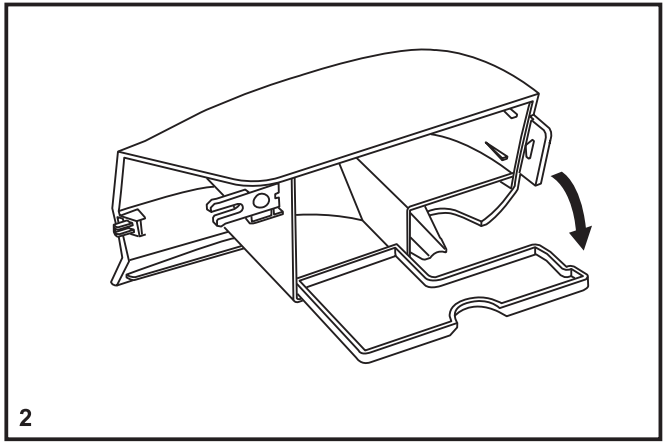

2

The inside of the removable extension table can be utilized as an accessory box.

To open, flip cover down as shown. (2)

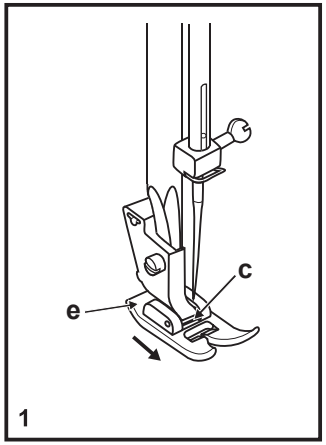

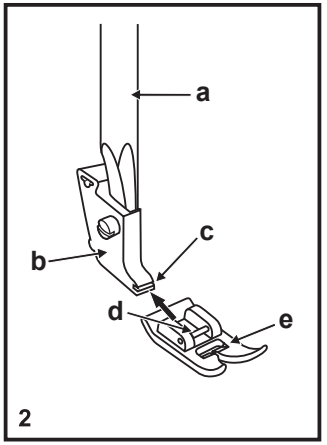

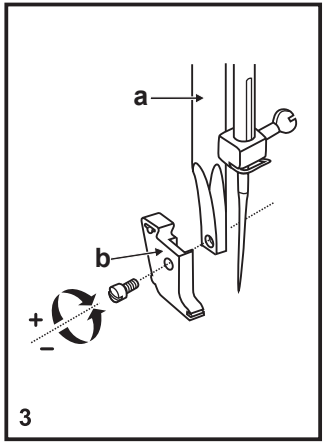

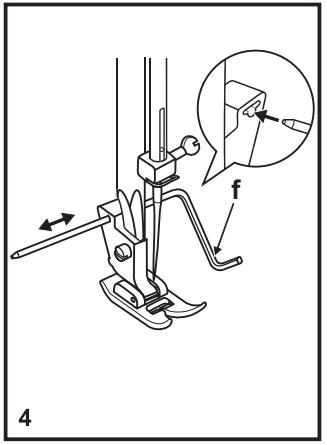

☐ Changing the Presser Foot

Removing the presser foot

Push the presser foot (e) to disengage from the cut-out (c). (1)

Attaching the presser foot

Install the pin (d) of the presser foot (e) into the cut-out (c) of the presser foot holder. (2)

Removing and attaching the presser foot shank

Raise the presser bar (a) with the presser foot lifter.

Remove and attach the presser foot shank (b) as illustrated. (3)

Attaching the edge/ quilting guide

Attach the edge/quilting guide (f) in the slot as illustrated.

Adjust as needed for hems, pleats, quilting, etc. (4)

Attention:
Turn power switch to off ("O") when carrying out any of the above operations!

☐ Needle/ Fabric/ Thread Chart

NEEDLE, FABRIC, THREAD SELECTION GUIDE

NEEDLE SIZE	FABRICS	THREAD
9-11 (70-80)	Lightweight fabrics-thin cottons, voile, silk, muslin, interlocks, cotton knits, tricots, jerseys, crepes, woven polyester, shirt & blouse fabrics.	Light-duty thread in cotton, nylon, polyester or cotton wrapped polyester.
11-14 (80-90)	Medium weight fabrics-cotton, satin, kettlecloth, sailcloth, double knits, lightweight woolens.	Most threads sold are medium size and suitable for these fabrics and needle sizes. Use polyester threads on synthetic materials and cotton on natural woven fabrics for best results. Always use the same thread on top and bottom.
14 (90)	Medium weight fabrics-cotton duck, woolen, heavier knits, terrycloth, denims.	
16 (100)	Heavyweight fabrics-canvas, woolens, outdoor tent and quilted fabrics, denims, upholstery material (light to medium).	
18 (110)	Heavy woolen, overcoat fabrics, upholstery fabrics, some leathers and vinyls.	Heavy duty thread.

IMPORTANT: Match needle size to thread size and weight of fabric.

NEEDLE, FABRIC SELECTION

NEEDLES	EXPLANATION	TYPE OF FABRIC
SINGER® 2020	Standard sharp needles. Sizes range thin to large. 9 (70) to 18 (110).	Natural woven fabrics-wool, cotton, silk, etc. Not recommended for double knits.
SINGER® 2045	Ball point needle, scarfed. 9 (70) to 18 (110).	Natural and synthetic woven fabrics, polyester blends. Knits-polyesters, interlocks, tricot, single and double knits. Also sweater knits, Lycra®, swimsuit fabric, elastic.
SINGER® 2032	Leather needles. 12 (80) to 18 (110).	Leather, vinyl, upholstery. (Leaves smaller hole than standard large needle.)

Note:

1. For best sewing results always use genuine SINGER® needles.
2. Replace needle often (approximately every other garment) and/ or at first thread breakage or skipped stitches.

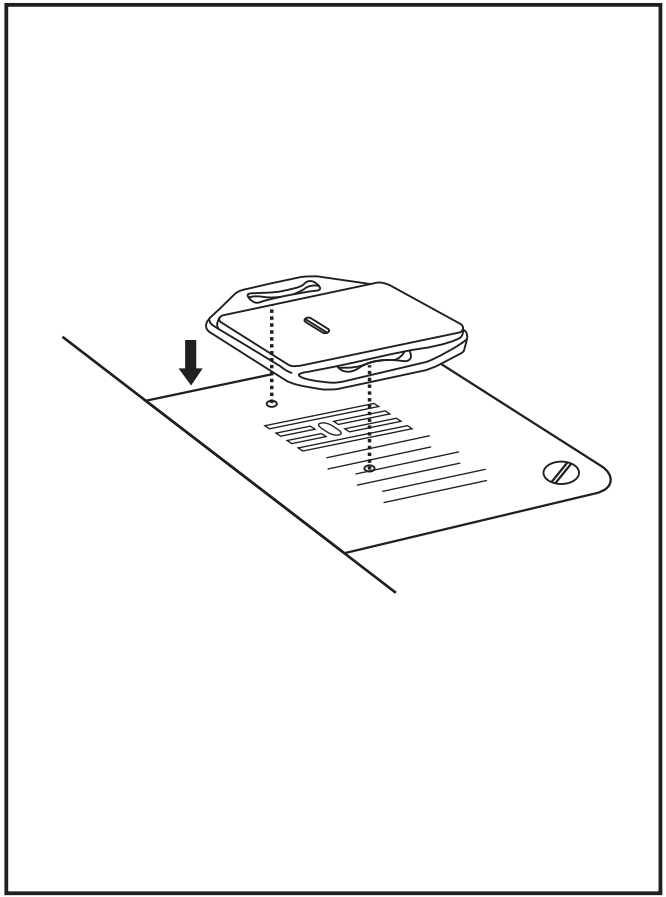

☐ Darning Plate

For certain types of work, (e.g. darning or free-hand embroidery), the darning plate must be used.

Install the darning plate as illustrated.

For normal sewing, remove the darning plate.

For free-motion sewing it is recommended to use a darning/ embroidery foot, available as an optional accessory from authorized SINGER® retailers.

☐ Inserting the Needle

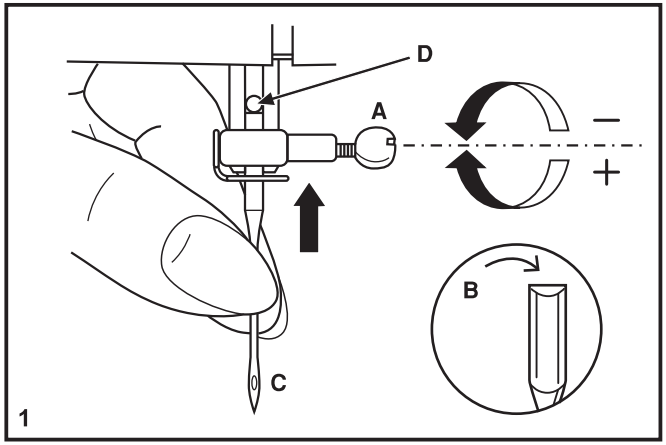

1

Change the needle regularly, especially if it is showing signs of wear and causing problems. For best sewing results always use SINGER® Brand Needles.

Insert the needle as illustrated as follows:

A. Loosen the needle clamp screw and tighten again after inserting the new needle. (1)

B. The flat side of the shaft should be towards the back.

C/D. Insert the needle as far up as it will go.

Attention:
Turn power switch to off (“O”) before inserting or removing the needle.

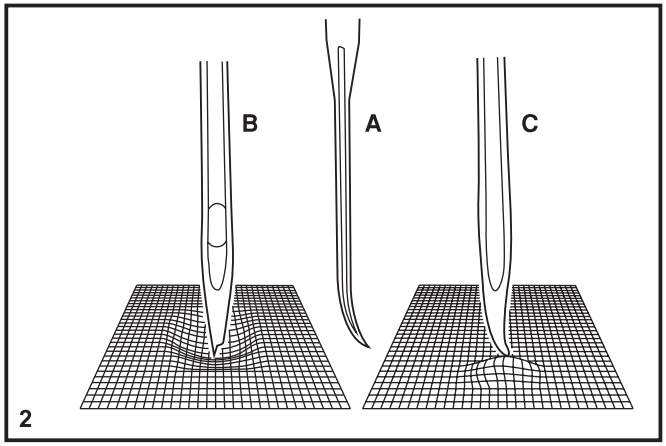

2

Needles must be in perfect condition. (2)

Problems can occur with:

A. Bent needles

B. Damaged points

C. Blunt needles

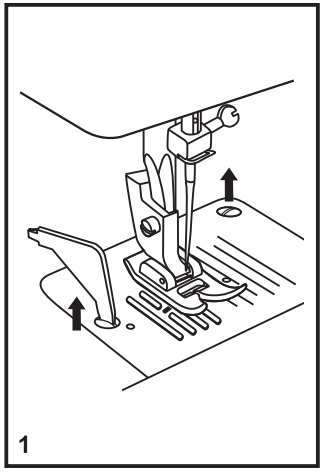

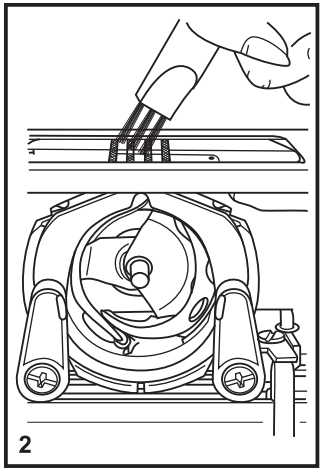

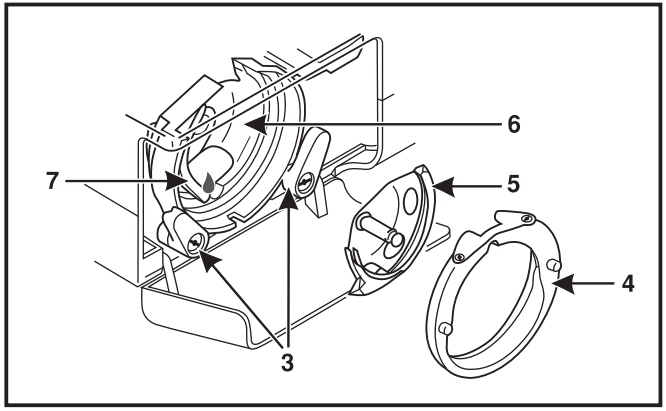

☐ Maintenance

Attention:
Disconnect the machine from the electrical supply by removing the plug from the main socket. When cleaning the machine, it must always be disconnected from the electrical supply.

Remove the needle plate:

Turn the handwheel until the needle is fully raised. Open the hinged front cover and unscrew the needle plate screws with the screw driver. (1)

Cleaning the feed teeth:

Use the brush supplied to clean the whole area. (2)

Cleaning and lubricating the hook:

Remove the bobbin case. Snap the two hook retaining arms (3) outwards. Remove the hook race cover (4) and the hook (5) and clean with a soft cloth. Lubricate at the point (6) (1-2 drops) with sewing machine oil. Turn the handwheel until the hook race (7) is in the left position. Replace the hook (5). Replace the hook race cover and snap back the two hook retaining arms. Insert the bobbin case and bobbin and replace the needle plate.

Important:
Fabric lint and threads must be removed regularly.
Your machine should be serviced at regular intervals at one of our service centers.

☐ Troubleshooting Guide

Problem	Cause	Correction
Upper thread breaks	1. The machine is not threaded correctly. 2. The thread tension is too tight. 3. The thread is too thick for the needle. 4. The needle is not inserted correctly. 5. The thread is wound around the spool holder pin. 6. The needle is damaged.	1. Rethread the machine. 2. Reduce the thread tension. (lower number) 3. Select a larger needle. 4. Remove and reinsert the needle. (flat side towards the back) 5. Remove the reel and wind thread onto reel. 6. Replace the needle.
Lower thread breaks	1. The bobbin case is not inserted correctly. 2. The bobbin case is threaded wrong.	1. Remove and reinsert the bobbin case and pull on the thread. The thread should pull easily. 2. Check both bobbin and bobbin case.
Skipped stitches	1. The needle is not inserted correctly. 2. The needle is damaged. 3. The wrong size or type of needle has been used. 4. The foot is not attached correctly.	1. Remove and reinsert needle. (flat side towards the back) 2. Insert a new needle. 3. Choose a needle to suit the thread and fabric. 4. Check and attach correctly.
Needle breaks	1. The needle is damaged. 2. The needle is not correctly inserted. 3. Wrong needle size for the fabric. 4. The wrong foot is attached.	1. Insert a new needle. 2. Insert the needle correctly. (flat side towards the back) 3. Choose a needle to suit the thread and fabric. 4. Select the correct foot.
Loose stitches	1. The machine is not correctly threaded. 2. The bobbin case is not correctly threaded. 3. Needle/ fabric/ thread combination is wrong. 4. Thread tension wrong.	1. Check the threading. 2. Thread the bobbin case as illustrated. 3. The needle size must suit the fabric and thread. 4. Correct the thread tension.
Seams gather or pucker	1. The needle is too thick for the fabric. 2. The stitch length is incorrectly adjusted. 3. The thread tension is too tight.	1. Select a finer needle. 2. Readjust the stitch length. 3. Loosen the thread tension.
Uneven stitches, uneven feed	1. Poor quality thread. 2. The bobbin case is incorrectly threaded. 3. Fabric has been pulled.	1. Select a better quality thread. 2. Remove bobbin case, thread and insert correctly. 3. Do not pull on the fabric while sewing, let it be drawn through by the machine.
The machine is noisy	1. Lint or oil have collected on the hook or needlebar. 2. The needle is damaged.	1. Clean the hook and feed teeth as described. 2. Replace the needle.
The machine jams	Thread is caught in the hook.	Remove the upper thread and bobbin case, turn the handwheel backwards and forwards by hand and remove the thread.



Please note that on disposal, this product must be safely recycled in accordance with relevant National legislation relating to electrical/electronic products. Do not dispose of electrical appliances as unsorted municipal waste, use separate collection facilities. Contact your local government for information regarding the collection systems available. When replacing old appliances with new ones, the retailer may be legally obligated to take back your old appliance for disposal free of charge.

If electrical appliances are disposed of in landfills or dumps, hazardous substances can leak into the groundwater and get into the food chain, damaging your health and well-being.

We reserve the right to change the machine equipment and the assortment of accessories without prior notice, or make modifications to the performance or design. Such modifications, however, will always be to the benefit of the user and the product.

INTELLECTUAL PROPERTY

Singer, and the Cameo “S” Design are exclusive trademarks of The Singer Company Limited S.à.r.l. or its Affiliates.

471061426 • English ©2019 The Singer Company Limited S.à.r.l. or its Affiliates. All rights reserved.