TCL 505

Quick Start Guide

280074488
Printed in China

User manual
tcl.com

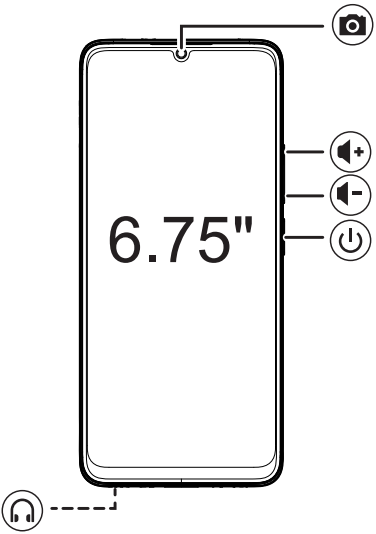
6.75"

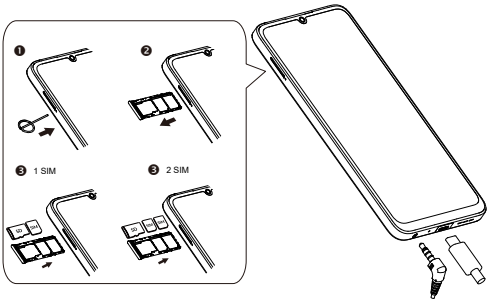
1
2
3 1 SIM
3 2 SIM

Safety and use

Please read this chapter carefully before using your device. The manufacturer disclaims any liability for damage, which may result as a consequence of improper use or use contrary to the instructions contained herein.

- Do not use your device when the vehicle is not safely parked. Using a hand-held device while driving is illegal in many countries.
- Comply with restrictions on use specific to certain places (hospitals, planes, gas stations, schools, etc.).
- Switch the device off before boarding an aircraft.
- Switch the device off when you are in health care facilities, except in designated areas.
- Switch the device off when you are near gas or flammable liquids.

  Strictly obey all signs and instructions posted in a fuel depot, petrol station, or chemical plant, or in any potentially explosive atmosphere when operate your device.
- Turn off your mobile device or wireless device when in a blasting area or in areas posted with notifications requesting "two-way radios" or "electronic devices" are turned off to avoid interfering with blasting operations.

  Please consult your doctor and the device manufacturer to determine if operation of your device may interfere with the operation of your medical device. When the device is switched on, it should be kept at least 15 cm from any medical device such as a pacemaker, a hearing aid, or an insulin pump, etc.
- Do not let children use the device and/or play with the device and accessories without supervision.
- To reduce exposure to radio waves, it is recommended:
  - To use the device under good signal reception conditions as indicated on its screen (four or five bars);
  - To use a hands-free kit;
  - To make reasonable use of the device, particularly for children and adolescents, for example by avoiding night calls and limiting the frequency and duration of calls;
  - Keep the device away from the belly of pregnant women or the lower abdomen of adolescents.
- Do not allow your device to be exposed to adverse weather or environmental conditions (moisture, humidity, rain, infiltration of liquids, dust, sea air, etc.). The manufacturer's recommended operating temperature range is 0°C (32°F) to 40°C (104°F). At over 40°C (104°F) the legibility of the device's display may be impaired, though this is temporary and not serious.
- Use only batteries, battery chargers, and accessories which are compatible with your device model.
- Do not use a damaged device, such as a device with a cracked display or badly dented back cover, as it may cause injury or harm.
- Do not keep device connected to charger with battery fully charged for a long period of time as it can cause overheating and shorten battery life.
- Do not sleep with the device on your person or in your bed. Do not place the device under a blanket, pillow, or under your body, specially when connected to the charger, as this may cause the device to overheat.



PROTECT YOUR HEARING

To prevent possible hearing damage, do not listen at high volume levels for long periods. Exercise caution when holding your device near your ear while the loudspeaker is in use.

Licences

Bluetooth SIG, Inc. licensed and certificated TCL T509K Bluetooth Declaration ID D061527

Wi-Fi Alliance certified

Waste disposal and recycling

Device, accessory and battery must be disposed of in accordance with locally applicable environmental regulations.

This symbol on your device, the battery, and the accessories means that these products must be taken to:



- Municipal waste disposal centres with specific bins.
- Collection bins at points of sale.

They will then be recycled, preventing substances being disposed of in the environment.

In European Union countries: These collection points are accessible free of charge. All products with this sign must be brought to these collection points.

In non-European Union jurisdictions: Items of equipment with this symbol are not to be thrown into ordinary bins if your jurisdiction or your region has suitable recycling and collection facilities; instead they are to be taken to collection points for them to be recycled.

Battery

In accordance with air regulations, the battery of your product is not fully charged. Please charge it first.

- Do not attempt to open the battery (due to the risk of toxic fumes and burns).
- For a device with a non-removable battery, do not attempt to eject or replace the battery.
- Do not puncture, disassemble, or cause a short circuit in a battery.
- For a unibody device, do not attempt to open or puncture the back cover.
- Do not burn or dispose of a used battery or device in household rubbish or store it at temperatures above 60°C (140°F), this can result in an explosion or the leakage of flammable liquid or gas. Similarly, subjecting the battery to extremely low air pressure may result in an explosion or the leakage of flammable liquid or gas. Only use the battery for the purpose for which it was designed and recommended. Never use damaged batteries.

CAUTION: RISK OF EXPLOSION IF BATTERY IS REPLACED BY AN INCORRECT TYPE. DISPOSE OF USED BATTERIES ACCORDING TO THE INSTRUCTIONS.

Charger [1]

Mains powered chargers will operate within the temperature range of: 0°C (32°F) to 40°C (104°F).

The chargers designed for your device meet the standard for safety of information technology equipment and office equipment use. They are also compliant with the ecodesign directive 2009/125/EC. Due to different applicable electrical specifications, a charger you purchased in one jurisdiction may not work in another jurisdiction. They should be used for the purpose of charging only.

Model: CG10A050/UT-681/UT-580

Input Voltage: 100~240V

Input AC Frequency: 50/60Hz

Output Voltage: 5.0V

Output Current: 2.0A

Output Power: 10.0W

[1] If sold with the device, depending on the device you purchased.

Average active efficiency: 79%

No-load power consumption: 0.1W

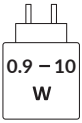

The power delivered by the charger must be between min 0.9 Watts required by the radio equipment, and max 10 Watts in order to achieve the maximum charging speed.

For environmental reasons this package may not include a charger, depending on the device you purchased. This device can be powered with most USB power adapters and a cable with USB Type-C plug.

To correctly charge your device you can use any charger as long as it meets all applicable standards for safety of information technology equipment and office equipment with minimum requirements as above listed.

Please do not use chargers which are not safe or do not meet the above specifications.

Radio Equipment Directive Declaration of Conformity

Hereby, TCL Communication Ltd. declares that the radio equipment of type TCL T509K is in compliance with Directive 2014/53/EU. The full text of the EU declaration of conformity is available at the following internet address: https://www.tcl.com/global/en/EC_DOC

Hereby, TCL Communication Ltd. declares that the radio equipment model number T509K is in compliance with Radio Equipment Regulations 2017 and The Product Security and Telecommunications Infrastructure (Security Requirements for Relevant Connectable Products) Regulations 2023.

The full text of the UK Declaration of Conformity and PSTI Statement of Compliance are available at: https://www.tcl.com/global/en/EC_DOC

The support period of the device can be found at https://www.tcl.com/uk/en/support-mobile/software-security

Information on how to report security issues of the device can be found at https://src.tcl.com/en/index

SAR and radio waves

This device meets international guidelines for exposure to radio waves.

The radio wave exposure guidelines use a unit of measurement known as the Specific Absorption Rate, or SAR. The SAR limit for mobile devices is 2 W/kg for Head SAR and Body-worn SAR, and 4 W/kg for Limb SAR.

When carrying the product or using it while worn on your body, either use an approved accessory such as a holster or otherwise maintain a distance of 5 mm from the body to ensure compliance with RF exposure requirements. Note that the product may be transmitting even if you are not making a device call.

Maximum SAR for this model and conditions under which it was recorded		
Head SAR	GSM 900 + Wi-Fi 5GHz + Bluetooth	1.27 W/kg
Body-worn SAR (5 mm)	GSM 900 + Wi-Fi 2.4GHz	1.65 W/kg
Limb SAR (0 mm)	LTE Band 7 + Wi-Fi 2.4GHz	3.00 W/kg

Frequency bands and maximum radio-frequency power

This radio equipment operates with the following frequency bands and maximum radio-frequency power:

GSM 900MHz: 33.50 dBm

GSM 1800MHz: 30.50 dBm

UMTS B1 (2100MHz): 24.00 dBm

UMTS B8 (900MHz): 24.00 dBm

LTE FDD B1/3/7 (2100/1800/2600MHz): 24.50 dBm

LTE FDD B8/20/28 (900/800/700MHz): 25.00 dBm

LTE TDD B38/40 (2600/2300MHz): 24.50 dBm

Bluetooth 2.4GHz band: 8.89 dBm

Bluetooth LE 2.4GHz band: -3.35 dBm

802.11 b/g/n 2.4GHz band: 17.67 dBm

802.11 a/n/ac 5150 – 5350 MHz: 18.95 dBm

802.11 a/n/ac 5470 – 5725 MHz: 18.74 dBm

802.11 a/n/ac 5725 – 5875 MHz: 13.51 dBm

NFC 13.56 MHz: -22.80 dBuA/m at 10m

Restrictions:

This equipment may be operated in all European countries. The 5150-5250 MHz of Wi-Fi 5GHz can be used indoors and outdoors only when the equipment is not attached to a fixed installation or to the external body of road vehicles, a fixed infrastructure or a fixed outdoor antenna. The 5250-5350 MHz of Wi-Fi 5GHz can be used inside buildings only. The 5470-5725 MHz band of Wi-Fi 5GHz can't be used in road vehicles, trains, aircraft or UAS (Unmanned Aircraft System) scenarios for the following countries:

	BE	BG	CZ	DK	DE	EE	IE	EL	ES	FR	HR
	IT	CY	LV	LT	LU	HU	MT	NL	AT	PL	PT
	RO	SI	SK	FI	SE	NO	IS	LI	CH	TR	UK (NI)

	Third countries						
	UK						

This radio equipment is also subject to certain restrictions when it is placed on the market in United Kingdom (UK):

In accordance with the relevant statutory requirements in the UK, the 5150 to 5350 MHz frequency range is restricted to indoor use in the United Kingdom.

General information

- **Internet address:** tcl.com
- **Service Hotline and Repair Center:** Go to our website https://www.tcl.com/global/en/support-mobile, or open Support Center application on your device to find your local hotline number and authorized repair center for your country.
- **Full User Manual:** Please go to tcl.com (tcl.com - Support – Mobile – SELECT A MODEL) to download the full user manual of your device.

  On our website, you will find our FAQ (Frequently Asked Questions) section. You can also contact us by email to ask any questions you may have.
- **Manufacturer:** TCL Communication Ltd.
- **Address:** 5/F, Building 22E, 22 Science Park East Avenue, Hong Kong Science Park, Shatin, NT, Hong Kong
- **Electronic labelling path:** Touch **Settings > Regulatory & safety** or press *#07#, to find more information about labelling [1].

[1] Depending on country.

Software update

The connection costs associated with finding, downloading and installing software updates for your mobile device's operating system will vary depending on the offer you have subscribed to from your telecommunications operator. Updates will be downloaded automatically but their installation will require your approval.

Refusing or forgetting to install an update can affect your device's performance and, in the event of a security update, expose your device to security vulnerabilities. For more information about software update, please go to tcl.com

Privacy statement of device usage

Any personal data you shared with TCL Communication Ltd. will be handled in accordance with our Privacy Notice. You can check our Privacy Notice by visiting our website: https://www.tcl.com/global/en/communication-privacy-policy

Disclaimer

There may be certain differences between the user manual description and the device's operation, depending on the software release of your device or specific operator services. TCL Communication Ltd. shall not be held legally responsible for such differences, if any, nor for their potential consequences, which responsibility shall be borne by the operator exclusively.

Limited warranty

As the consumer You may have legal (statutory) rights that are in addition to those set out in this Limited Warranty offered by Manufacturer voluntarily, such as the consumer laws of the country in which You live ("Consumer Rights"). This Limited Warranty sets out certain situations when the Manufacturer will, or will not, provide a remedy for the TCL device. This Limited Warranty does not limit or exclude any of your Consumer Rights relating to the TCL device.

For more information about limited warranty, please go to
https://www.tcl.com/global/en/warranty

In case of any defect of your device which prevents you from normal use thereof, you must immediately inform your vendor and present your device with your proof of purchase.