Camelion®

ENGINEERING DATA SHEET

LITHIUM BUTTON CELL

Document Title: PB041216

CR1216

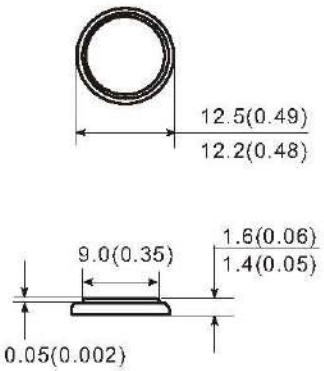

Unit: mm(inch)

Chemical System : Lithium/Manganese Dioxide
IEC Name: CR 1216
ANSI/NEDA: 5034LC
Camelion Model : CR1216
Average Weight : 0.7g
Dimension (Ø x H) : $12.5^{-0.3}$x$1.6^{-0.2}$mm
$0.49^{-0.01}$x$0.06^{-0.01}$inch
Terminals: Flat
Nominal Voltage : 3.0Volts
Capacity : 25mAh
(20±2℃, Rated at 62kΩ to 2.00V)
Standard Discharge Current: 0.1mA
Max. Continuous Discharge Current: 0.2mA
Max. Pulse Discharge Current: 5.0mA
Operating Temperature: -20℃~60℃
Storage Conditions
Temperature: -20℃~45℃
Relative Humidity: 60±15%
Cross Reference: E-CR1216(Energizer),
DL1216(Duracell),KECR1216(Rayovac)

Discharge characteristics

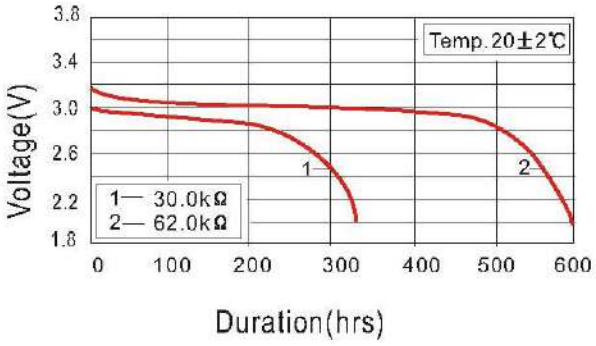

Temperature Characteristics

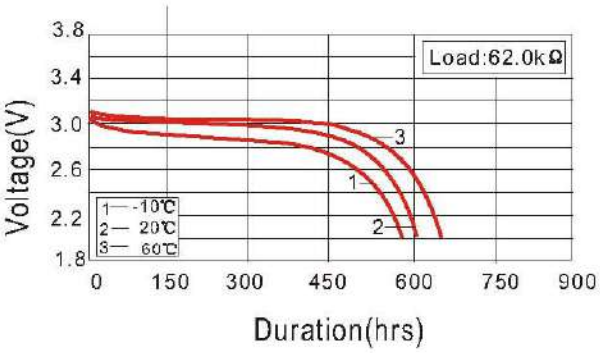

Load-capacity characteristic

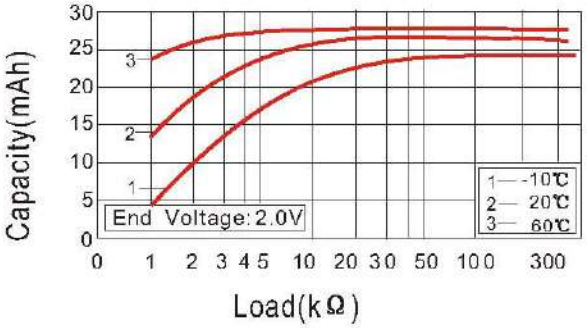

Pulse Discharge Characteristic

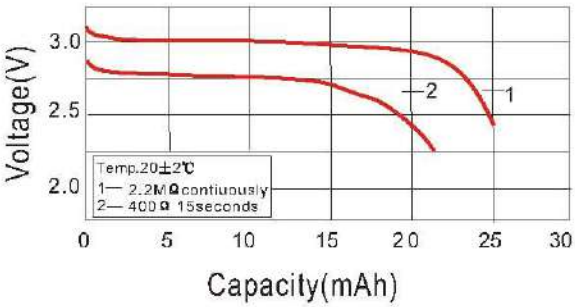

Notice:
Environmental elements comply with RoHS requirements. This information is subject to change without prior notice and for reference only. It should not be used as a basis for a product guarantee or warranty . For additional information, please consult your nearest Camelion Sales Office or Distributor or visit our website at: www.camelionbattery.com.