Camelion®

ENGINEERING DATA SHEET

LITHIUM BUTTON CELL

Document Title: PB041620

CR1620

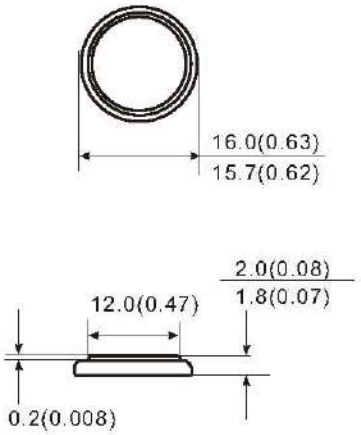

Unit: mm(inch)

Chemical System : Lithium/Manganese Dioxide
IEC Name: CR1620
ANSI/NEDA: 5009LC
Camelion Model: CR1620
Average Weight : 1.3g
Dimension (Ø x H) : $16.0^{-0.3}$x$2.0^{-0.2}$mm
$0.63^{-0..01}$x$0.08^{-0.01}$inch
Terminals: Flat
Nominal Voltage : 3.0Volts
Capacity : 90mAh
(20±2℃, Rated at 0.1mA to 2.00V)
Standard Discharge Current: 0.1mA
Max. Continuous Discharge Current: 0.3mA
Max. Pulse Discharge Current: 8.0mA
Operating Temperature: -20℃~60℃
Storage Conditions
Temperature: -20℃~45℃
Relative Humidity: 60±15%
Cross Reference: E-CR1620(Energizer), DL1620(Duracell),KECR1620(Rayovac)

Discharge characteristics

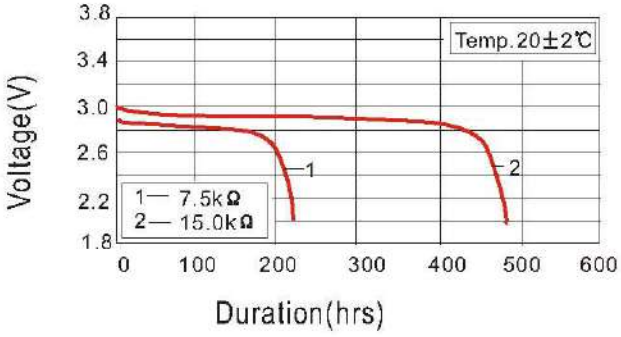

Temperature Characteristics

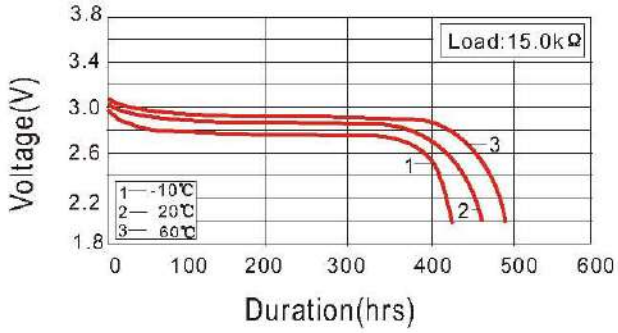

Load-capacity characteristic

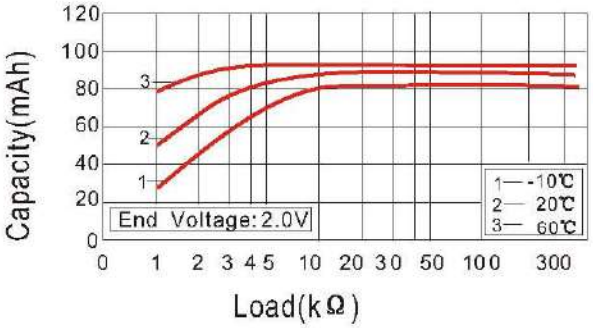

Pulse Discharge Characteristic

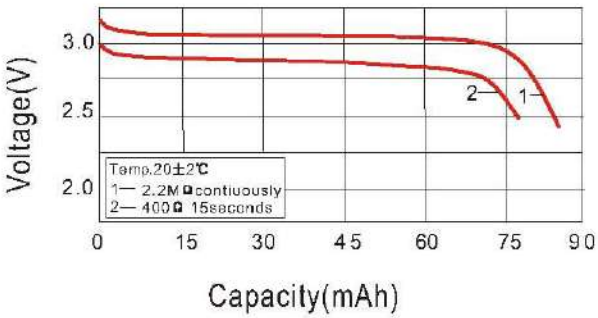

Notice:
Environmental elements comply with RoHS requirements. This information is subject to change without prior notice and for reference only. It should not be used as a basis for a product guarantee or warranty . For additional information, please consult your nearest Camelion Sales Office or Distributor or visit our website at: www.camelionbattery.com.